United Nations ECE/TRANS/WP.29/1127

Economic and Social Council

Distr.: General
1 March 2018

Original: English

Economic Commission for Europe

Inland Transport Committee

World Forum for Harmonization of Vehicle Regulations

Consolidated Resolution on the common specification of light source categories (R.E.5)

The text reproduced below was prepared by the Working Party on Lighting and Light-Signalling (GRE) and was adopted by the World Forum for Harmonization of Vehicle Regulations (WP.29) at its November 2016 session based on ECE/TRANS/WP.29/2016/111.

Consolidated Resolution on the common specification of light source categories (R.E.5)

Status table

This consolidated version of the Resolution contains all provisions and amendments adopted so far by the World Forum for Harmonization of Vehicle Regulations (WP.29) and is valid from the date as indicated in the following table until the date on which the next revision of this Resolution becomes valid:

Version of the Resolution	*Date * as from which the version is valid*	*Adopted by WP.29*		*Clarification*
		Session No.	*Amendment document No.*	
Original	22.06.2017	170	ECE/TRANS/WP.29/2016/111	Based upon Annexes 1 of Regulations: • No. 37, up to and including Supplement 44 • No. 99, up to and including Supplement 11 • No. 128, up to and including Supplement 5

* This date is the date of adoption of the amendment to the Resolution by WP.29 or the date of entering into force of an amendment to Regulation No. 37, 99 or 128 adopted by the Administrative Committee AC.1 as a package with the amendment to the Resolution in the same session of WP.29.

Contents

Preamble

1. The World Forum for Harmonization of Vehicle Regulations (WP.29),

2. DESIRING to harmonize technical requirements while ensuring high levels of safety, environmental protection, energy efficiency and anti-theft performance of wheeled vehicles, equipment and parts which can be fitted and/or be used on wheeled vehicles,

3. DESIRING to facilitate the trade of wheeled vehicles, equipment and parts with harmonized performance requirements among its participating countries,

4. BEARING IN MIND that the assessment of compliance with the technical prescriptions of Regulations concerning lighting and light signalling requires the specification of light sources in light source category sheets and/or information on which light source categories are applicable or excluded for use in particular lamps,

5. DESIRING to simplify the regulatory process for all stakeholders, while the technical specifications of the characteristics of light source categories and/or information on which light source categories are applicable or excluded for use in particular lamps, are subject of evaluation by the WP.29 Working Party on Lighting and Light-Signalling (GRE),

6. DECIDED that the specification of light sources in light source category sheets and/or the information which light source categories are applicable or excluded for use in particular lamps, are issued in a Resolution on the specification of light source categories.

Introduction

1. This Resolution finds its origin in the 1958 Agreement and its attached Regulations:

   - Regulation No. 37 "Filament lamps", up to and including Supplement No. 44;
   - Regulation No. 99 "Gas-discharge light sources", up to and including Supplement No. 11;
   - Regulation No. 128 "Light emitting diodes (LED) light sources", up to and including Supplement No. 5.

2. This Resolution is intended for reference from and approval of light sources according to:

   - Regulation No. 37 "Filament light sources";[**]
   - Regulation No. 99 "Gas-discharge light sources";
   - Regulation No. 128 "LED light sources".

3. This Resolution may also serve as a reference for other Regulations or standards.

[**] The title was harmonised with the other light source Regulations on the occasion of introduction of this Resolution.

1. Scope

This Resolution contains the specifications of light source categories and/or information on which light source categories are applicable or excluded for use in particular lamps.

In the case of "design to conform" requirements, reference should be made to values of characteristics of light sources of normal production, while values for standard (high accuracy) light sources may be ignored.

2. Definitions

2.1. General

2.1.1. "*Light source*" means one or more elements for visible radiation, with a base for mechanical and electrical connection, possibly assembled with one or more components to control the elements for visible radiation;

2.1.1.1. "*Filament light source*" means a light source where the only element for visible radiation is one or more filaments producing thermal radiation;

2.1.1.2. "*Gas-discharge light source*" means a light source where the only element for visible radiation is a discharge arc producing electroluminescence;

2.1.1.3. "*Light-emitting diode (LED) light source*" means a light source where the only element for visible radiation is one or more solid state junctions producing electroluminescence possibly completed with one or more elements for fluorescence-based conversion.

2.1.2. "*Standard (étalon) light source*" means a special light source used for the testing of lighting and light-signalling devices. It has reduced tolerances for dimensional, electrical and photometric characteristics as specified on the relevant data sheet.

2.1.3. "*Ballast*" means one or more components, either between supply and light source or integrated with a light source, to control the electrical current of the gas-discharge light source;

2.1.4. "*Objective value(s)*" means design value(s) to be achieved within specified tolerances when the light source or the ballast of the gas discharge light source is energized at specified test voltage(s)

2.2. Dimensional characteristics

2.2.1 "*Reference axis*" means an axis defined with reference to the cap and to which certain dimensions of the light source are referred.

2.2.2. "*Reference plane*" means a plane defined with reference to the cap and to which certain dimensions of the light source are referred.

2.2.3. "*Light centre*" means a point that represents the origin of the light emitted.

2.2.4. "*Light centre length*" means the distance between the reference plane and the light centre.

2.2.5. "*Viewing axis on to the light source*" means an axis through the nominal light centre at defined polar and azimuthal angle.

2.3. Electrical characteristics

2.3.1. "*Test voltage*" means the voltage, at the input terminals of the light source or at the terminals of the ballast for the gas-discharge light source, for which the electrical and photometric characteristics of the light source are intended and are to be tested.

2.3.2. "*Rated voltage*" means the voltage (in volts) marked on the light source or on the ballast.

2.3.3. "*Rated wattage*" means the wattage marked on the light source or on the ballast.

2.4. Photometric characteristics

2.4.1. "*Reference luminous flux*"means an accurately specified luminous flux value of a standard light source serving as a reference for the optical characteristics of a lighting or light signalling device.

2.4.2. "*Measuring luminous flux*"means specified value of the luminous flux for testing a filament light source with an internal shield to produce the cut-off.

2.4.3. "*Cumulative luminous flux"* means the luminous flux emitted by the light source under operating conditions, within a cone enclosing a specified solid angle and centred on the reference axis[1].

2.4.4. "*Normalized luminous intensity*" means luminous intensity divided by the luminous flux of the light source.

3. Light source categories and their use

3.1. Filament light sources

Characteristics* of categories of filament light sources as listed below are shown in Annex 1.

Luminous flux values in the light source category sheets concern white light unless otherwise specified in these sheets.

List of categories of filament light sources, grouped according to restrictions on use and their sheet numbers:

Group 1				
Filament light source categories (or types within these categories) without general restrictions:				
	Category	*Note(s)*	*Sheet number(s)*	
	H1	*[6]	H1/1 to 3	
	H3	*[6]	H3/1 to 4	
	H4		H4/1 to 5	
	H7		H7/1 to 4	
	H8		H8/1 to 4	
	H8B		H8/1 to 4	
	H9	*[3]	H9/1 to 4	
	H9B	*[3]	H9/1 to 4	

[1] Based on term 17-267 from CIE standard *CIE S 017/E:2011: ILV: International Lighting Vocabulary*, online version *eILV*

Group 1				
Filament light source categories (or types within these categories) without general restrictions:				
	Category	*Note(s)*	*Sheet number(s)*	
	H10		H10/1 to 3	
	H11		H11/1 to 4	
	H11B		H11/1 to 4	
	H13		H13/1 to 4	
	H15		H15/1 to 5	
	H16		H16/1 to 4	
	H16B		H16/1 to 4	
	H17		H17/1 to 6	
	H18		H18/1 to 4	
	H19		H19/1 to 5	
	H20		H20/1 to 4	
	H21W	*[2]	H21W/1 to 2	
	H27W/1		H27W/1 to 3	
	H27W/2		H27W/1 to 3	
	HB3		HB3/1 to 4	
	HB4		HB4/1 to 4	
	HIR2		HIR2/1 to 3	
	HS1	*[6]	HS1/1 to 5	
	HS5	*[5]	HS5/1 to 4	
	PSX24W	*[2]	P24W/1 to 3	
	PSX26W	*[2]	PSX26W1 to 3	
	S2	*[5],*[6]	S1/S2/1 to 2	

Group 2				
Filament light source categories (or types within these categories) only for use in signalling lamps, cornering lamps, reversing lamps and rear registration plate lamps:				
	Category	*Note(s)*	*Sheet number(s)*	
	C5W	*[6]	C5W/1	
	H6W		H6W/1	
	H10W/1		H10W/1 to 2	
	HY6W		H6W/1	
	HY10W		H10W/1 to 2	
	HY21W		H21W/1 to 2	
	P13W		P13W/1 to 3	
	P21W	*[6]	P21W/1 to 2	
	P21/4W		P21/4W/1	(P21/5W/2 to 3)
	P21/5W	*[6]	P21/5W/1 to 3	

Group 2

Filament light source categories (or types within these categories) only for use in signalling lamps, cornering lamps, reversing lamps and rear registration plate lamps:

	Category	*Note(s)*	*Sheet number(s)*	
	P27W		P27W/1 to 2	
	P27/7W		P27/7W/1 to 3	
	PR21W		PR21W/1	(P21W/2)
	PR21/5W		PR21/5W/1	(P21/5W/2 to 3)
	PS19W		P19W/1 to 3	
	PS24W		P24W/1 to 3	
	PSY19W		P19W/1 to 3	
	PSY24W		P24W/1 to 3	
	PW13W		P13W/1 to 3	
	PW16W		PC16W/1 to 3	
	PWR16W		PC16W/1 to 3	
	PWY16W		PC16W/1 to 3	
	PW19W		P19W/1 to 3	
	PWR19W		P19W/1 to 3	
	PWY19W		P19W/1 to 3	
	PW24W		P24W/1 to 3	
	PWR24W		P24W/1 to 3	
	PWY24W		P24W/1 to 3	
	PY21W		PY21W/1	(P21W/2)
	PY21/5W		PY21/5W/1 to 3	
	PY24W		P24W/1 to 3	
	PY27/7W		PY27/7W/1	(P27/7W/2 to 3)
	R5W	*[6]	R5W/1	
	R10W	*[6]	R10W/1	
	RR5W		R5W/1	
	RR10W		R10W/1	
	RY10W	*[6]	R10W/1	
	T4W	*[6]	T4W/1	
	W2.3W		W2.3W/1	
	W3W	*[6]	W3W/1	
	W5W	*[6]	W5W/1	
	W10W	*[6]	W10W/1	
	W15/5W		W15/5W/1 to 3	
	W16W		W16W/1	
	W21W		W21W/1 to 2	
	W21/5W		W21/5W/1 to 3	
	WR5W		W5W/1	

Group 2				
Filament light source categories (or types within these categories) only for use in signalling lamps, cornering lamps, reversing lamps and rear registration plate lamps:				
	Category	*Note(s)*	*Sheet number(s)*	
	WR21/5W		WR21/5W/1	(W21/5W/2 to 3)
	WT21W		WT21W/1 to 2	
	WT21/7W		WT21/7W/1 to 3	
	WTY21W		WT21W/1 to 2	
	WTY21/7W		WT21/7W/1 to 3	
	WY5W	*[6]	W5W/1	
	WY10W	*[6]	W10W/1	
	WY16W		W16W/1	
	WY21W		WY21W/1 to 2	

Group 3				
Filament light source categories (or types within these categories) only for use in lamps as replacement parts for lamps on vehicles in use originally equipped with such lamps:				
	Category	*Note(s)*	*Sheet number(s)*	*From date onwards***
	C5W	*[7], *[8]	C5W/1	26 July 2013
	C21W	*[8]	C21W/1 to 2	11 June 2008
	H1	*[7]	H1/1 to 3	26 July 2013
	H3	*[7]	H3/1 to 4	26 July 2013
	H12		H12/1 to 3	15 July 2015
	H13A		H13/1 to 4	15 July 2015
	H14		H14/1 to 4	26 July 2013
	HB3A		HB3/1 to 4	15 July 2018
	HB4A		HB4/1 to 4	15 July 2018
	HIR1	*[3]	HIR1/1 to 3	15 July 2015
	HS1	*[7]	HS1/1 to 5	26 July 2013
	HS2	*[7] *[6]	HS2/1 to 3	26 July 2013 1 September 2018
	HS5A	*[5]	HS5A/1 to 3	1 September 2018
	HS6	*[4]	HS6/1 to 4	15 July 2018
	P19W	*[8]	P19W/1 to 3	28 October 2016
	P21W	*[7], *[8]	P21W/1 to 2	26 July 2013
	P21/5W	*[7], *[8]	P21/5W/1 to 3	26 July 2013
	P24W	*[8]	P24W/1 to 3	1 September 2018
	PC16W	*[8]	PC16W/1 to 3	28 October 2016
	PCR16W	*[8]	PC16W/1 to 3	28 October 2012
	PCY16W	*[8]	PC16W/1 to 3	28 October 2016
	PR19W	*[8]	P19W/1 to 3	28 October 2012

Group 3				
Filament light source categories (or types within these categories) only for use in lamps as replacement parts for lamps on vehicles in use originally equipped with such lamps:				
	Category	*Note(s)*	*Sheet number(s)*	*From date onwards***
	PR21/4W	*[8]	PR21/4W/1 ; (P21/5W/2 to 3)	15 July 2015
	PR24W	*[8]	P24W/1 to 3	28 October 2012
	PR27/7W	*[8]	PR27/7W/1 ; (P27/7W/2 to 3)	15 July 2015
	PSR19W	*[8]	P19W/1 to 3	28 October 2012
	PSR24W	*[8]	P24W/1 to 3	28 October 2012
	PX24W	*[2]	P24W/1 to 3	1 September 2018
	PY19W	*[8]	P19W/1 to 3	28 October 2016
	R2		R2/1 to 3	11 June 2008
	R5W	*[7], *[8]	R5W/1	26 July 2013
	R10W	*[7], *[8]	R10W/1	26 July 2013
	RY10W	*[7], *[8]	R10W/1	26 July 2013
	S1		S1/S2/1 to 2	11 June 2008
	S2	*[7]	S1/S2/1 to 2	26 July 2013
	S3		S3/1	26 July 2013
	T1.4W	*[8]	T1.4W/1	15 July 2015
	T4W	*[7], *[8]	T4W/1	26 July 2013
	W3W	*[7], *[8]	W3W/1	26 July 2013
	W5W	*[7], *[8]	W5W/1	26 July 2013
	W10W	*[7], *[8]	W10W/1	26 July 2013
	WP21W	*[8]	WP21W/1 to 2	1 September 2018
	WPY21W	*[8]	WP21W/1 to 2	1 September 2018
	WY2.3W	*[8]	WY2.3W/1	15 July 2015
	WY5W	*[7], *[8]	W5W/1	15 July 2014
	WY10W	*[7], *[8]	W10W/1	26 July 2013

* Tables, Electrical and Photometric characteristics:

Voltage is expressed in V;

Wattage is expressed in W;

Luminous flux is expressed in lm.

In a case of a category of filament light source where more than one value of reference luminous flux is specified, the value at approximately 12 V for a lighting device and 13.5 V for a light-signalling device shall be applied unless otherwise specified by the regulation used for the device.

*[2] Not for use in passing beam headlamps.

*[3] Not for use in front fog lamps marked "B" as defined in Regulation No. 19.

*[4] Not for use in Regulation No. 112 headlamps.

*5 Not for use in headlamps other than Regulation No. 113 class C headlamps.

*6 All types except from 6 V type.

*7 6 V types only.

*8 Only for use in signalling lamps, cornering lamps, reversing lamps and rear registration plate lamps.

** From the original version of this Resolution onwards, this date is 1 September following the date of adoption of (the amendment to) this Resolution by WP.29, plus a multiple of 12 months thereafter.

3.2. Gas-discharge light sources

Characteristics of categories of gas-discharge light sources as listed below are shown in Annex 2.

Luminous flux values in the light source category sheets concern white light unless otherwise specified in these sheets.

List of categories of gas-discharge light sources, grouped according to restrictions on use and their sheet numbers:

Gas-discharge light source categories only for use in passing beam, driving beam and cut-off front fog lamps:			
	Category		*Sheet number(s)*
	D1R		DxR/1 to 7
	D1S		DxS/1 to 6
	D2R		DxR/1 to 7
	D2S		DxS/1 to 6
	D3R		DxR/1 to 7
	D3S		DxS/1 to 6
	D4R		DxR/1 to 7
	D4S		DxS/1 to 6
	D5S		D5S/1 to 5
	D6S		D6S/1 to 5
	D8R		D8R/1 to 6
	D8S		D8S/1 to 5
	D9S		D9S1 to 5

3.3. LED light sources

Characteristics of categories of LED light sources as listed below as shown in Annex 3.

Luminous flux values in the light source category sheets concern white light unless otherwise specified in these sheets.

List of categories of LED light sources, grouped according to restrictions on use and their sheet numbers:

"RESERVED" *Group 1*				
LED light source categories without general restrictions:				
	Category		*Sheet number(s)*	

Group 2				
LED light source categories only for use in signalling lamps, cornering lamps, reversing lamps and rear registration plate lamps:				
	Category		*Sheet number(s)*	
	LR1		LR1/1 to 5	
	LW2		LW2/1 to 5	
	LR3A		L3/1 to 6	
	LR3B		L3/1 to 6	
	LW3A		L3/1 to 6	
	LW3B		L3/1 to 6	
	LY3A		L3/1 to 6	
	LY3B		L3/1 to 6	
	LR4A		LR4/1 to 5	
	LR4B		LR4/1 to 5	
	LR5A		L5/1 to 6	
	LR5B		L5/1 to 6	
	LW5A		L5/1 to 6	
	LW5B		L5/1 to 6	
	LY5A		L5/1 to 6	
	LY5B		L5/1 to 6	

Annex 1

Sheets for filament light sources

List of sheets for filament light sources and their sequence in this annex:

Sheet number(s)
C5W/1
C21W/1 to 2
H1/1 to 3
H3/1 to 4
H4/1 to 5
H7/1 to 4
H8/1 to 4
H9/1 to 4
H10/1 to 3
H11/1 to 4
H12/1 to 3
H13/1 to 4
H14/1 to 4
H15/1 to 5
H16/1 to 4
H17/1 to 6
H18/1 to 4
H19/1 to 5
H20/1 to 4
H6W/1
H10W/1 to 2
H21W/1 to 2
H27W/1 to 3
HB3/1 to 4
HB4/1 to 4
HIR1/1 to 3
HIR2/1 to 3
HS1/1 to 5
HS2/1 to 3
HS5/1 to 4
HS5A/1 to 3
HS6/1 to 4
P13W/1 to 3
P19W/1 to 3
P21W/1 to 2

Sheet number(s)
P21/4W/1
P21/5W/1 to 3
P24W/1 to 3
P27W/1 to 2
P27/7W/1 to 3
PC16W/1 to 3
PR21W/1
PR21/4W/1
PR21/5W/1
PR27/7W/1
PSX26W/1 to 3
PY21W/1
PY21/5W/1 to 3
PY27/7W/1
R2/1 to 3
R5W/1
R10W/1
S1/S2/1 to 2
S3/1
T1.4W/1
T4W/1
W2.3W/1
W3W/1
W5W/1
W10W/1
W15/5W/1 to 3
W16W/1
W21W/1 to 2
W21/5W/1 to 3
WP21W/1 to 2
WR21/5W/1
WT21W/1 to 2
WT21/7W/1 to 3
WY2.3W/1
WY21W/1 to 2

Category C5W **Sheet C5W/1**

The drawings are intended only to illustrate the essential dimensions (in mm) of the filament light source

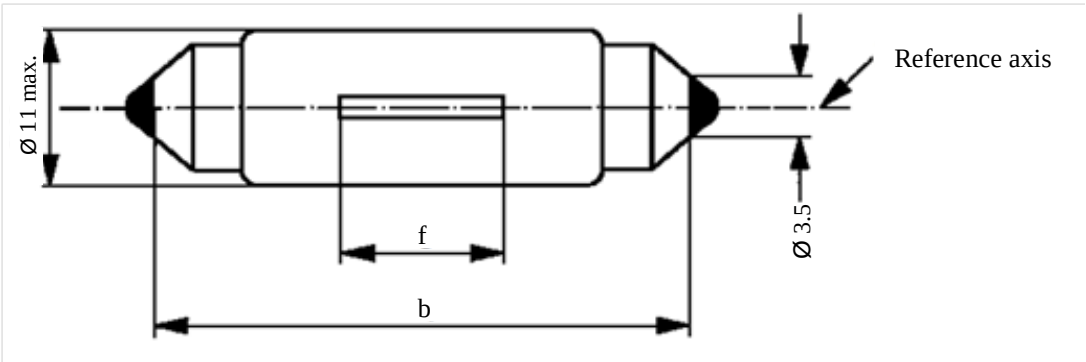

Dimensions in mm		*Filament light sources of normal production*			*Standard filament light source*
		Min.	*Nom.*	*Max.*	
b [1/]		34.0	35.0	36.0	35.0 ± 0.5
f [2/,3/]		7.5 [4/]		15 [5/]	9 ± 1.5
Cap SV8.5 in accordance with IEC Publication 60061 (sheet 7004-81-4)					
Electrical and photometric characteristics					
Rated values	Volts	6	12	24	12
	Watts	5			5
Test voltage	Volts	6.75	13.5	28.0	13.5
Objective values	Watts	5.5 max.		7.7 max.	5.5 max.
	Luminous flux	45 ± 20 %			
Reference luminous flux: 45 lm at approximately 13.5 V					

1/ This dimension corresponds to a distance between two apertures of 3.5 mm diameter each bearing against one of the caps.

2/ The filament shall be housed in a cylinder 19 mm long co-axial with the filament light source and placed symmetrically about the filament light source centre.
The diameter of the cylinder is for 6 V and 12 V filament light sources: d + 4 mm (for standard filament light sources: d + 2 mm) and for 24 V filament light sources: d + 5 mm, "d" being the nominal diameter of the filament as stated by the manufacturer.

3/ The deviation of the filament centre from the centre of the filament light source shall not be more than ±2.0 mm (for standard filament light sources: ±0.5 mm) measured in the direction of the reference axis.

4/ 4.5 mm for 6 V filament light sources.

5/ 16.5 mm for 24 V filament light sources.

Category C21W **Sheet C21W/1**

The drawings are intended only to illustrate the essential dimensions (in mm) of the filament light source

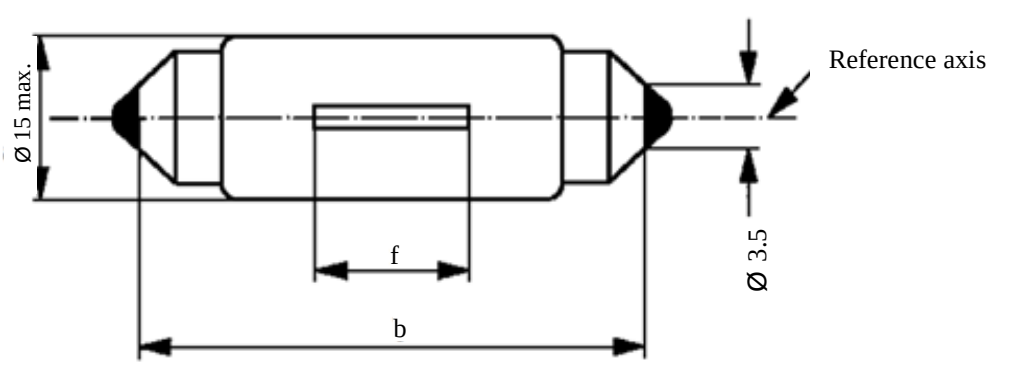

Dimensions in mm		*Filament light sources of normal production*			*Standard filament light source*
		Min.	*Nom.*	*Max.*	
b [1/]		40.0	41.0	42.0	41.0 ± 0.5
f [2/]		7.5		10.5	8 ± 1.0
Cap SV8.5 in accordance with IEC Publication 60061 (sheet 7004-81-4)					
Electrical and photometric characteristics					
Rated values	Volts	12			12
	Watts	21			21
Test voltage	Volts	13.5			13.5
Objective values	Watts	26.5 max.			26.5 max.
	Luminous flux	460 ± 15 %			
Reference luminous flux: 460 lm at approximately 13.5 V					

1/ This dimension corresponds to a distance between two apertures of 3.5 mm diameter.
2/ The position of the filament is checked by means of a "Box system"; sheet C21W/2.

Category C21W **Sheet C21W/2**

Screen projection requirements

This test is used to determine, by checking whether the filament is correctly positioned relative to the reference axis and to the centre of the filament light source's length, whether a filament light source complies with the requirements.

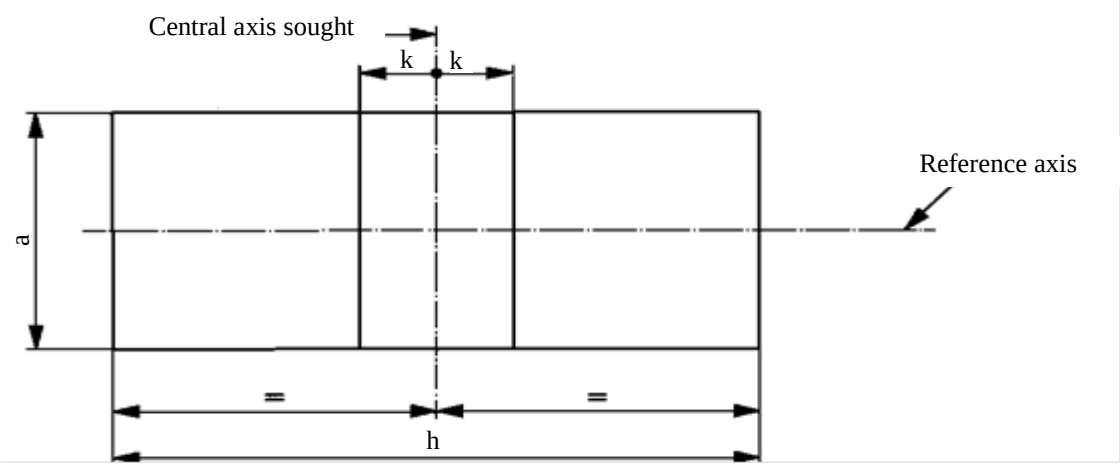

12 V	*a*	*h*	*k*
Filament light sources of normal production	4.0 + d	14.5	2.0
Standard filament light source	2.0 + d	14.5	0.5

d = nominal filament diameter as stated by the manufacturer.

Test procedure and requirements

1. The filament light source is placed in a holder (socket) capable of being so rotated through 360° about the reference axis that the front elevation is seen on the screen on to which the image of the filament is projected. The reference plane on the screen shall coincide with the centre of the filament light source. The central axis sought on the screen shall coincide with the centre of the filament light source length.

2. Front elevation

2.1. The projection of the filament shall lie entirely within the rectangle when the filament light source is rotated through 360°.

2.2. The centre of the filament shall not be offset by more than distance "k" from the central axis sought.

The drawings are intended only to illustrate the essential dimensions (in mm) of the filament light source

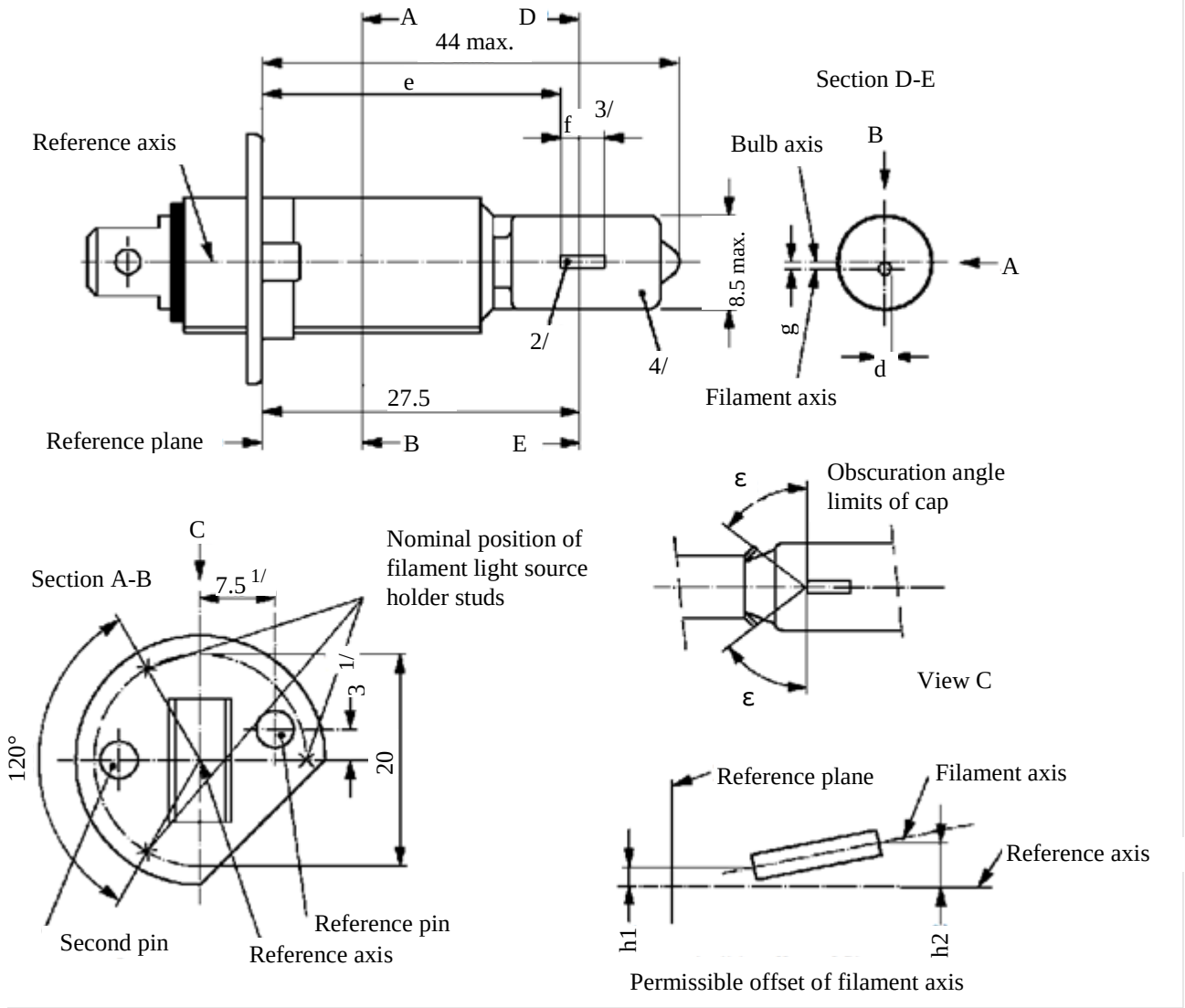

1/ The reference axis is perpendicular to the reference plane and passes through the point defined by the dimensions marked with 1.

2/ Both current lead-in legs shall be positioned in the bulb, the longer leg above the filament (the filament light source being viewed as shown in the figure). The internal design should be then such that stray light images and reflections are reduced to the minimum, e.g. by fitting cooling jackets over the non-coiled parts of the filament.

3/ The cylindrical portion of the bulb over length "f" shall be such as not to deform the projected image of the filament to such an extent as appreciably to affect the optical results.

4/ The colour of the light emitted shall be white or selective-yellow.

Category H1 **Sheet H1/2**

Dimensions in mm		*Filament light sources of normal production*			*Standard filament light source*
		6 V	*12 V*	*24 V*	*12 V*
e [6/,10/]		25.0 [9/]			25.0 ± 0.15
f [6/,10/]		4.5 ± 1.0	5.0 ± 0.5	5.5 ± 1.0	5.0 + 0.50 / -0.00
g [7/,8/]		0.5 d ± 0.5 d			0.5 d ± 0.25 d
h1		[9/]			0 ± 0.20 [5/]
h2		[9/]			0 ± 0.25 [5/]
ε		45° ± 12°			45° ± 3°
Cap P14.5s in accordance with IEC Publication 60061 (sheet 7004-46-2)					
Electrical and photometric characteristics					
Rated values	Volts	6	12	24	12
	Watts	55		70	55
Test Voltage	Volts	6.3	13.2	28.0	13.2
Objective values	Watts	63 max.	68 max.	84 max.	68 max.
	Luminous flux	1,350	1,550	1,900	
	± %	15			
Reference luminous flux at approximately			12 V		1,150
			13.2 V		1,550

5/ The eccentricity is measured only in the horizontal and vertical directions of the filament light source as shown in the figure. The points to be measured are those where the projections of the outside of the end turns nearest to or furthest from the reference plane crosses the filament axis.

6/ The viewing direction is the perpendicular to the reference axis contained in the plane defined by the reference axis and the centre of the second pin of the cap.

7/ Offset of filament in relation to bulb axis measured at 27.5 mm from the reference plane.

8/ d: diameter of filament.

9/ To be checked by means of a "Box system", sheet H1/3.

10/ The ends of the filament are defined as the points where, when the viewing direction is as defined in footnote 6/ above, the projection of the outside of the end turns nearest to or furthest from the reference plane crosses the reference axis (special instructions for coiled-coil filaments are under consideration).

Screen projection requirements

This test is used to determine, by checking whether the filament is correctly positioned relative to the reference axis and reference plane, whether a filament light source complies with the requirements.

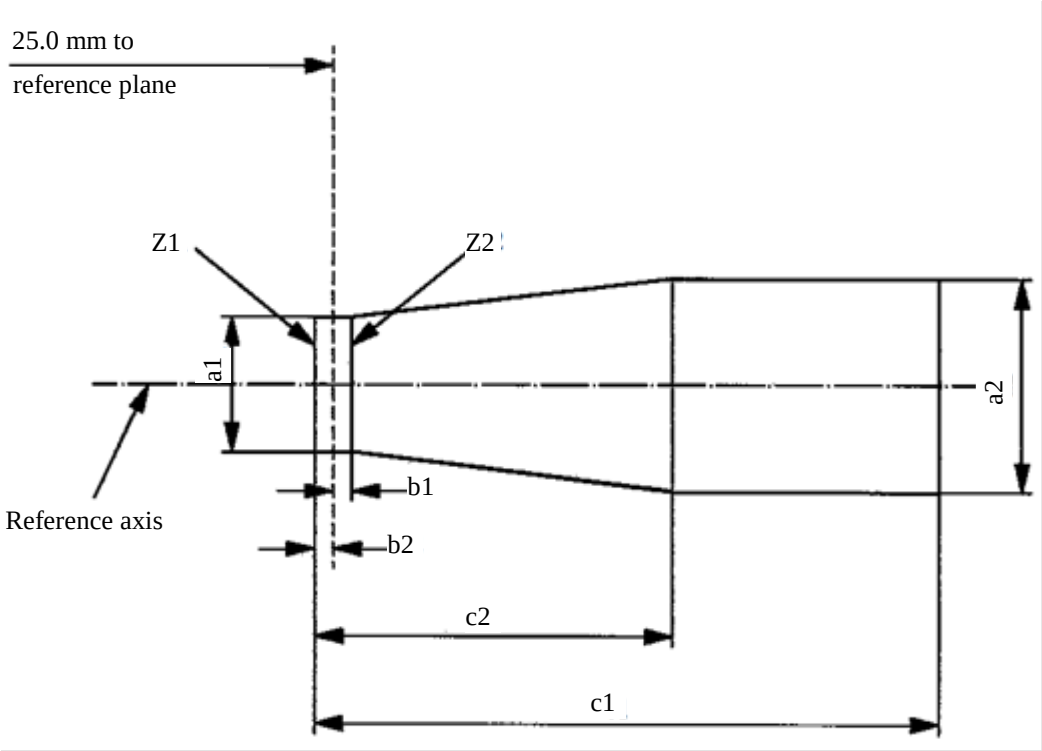

	a1	*a2*	*b1*	*b2*	*c1*	*c2*
6 V	1.4d	1.9 d	0.25		6	3.5
12 V					6	4.5
24 V					7	4.5

d = diameter of filament.

The filament position is checked solely in directions A and B as shown on sheet H1/1.

The filament shall lie entirely within the limits shown.

The beginning of the filament as defined on sheet H1/2, footnote 10/, shall lie between lines Z1 and Z2.

Category H3 **Sheet H3/1**

The drawings are intended only to illustrate the essential dimensions (in mm) of the filament light source

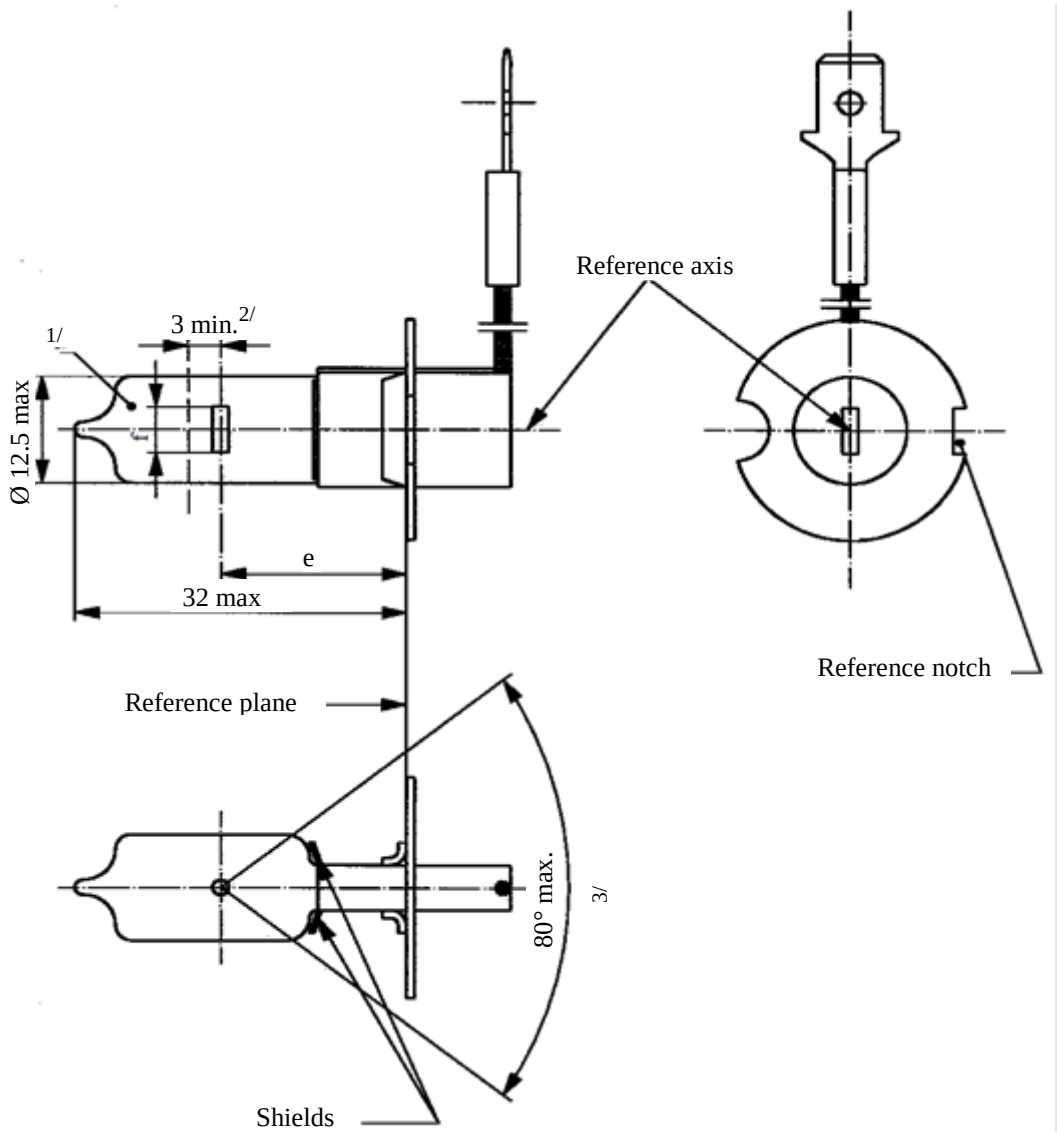

1/ The colour of the light emitted shall be white or selective-yellow.

2/ Minimum length above the height of the light emitting centre ("e") over which the bulb shall be cylindrical.

3/ The distortion of the base-end portion of the bulb shall not be visible from any direction outside the obscuration angle of 80° max. The shields shall produce no inconvenient reflections. The angle between the reference axis and the plane of each shield, measured on the bulb side, shall not exceed 90°.

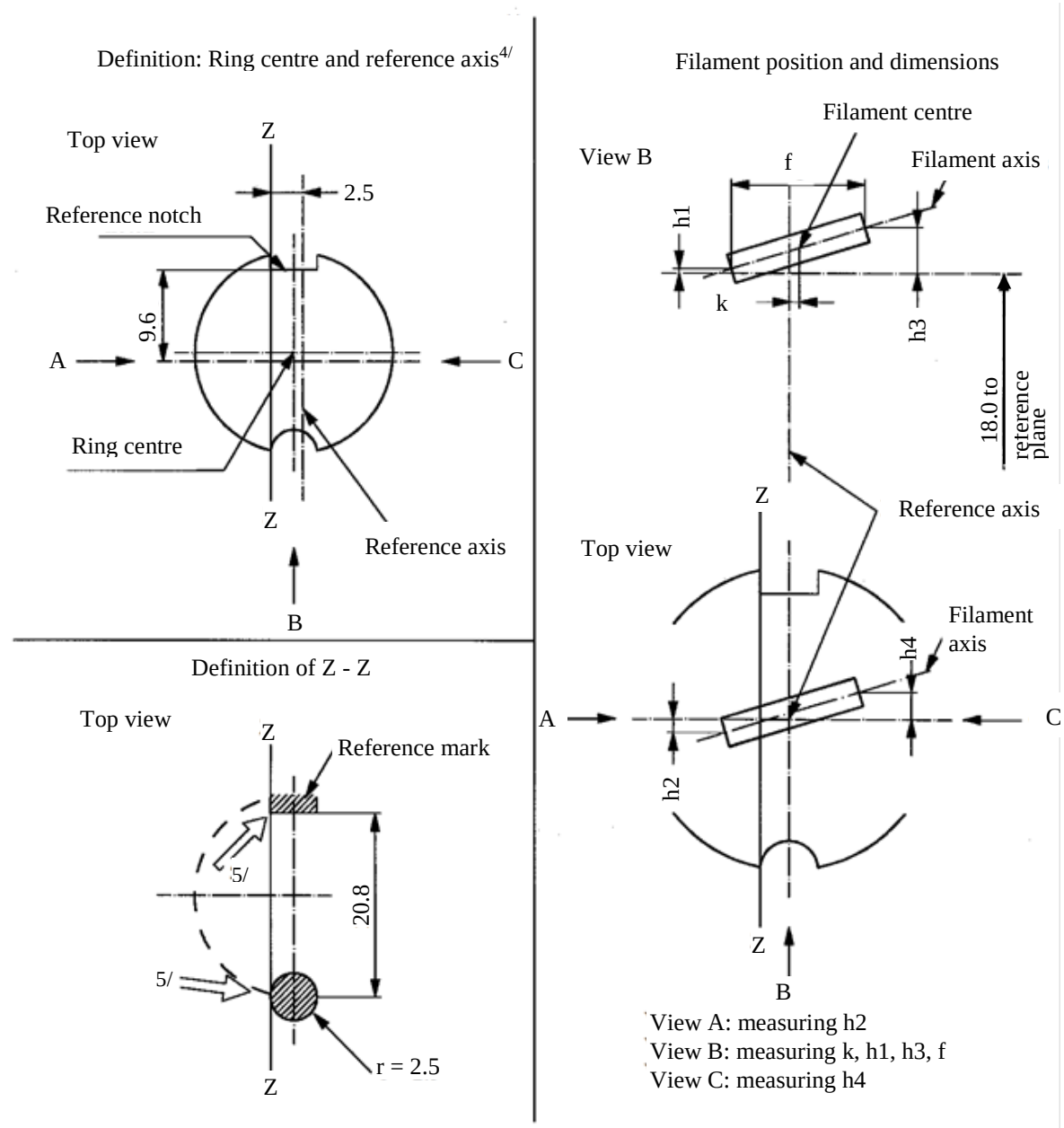

4/ The permissible deviation of the ring centre from the reference axis is 0.5 mm in the direction perpendicular to the Z-Z line and 0.05 mm in the direction parallel to the Z-Z line.

5/ The cap shall be pressed in these directions.

Category H3 **Sheet H3/3**

Dimensions in mm		*Filament light sources of normal production*			*Standard filament light source*
		6 V	*12 V*	*24 V*	*12 V*
e		18.0 [6/]			18.0
f [8/]		3.0 min.	4.0 min.		5.0 ± 0.50
k		0 [6/]			0 ± 0.20
h1, h3		0 [6/]			0 ± 0.15 [7/]
h2, h4		0 [6/]			0 ± 0.25 [7/]
Cap PK22s in accordance with IEC Publication 60061 (sheet 7004-47-4)					
Electrical and photometric characteristics					
Rated values	Volts	6	12	24	12
	Watts	55		70	55
Test voltage	Volts	6.3	13.2	28.0	13.2
Objective values	Watts	63 max.	68 max.	84 max.	68 max.
	Luminous flux	1,050	1,450	1,750	
	± %	15			
Reference luminous flux at approximately				12 V	1,100
				13.2 V	1,450

[6/] To be checked by means of a "Box system"; sheet H3/4.

[7/] For standard filament light sources the points to be measured are those where the projection of the outside of the end turns crosses the filament axis.

[8/] The positions of the first and the last turn of the filament are defined by the intersections of the outside of the first and of the last light emitting turn, respectively, with the plane parallel to and 18 mm distant from the reference plane. (Additional instructions for coiled-coil filament are under consideration).

Screen projection requirements

This test is used to determine, by checking whether the filament is correctly positioned relative to the reference axis and reference plane, whether a filament complies with the requirements.

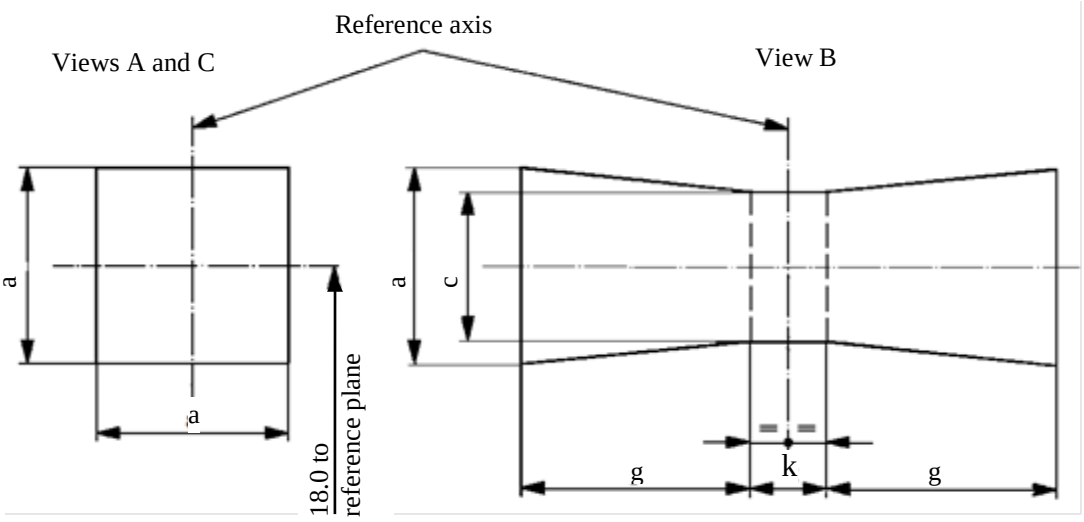

	a	*c*	*k*	*g*
6 V	1.8 d	1.6 d	1.0	2.0
12 V				2.8
24 V				2.9

d = diameter of filament

The filament shall lie entirely within the limits shown.

The centre of the filament shall lie within the limits of dimension k.

Category H4 **Sheet H4/1**

The drawings are intended only to illustrate the essential dimensions (in mm) of the filament light source

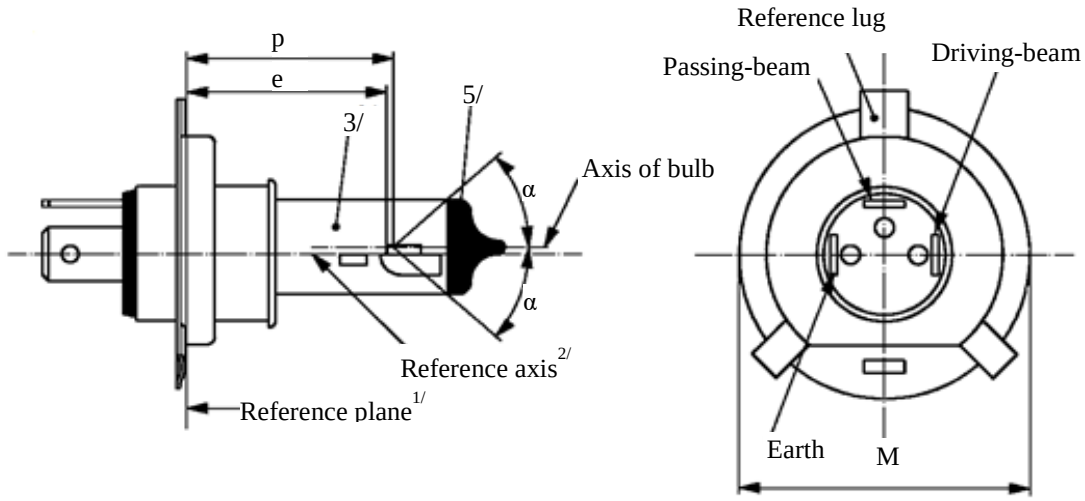

Figure 1 – Main drawing

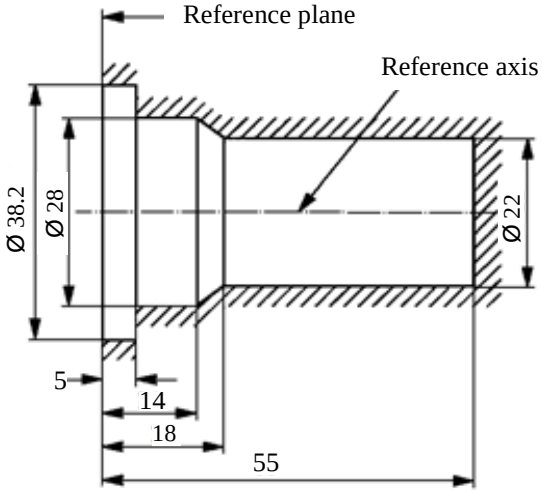

Figure 2

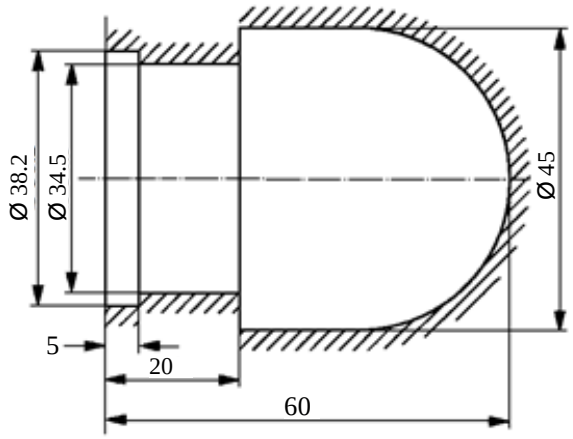

Figure 3

Maximum filament light source

1/ The reference plane is the plane formed by the seating points of the three lugs of the cap ring.

2/ The reference axis is perpendicular to the reference plane and passes through the centre of the circle of diameter "M".

3/ The colour of the light emitted shall be white or selective-yellow.

4/ The bulb and supports shall not exceed the envelope as in Figure 2. However, where a selective-yellow outer bulb is used the bulb and supports shall not exceed the envelope as in Figure 3.

5/ The obscuration shall extend at least as far as the cylindrical part of the bulb. It shall also overlap the internal shield when the latter is viewed in a direction perpendicular to the reference axis.

Dimensions in mm		*Filament light sources of normal production*				*Standard filament light source*	
		12 V		*24 V*		*12 V*	
e		28.5 +0.35/-0.25		29.0 ± 0.35		28.5 + 0.20 / -0.00	
p		28.95		29.25		28.95	
α		max. 40°				max. 40°	
Cap P43t in accordance with IEC Publication 60061 (sheet 7004-39-6)							
Electrical and photometric characteristics							
Rated values	Volts	12 [6/]		24 [6/]		12 [6/]	
	Watts	60	55	75	70	60	55
Test voltage	Volts	13.2		28.0		13.2	
Objective values	Watts	75 max.	68 max.	85 max.	80 max.	75 max.	68 max.
	Luminous flux	1,650	1,000	1,900	1,200		
	± %	15					
Measuring flux [7/] lm		-	750	-	800		
Reference luminous flux at approximately				12 V		1,250	750
				13.2 V		1,650	1,000

[6/] The value indicated in the left hand column relate to the driving-beam filament. Those indicated in the right-hand column relate to the passing-beam filament.

[7/] Measuring luminous flux according to the provisions for filament light sources with an internal shield to produce the cut-off.

Category H4 **Sheet H4/3**

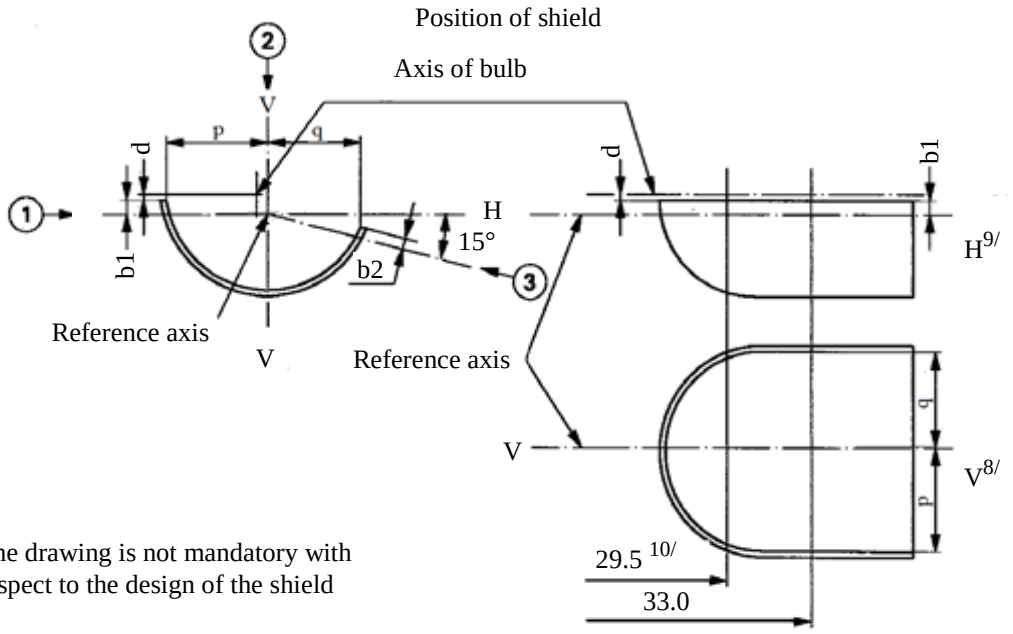

The drawing is not mandatory with respect to the design of the shield

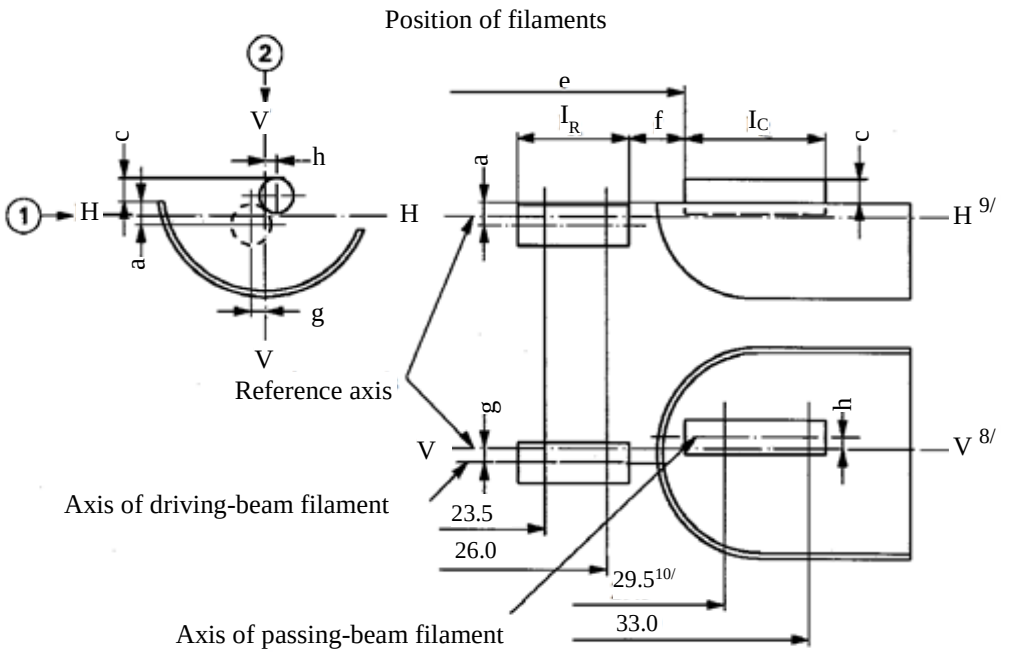

Table of the dimensions (in mm) referred to in the drawings on sheet H4/3

*Reference**		*Dimension***		*Tolerance*		
				Filament light sources of normal production		*Standard filament light source*
12 V	*24 V*	*12 V*	*24 V*	*12 V*	*24 V*	*12 V*
a/26		0.8		±0.35		±0.20
a/23.5		0.8		±0.60		±0.20
b1/29.5	30.0	0		±0.30	±0.35	±0.20
b1/33		b1/29.5 mv	b1/30.0 mv	±0.30	±0.35	±0.15
b2/29.5	30.0	0		±0.30	±0.35	±0.20
b2/33		b2/29.5 mv	b2/30.0 mv	±0.30	±0.35	±0.15
c/29.5	30.0	0.6	0.75	±0.35		±0.20
c/33		c/29.5 mv	c/30.0 mv	±0.35		±0.15
d		min. 0.1		-		-
e [13/]		28.5	29.0	+0.35 -0.25	±0.35	+0.20 -0.00
f [11/,12/,13/]		1.7	2.0	+0.50 -0.30	±0.40	+0.30 -0.10
g/26		0		±0.50		±0.30
g/23.5		0		±0.70		±0.30
h/29.5	30.0	0		±0.50		±0.30
h/33		h/29.5 mv	h/30.0 mv	±0.35		±0.20
I_R [11/,14/]		4.5	5.25	±0.80		±0.40
I_C [11/,14/]		5.5	5.25	±0.50	±0.80	±0.35
p/33		Depends on the shape of the shield		-		-
q/33		(p+q)/2		±0.60		±0.30

* "../26" means dimension to be measured at the distance from the reference plane indicated in mm after the stroke.
** "29.5 mv" or "30.0 mv" means the value measured at a distance of 29.5 or 30.0 mm from the reference plane.

8/ Plane V-V is the plane perpendicular to the reference plane and passing through the reference axis and through the intersection of the circle of diameter "M" with the axis of the reference lug.

9/ Plane H-H is the plane perpendicular to both the reference plane and plane V-V and passing through the reference axis.

10/ 30.0 mm for the 24-volt type.

11/ The end turns of the filament are defined as being the first luminous turn and the last luminous turn that are at substantially the correct helix angle. For coiled-coil filaments, the turns are defined by the envelope of the primary coil.

12/ For the passing-beam filament, the points to be measured are the intersections, seen in direction 1, of the lateral edge of the shield with the outside of the end turns defined under footnote 11/.

13/ "e" denotes the distance from the reference plane to the beginning of the passing-beam filament as defined above.

14/ For the driving-beam filament the points to be measured are the intersections, seen in direction 1, of a plane, parallel to plane H-H and situated at a distance of 0.8 mm below it, with the end turns defined under footnote 11/.

Additional explanations to sheet H4/3

The dimensions below are measured in three directions:

1 For dimensions a, b1, c, d, e, f, I_R and I_C;

2 For dimensions g, h, p and q;

3 For dimension b2.

Dimensions p and q are measured in planes parallel to and 33 mm away from the reference plane.

Dimensions b1, b2, c and h are measured in planes parallel to and 29.5 mm (30.0 mm for 24 V filament light sources) and 33 mm away from the reference plane.

Dimensions a and g are measured in planes parallel to and 26.0 mm and 23.5 mm away from the reference plane.

Note: For the method of measurement, see Appendix E of IEC Publication 60809.

The drawings are intended only to illustrate the essential dimensions (in mm) of the filament light source

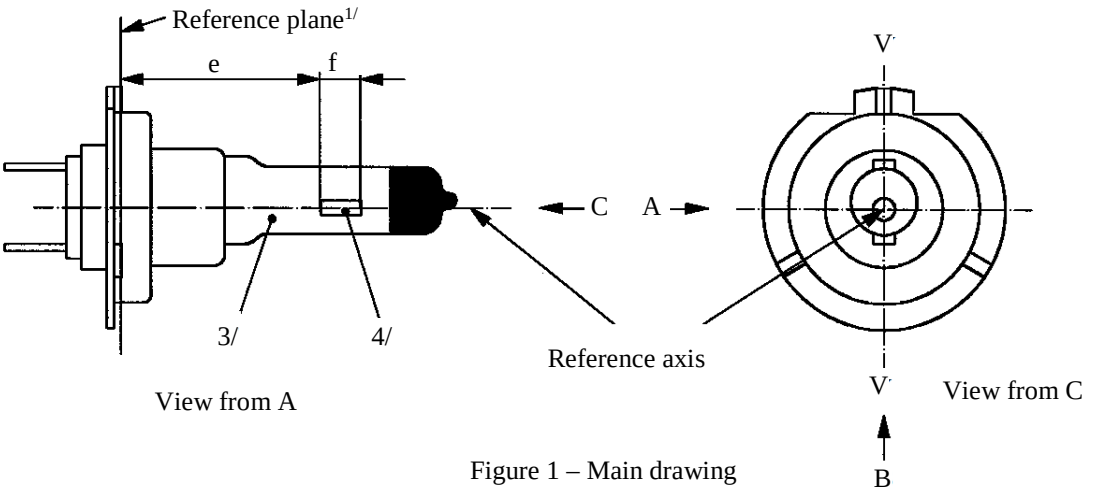

Figure 1 – Main drawing

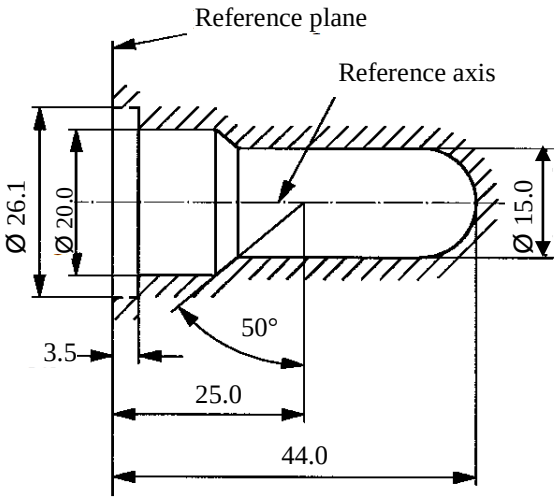

Figure 2 – Maximum filament light source outline5/

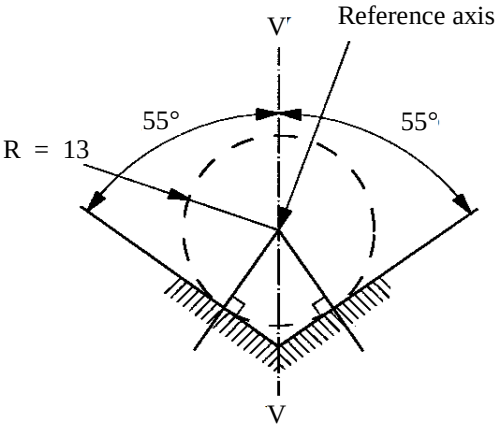

Figure 3 – Definition of reference axis2/

1/ The reference plane is defined by the points on the surfaces of the holder on which the three supporting bosses of the cap ring will rest.

2/ The reference axis is perpendicular to the reference plane and crosses the intersection of the two perpendiculars as indicated in Figure 3.

3/ The colour of the light emitted shall be white or selective-yellow.

4/ Notes concerning the filament diameter.

(a) No actual diameter restrictions apply but the objective for future developments is to have d max. = 1.3 mm for 12 V and d max. = 1.7 for 24 V filament light sources.

(b) For the same manufacturer, the design diameter of standard (étalon) filament light source and filament light source of normal production shall be the same.

5/ Glass bulb and supports shall not exceed the envelope as indicated in Figure 2. The envelope is concentric to the reference axis.

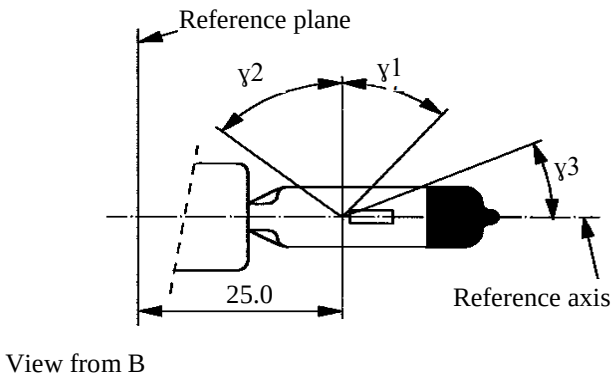

Figure 4 – Distortion free area and black top[6/,7/]

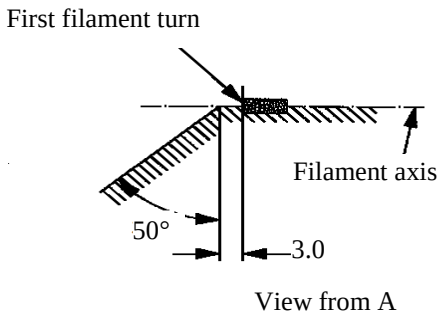

Figure 5 – Metal free zone[8/]

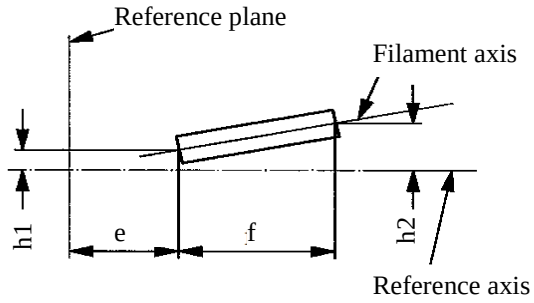

Figure 6 – Permissible offset of filament axis
(for standard filament light sources only)

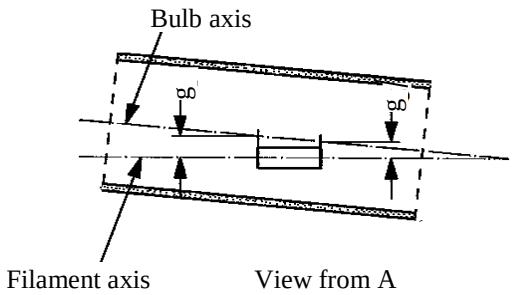

Figure 7 – Bulb eccentricity

6/ Glass bulb shall be optically distortion free within the angles γ1 and γ2. This requirement applies to the whole bulb circumference within the angles γ1 and γ2.

7/ The obscuration shall extend at least to the cylindrical part of the bulb on the whole bulb top circumference. It shall moreover extend at least to a plane parallel to the reference plane where γ3 crosses the outer bulb surface (view B as indicated on sheet H7/1).

8/ The internal design of the filament light source shall be such that stray light images and reflections are only located above the filament itself seen from the horizontal direction. (View A as indicated in Figure 1 on sheet H7/1).
No metal parts other than filament turns shall be located in the shaded area as seen in Figure 5.

Dimensions in mm		*Filament light sources of normal production*		*Standard filament light source*
		12 V	*24 V*	*12 V*
e [9/]		25.0 [10/]		25.0 ± 0.1
f [9/]		4.1 [10/]	4.9 [10/]	4.1 ± 0.1
g [12/]		0.5 min.		u.c.
h1 [11/]		0 [10/]		0 ± 0.10
h2 [11/]		0 [10/]		0 ± 0.15
γ1		40° min.		40° min.
γ2		50° min.		50° min.
γ3		30° min.		30° min.
Cap PX26d in accordance with IEC Publication 60061 (sheet 7004-5-7)				
Electrical and photometric characteristics				
Rated values	Volts	12	24	12
	Watts	55	70	55
Test voltage	Volts	13.2	28.0	13.2
Objectivevalues	Watts	58 max.	75 max.	58 max.
	Luminous flux	1,500 ± 10 %	1,750 ± 10 %	
Reference luminous flux at approximately			12 V	1,100
			13.2 V	1,500

9/ The ends of the filament are defined as the points where, when the viewing direction is direction A as shown in Figure 1 on sheet H7/1, the projection of the outside of the end turns crosses the filament axis. (Special instructions for coiled-coil filaments are under consideration).

10/ To be checked by means of a "Box system", sheet H7/4.

11/ The offset of the filament with respect to the reference axis is measured only in viewing directions A and B as shown in Figure 1 in sheet H7/1. The points to be measured are those where the projection of the outside of the end turns nearest to or furthest from the reference plane crosses the filament axis.

12/ Offset of filament in relation to bulb axis measured in two planes parallel to the reference plane where the projection of the outside of the end turns nearest to or furthest from the reference plane crosses the filament axis.

Screen projection requirements

This test is used to determine, by checking whether the filament is correctly positioned relative to the reference axis and reference plane, whether a filament light source complies with the requirements.

Dimensions in mm

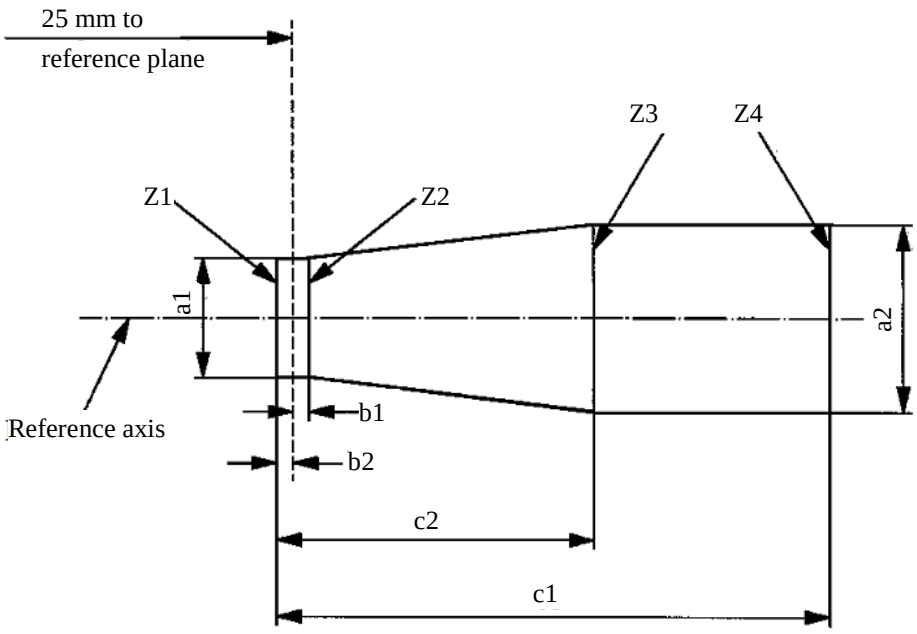

	a1	*a2*	*b1*	*b2*	*c1*	*c2*
12 V	d + 0.30	d + 0.50	0.2		4.6	4.0
24V	d + 0.60	d + 1.00	0.25		5.9	4.4

d = diameter of filament

The filament position is checked solely in directions A and B as shown on sheet H7/1, Figure 1.

The filament shall lie entirely within the limits shown.

The ends of the filament as defined on sheet H7/3, footnote 9/, shall lie between lines Z1 and Z2 and between Z3 and Z4.

The drawings are intended only to illustrate the essential dimensions (in mm) of the filament light source

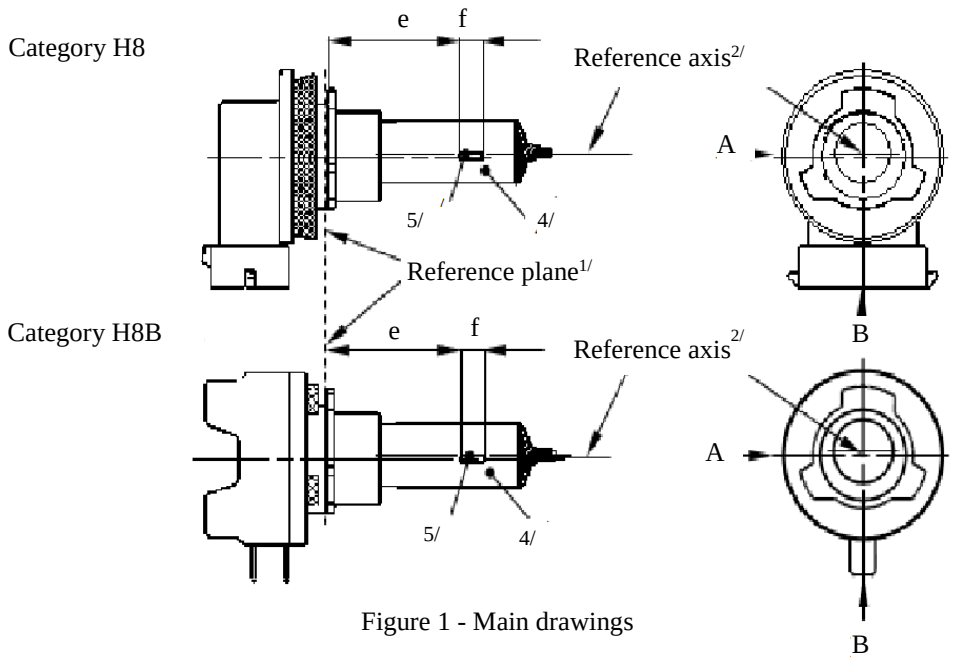

Figure 1 - Main drawings

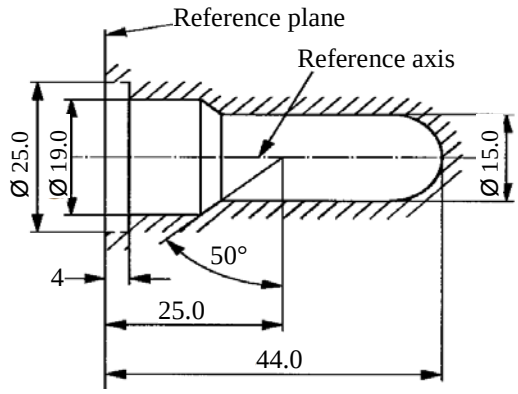

Figure 2 – Maximum filament light source outline[3/]

1/ The reference plane is the plane formed by the underside of the bevelled lead-in flange of the cap.

2/ The reference axis is perpendicular to the reference plane and passing through the centre of the 19 mm cap diameter.

3/ Glass bulb and supports shall not exceed the envelope as indicated in Figure 2. The envelope is concentric to the reference axis.

4/ The colour of the light emitted shall be white or selective-yellow.

5/ Notes concerning the filament diameter.

(a) No actual diameter restrictions apply but the objective for future developments is to have d max. = 1.2 mm.

(b) For the same manufacturer, the design diameter of standard (étalon) filament light source and filament light source of normal production shall be the same.

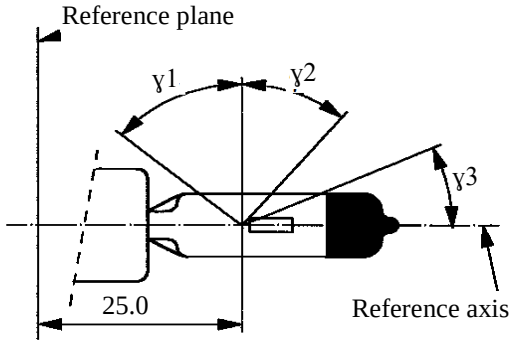

View B

Figure 3 – Distortion free area[6/] and black top[7/]

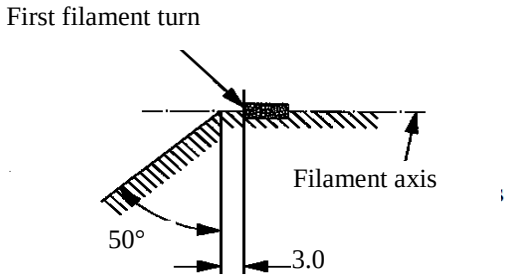

View A

Figure 4 – Metal free zone[8/]

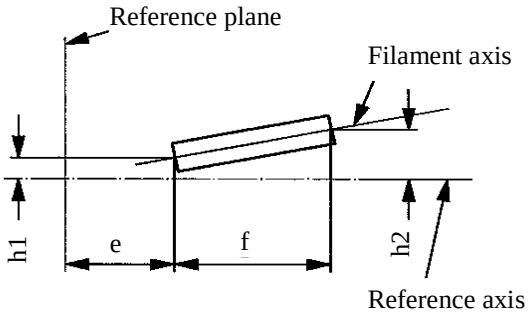

Figure 5 – Permissible offset of filament axis[9/]
(for standard filament light sources only)

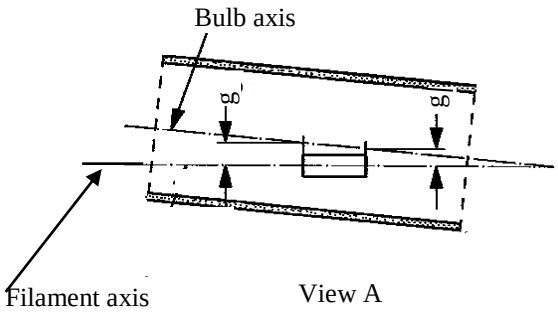

View A

Figure 6 – Bulb eccentricity[10/]

6/ Glass bulb shall be optically distortion free within the angles γ1 and γ2. This requirement applies to the whole bulb circumference within the angles γ1 and γ2.

7/ The obscuration shall extend at least to the cylindrical part of the bulb on the whole bulb top circumference. It shall moreover extend at least to a plane parallel to the reference plane where γ3 crosses the outer bulb surface (view B as indicated on sheet H8/1).

8/ The internal design of the filament light source shall be such that stray light images and reflections are only located above the filament itself seen from the horizontal direction. (View A as indicated in Figure 1 on sheet H8/1). No metal parts other than filament turns shall be located in the shaded area as seen in Figure 4.

9/ The offset of the filament with respect to the reference axis is measured only in viewing directions A and B as shown in Figure 1 in sheet H8/1. The points to be measured are those where the projection of the outside of the end turns nearest to or furthest from the reference plane crosses the filament axis.

10/ Offset of filament in relation to bulb axis measured in two planes parallel to the reference plane where the projection of the outside of the end turns nearest to or furthest from the reference plane crosses the filament axis.

Dimensions in mm		*Filament light sources of normal production* 12 V	*Standard filament light source* 12 V
e [11/]		25.0 [12/]	25.0 ± 0.1
f [11/]		3.7 [12/]	3.7 ± 0.1
g		0.5 min.	u.c.
h1		0 [12/]	0 ± 0.1
h2		0 [12/]	0 ± 0.15
γ1		50° min.	50° min.
γ2		40° min.	40° min.
γ3		30° min.	30° min.
Cap:	H8: PGJ19-1	in accordance with IEC Publication 60061 (sheet 7004-110-2)	
	H8B: PGJY19-1	in accordance with IEC Publication 60061 (sheet 7004-146-1)	
Electrical and photometric characteristics			
Rated values	Volts	12	12
	Watts	35	35
Test voltage	Volts	13.2	13.2
Objective values	Watts	43 max.	43 max.
	Luminous flux	800 ± 15 %	
Reference luminous flux at approximately		12 V	600
		13.2 V	800

[11/] The ends of the filament are defined as the points where, when the viewing direction is direction A as shown in Figure 1 on sheet H8/1, the projection of the outside of the end turns crosses the filament axis.

[12/] To be checked by means of a "Box system"; sheet H8/4.

Screen projection requirements

This test is used to determine, by checking whether the filament is correctly positioned relative to the reference axis and reference plane, whether a filament complies with the requirements.

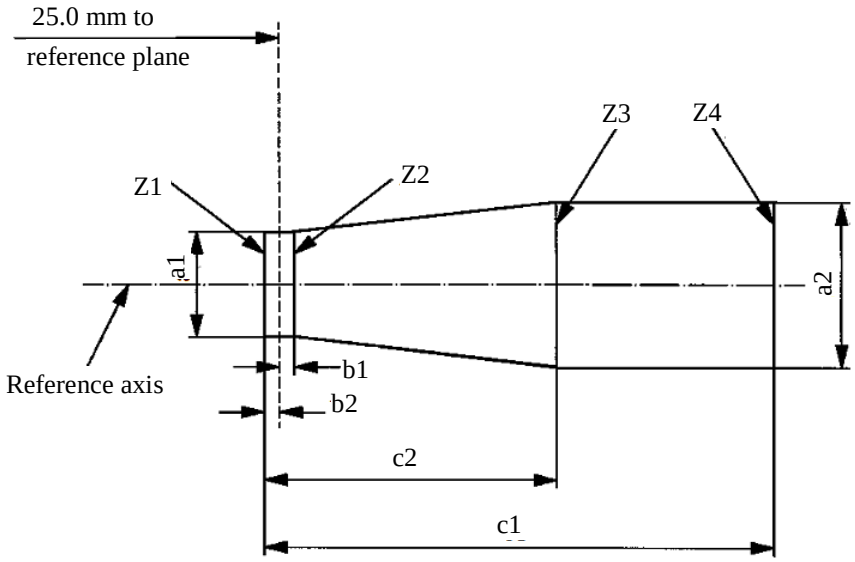

a1	*a2*	*b1*	*b2*	*c1*	*c2*
d + 0.50	d + 0.70	0.25		4.6	3.5

d = diameter of filament

The filament position is checked solely in directions A and B as shown on sheet H8/1, Figure 1.

The filament shall lie entirely within the limits shown.

The ends of the filament as defined on sheet H8/3, footnote 11/, shall lie between lines Z1 and Z2 and between Z3 and Z4.

The drawings are intended only to illustrate the essential dimensions (in mm) of the filament light source

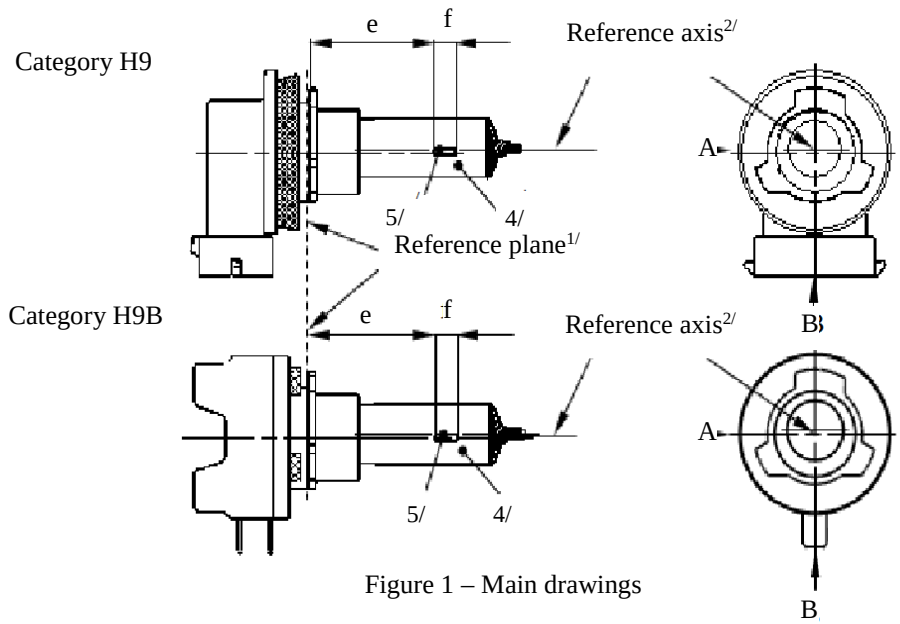

Figure 1 – Main drawings

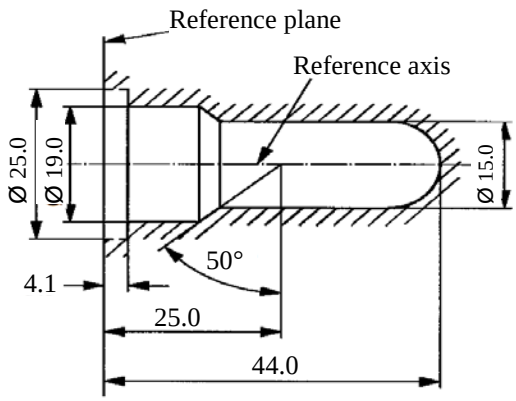

Figure 2 – Maximum filament light source outline3/

1/ The reference plane is the plane formed by the underside of the bevelled lead-in flange of the cap.

2/ The reference axis is perpendicular to the reference plane and passing through the centre of the 19 mm cap diameter.

3/ Glass bulb and supports shall not exceed the envelope as indicated in Figure 2. The envelope is concentric to the reference axis.

4/ Notes concerning the filament diameter:

(a) No actual diameter restrictions apply but the objective for future developments is to have d max. = 1.4 mm.

(b) For the same manufacturer, the design diameter of standard (étalon) filament light source and filament light source of normal production shall be the same.

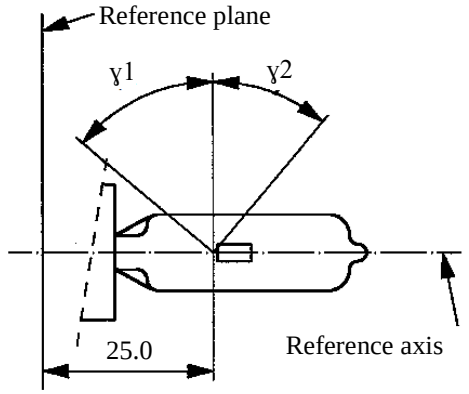

View B

Figure 3 – Distortion free area[5/]

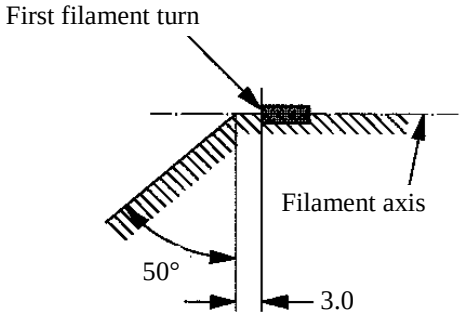

View A

Figure 4 – Metal free zone[6/]

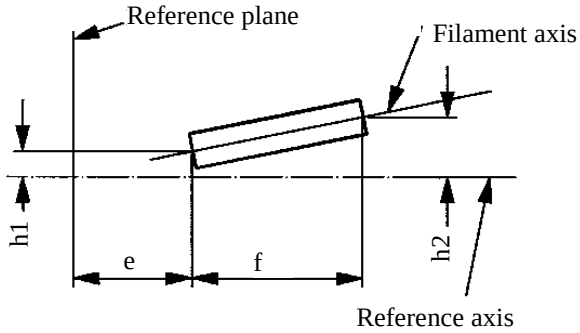

Figure 5 – Permissible offset of filament axis[7/]
(for standard filament light sources only)

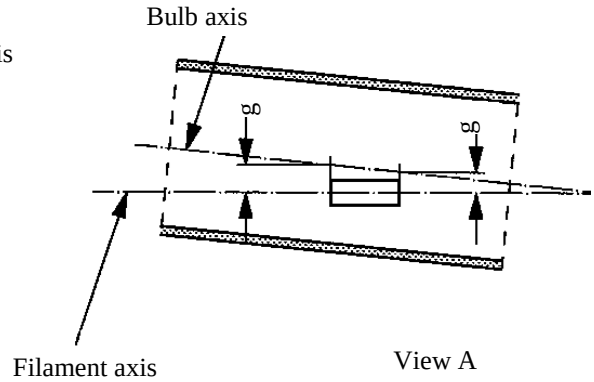

Figure 6 – Bulb eccentricity[8/]

5/ Glass bulb shall be optically distortion free within the angles γ1 and γ2. This requirement applies to the whole bulb circumference within the angles γ1 and γ2.

6/ The internal design of the filament light source shall be such that stray light images and reflections are only located above the filament itself seen from the horizontal direction. (View A as indicated in Figure 1, sheet H9/1). No metal parts other than filament turns shall be located in the shaded area as seen in Figure 4.

7/ The offset of the filament with respect to the reference axis is measured only in viewing directions A and B as shown in Figure 1 on sheet H9/1. The points to be measured are those where the projection of the outside of the end turns nearest to or furthest from the reference plane crosses the filament axis.

8/ Offset of filament in relation to bulb axis measured in two planes parallel to the reference plane where the projection of the outside of the end turns nearest to or furthest from the reference plane crosses the filament axis.

Dimensions in mm		*Tolerance*	
		Filament light sources of normal production	*Standard filament light source*
		12 V	*12 V*
e [9/,10/]	25	[11/]	±0.10
f [9/,10/]	4.8	[11/]	±0.10
g [9/]	0.7	±0.5	±0.30
h1	0	[11/]	±0.10 [12/]
h2	0	[11/]	±0.15 [12/]
γ1	50° min.	-	-
γ2	40° min.	-	-
Cap:	H9: PGJ19-5	in accordance with IEC Publication 60061 (sheet 7004-110-2)	
	H9B: PGJY19-5	in accordance with IEC Publication 60061 (sheet 7004-146-1)	

Electrical and photometric characteristics					
Rated values	Volts	12		12	
	Watts	65		65	
Test voltage	Volts	13.2	12.2	13.2	12.2
Objective values	Watts	73 max.	65 max.	73 max.	65 max.
	Luminous flux	2,100 ± 10 %	1,650 ± 10 %		
Reference luminous flux at approximately		12 V		1,500	
		12.2 V		1,650	
		13.2 V		2,100	

[9/] The viewing direction is direction A as shown in Figure 1 on sheet H9/1.

[10/] The ends of the filament are defined as the points where, when the viewing direction is as defined in footnote 9/ above, the projection of the outside of the end turns crosses the filament axis.

[11/] To be checked by means of a "Box system"; sheet H9/4.

[12/] The eccentricity is measured only in viewing directions A and B as shown in Figure 1 on sheet H9/1. The points to be measured are those where the projection of the outside of the end turns nearest or furthest from the reference plane crosses the filament axis.

Screen projection requirements

This test is used to determine, by checking whether the filament is correctly positioned relative to the reference axis and reference plane, whether a filament complies with the requirements.

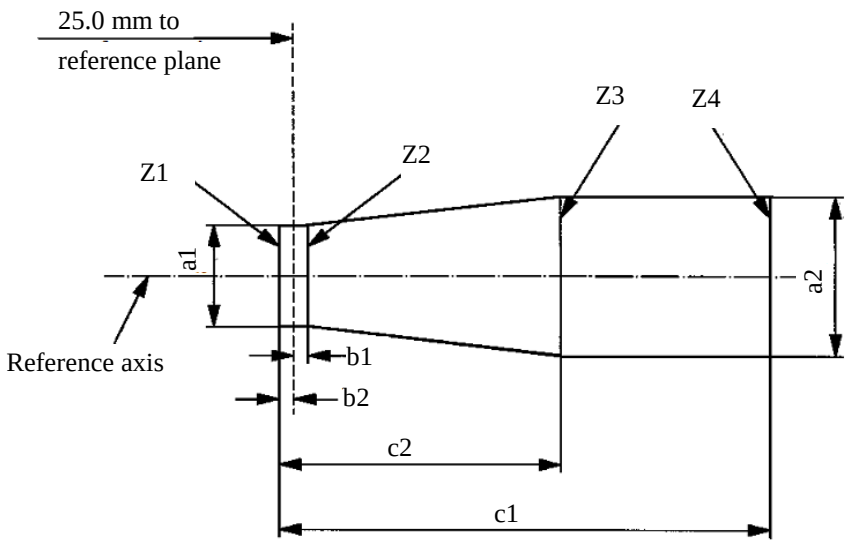

a1	*a2*	*b1*	*b2*	*c1*	*c2*
d + 0.4	d + 0.7	0.25		5.7	4.6

d = diameter of filament

The filament position is checked solely in directions A and B as shown on sheet H9/1, Figure 1.

The filament shall lie entirely within the limits shown.

The ends of the filament as defined on sheet H9/3, footnote 10/, shall lie between lines Z1 and Z2 and between Z3 and Z4.

The drawings are intended only to illustrate the essential dimensions (in mm) of the filament light source

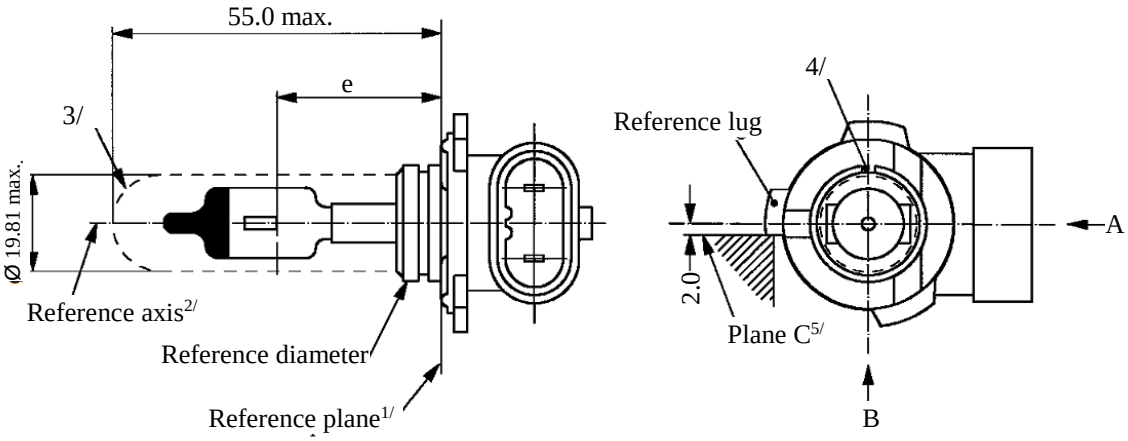

View A

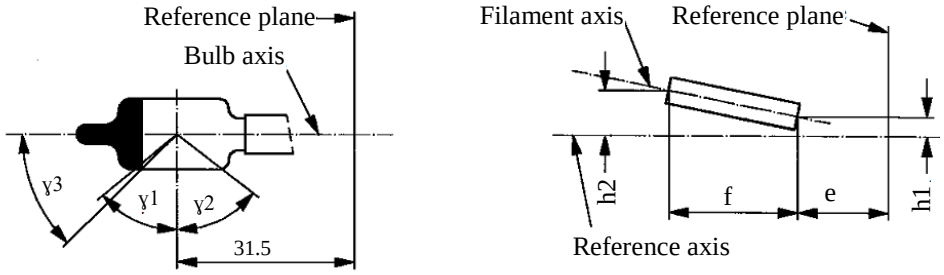

View A Distortion free area6/ and black top7/

Offset filament

1/ The reference plane is the plane defined by the meeting points of cap-holder fit.

2/ The reference axis is perpendicular to the reference plane and concentric with the reference diameter of the cap.

3/ Glass bulb and supports shall not exceed the envelope and shall not interfere with insertion past the filament light source key. The envelope is concentric to the reference axis.

4/ The keyway is mandatory.

5/ The filament light source shall be rotated in the measuring holder until the reference lug contacts plane C of the holder.

6/ Glass bulb periphery shall be optically distortion-free axially and cylindrically within the angles γ1 and γ2. This requirement applies to the whole bulb circumference within the angles γ1 and γ2 and does not need to be verified in the area covered by the obscuration.

7/ The obscuration shall extend to at least angle γ3 and shall be at least as far as the undistorted part of the bulb defined by angle γ1.

Category H10 **Sheet H10/2**

Dimensions in mm [8/]		*Tolerance*	
		Filament light sources of normal production	*Standard filament light source*
e [9/,10/]	28.9	[11/]	±0.16
f [9/,10/]	5.2	[11/]	±0.16
h1, h2	0	[11/]	±0.15 [12/]
γ1	50° min.	-	-
γ2	52° min.	-	-
γ3	45°	±5°	±5°
Cap PY20d in accordance with IEC Publication 60061 (sheet 7004-31-2)			
Electrical and photometric characteristics			
Rated values	Volts	12	12
	Watts	42	42
Test voltage	Volts	13.2	13.2
Objective values	Watts	50 max.	50 max.
	Luminous flux	850 ± 15 %	
Reference luminous flux at approximately		12 V	600
		13.2 V	850

[8/] Dimensions shall be checked with O-ring removed.

[9/] The viewing direction is direction* B as shown in the figure on sheet H10/1.

[10/] The ends of the filament are defined as the points where, when the viewing direction* as defined in footnote 9/ above, the projection of the outside of the end turns crosses the filament axis.

[11/] To be checked by means of a "Box system", sheet H10/3*.

[12/] The eccentricity is measured only in viewing directions* A and B as shown in the figure on sheet H10/1. The points to be measured are those where the projection of the outside of the end turns nearest to or furthest from the reference plane crosses the filament axis.

* Manufacturers may choose another set of perpendicular viewing directions. The viewing directions specified by the manufacturer are to be used by the testing laboratory when checking filament dimensions and position.

Screen projection requirements

This test is used to determine, by checking whether the filament is correctly positioned relative to the reference axis and reference plane, whether a filament light source complies with the requirements.

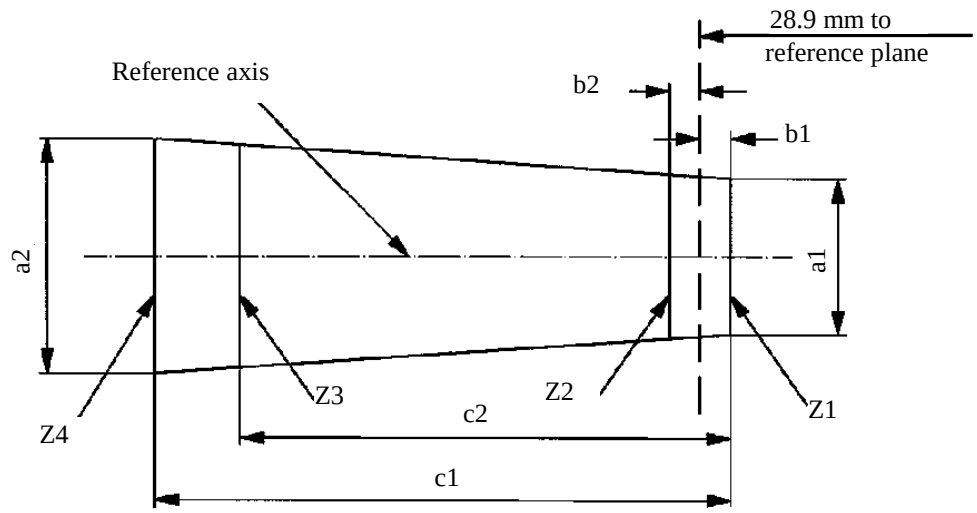

	a1	*a2*	*b1*	*b2*	*c1*	*c2*
12 V	1.4 d	1.8 d	0.25		6.1	4.9

d = diameter of filament

The filament position is checked solely in directions A and B as shown on sheet H10/1.

The filament shall lie entirely within the limits shown.

The ends of the filament as defined on sheet H10/2 footnote 10/ shall lie between lines Z1 and Z2 and between lines Z3 and Z4.

Categories H11 and H11B **Sheet H11/1**

The drawings are intended only to illustrate the essential dimensions (in mm) of the filament light source

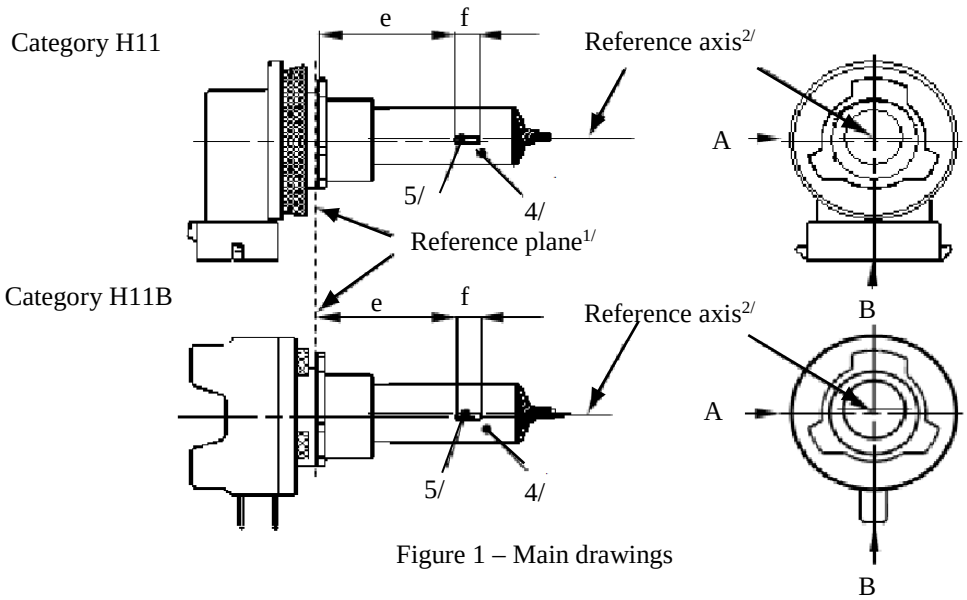

Figure 1 – Main drawings

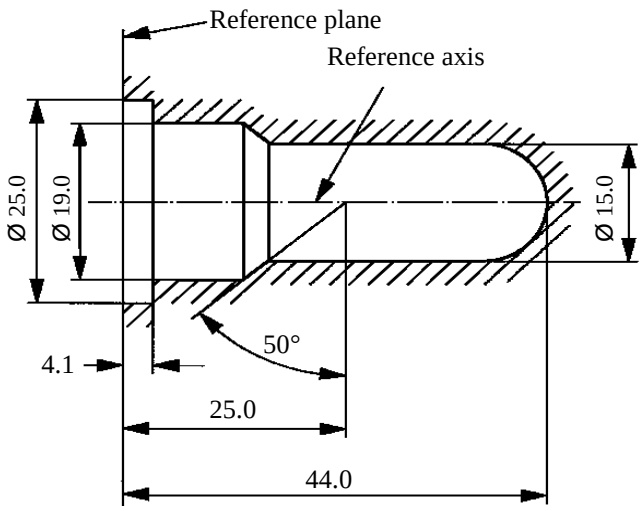

Figure 2 - Maximum filament light source outline[3/]

1/ The reference plane is the plane formed by the underside of the bevelled lead-in flange of the cap.

2/ The reference axis is perpendicular to the reference plane and passing through the centre of the 19 mm cap diameter.

3/ Glass bulb and supports shall not exceed the envelope as indicated in Figure 2. The envelope is concentric to the reference axis.

4/ The colour of the light emitted shall be white or selective-yellow.

5/ Notes concerning the filament diameter.

(a) No actual diameter restrictions apply but the objective for future developments is to have d max. = 1.4 mm.

(b) For the same manufacturer, the design diameter of standard (étalon) filament light source and filament light source of normal production shall be the same.

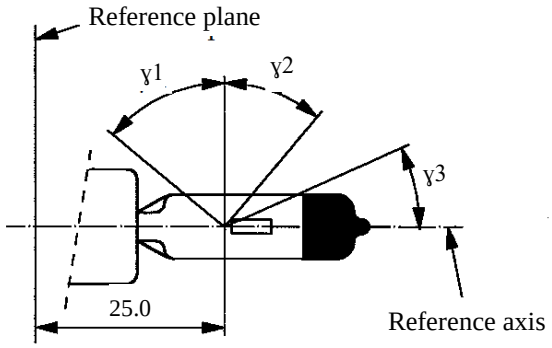

View B

Figure 3 - Distortion free area[6/] and black top[7/]

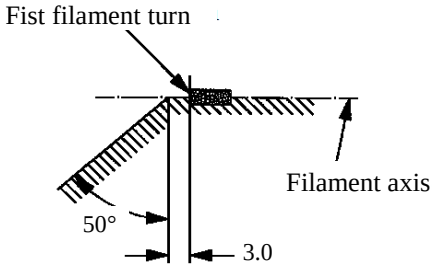

View A

Figure 4 – Metal free zone[8/]

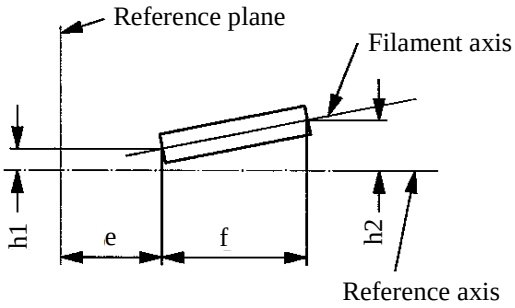

Figure 5 – Permissible offset of filament axis[9/]
(for standard filament light sources only)

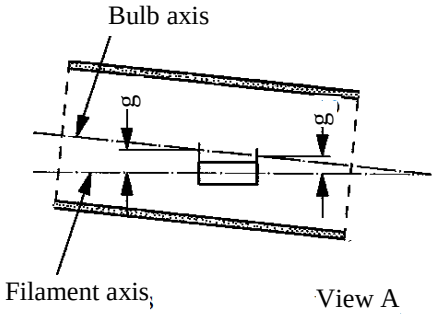

Figure 6 – Bulb eccentricity[10/]

6/ Glass bulb shall be optically distortion free within the angles γ1 and γ2. This requirement applies to the whole bulb circumference within the angles γ1 and γ2.

7/ The obscuration shall extend at least to the cylindrical part of the bulb on the whole bulb top circumference. It shall, moreover, extend at least to a plane parallel to the reference plane where γ3 crosses the outer bulb surface (view B as indicated on sheet H11/1).

8/ The internal design of the filament light source shall be such that stray light images and reflections are only located above the filament itself seen from the horizontal direction (view A as indicated in Figure 1 on sheet H11/1). No metal parts other than filament turns shall be located in the shaded area as seen in Figure 4.

9/ The offset of the filament with respect to the reference axis is measured only in viewing directions A and B as shown in Figure 1 on sheet H11/1. The points to be measured are those where the projection of the outside of the end turns nearest to or furthest from the reference plane crosses the filament axis.

10/ Eccentricity of bulb axis with respect to filament axis measured in two planes parallel to the reference plane where the projection of the outside of the end turns nearest to or furthest from the reference plane crosses the filament axis.

Categories H11 and H11B **Sheet H11/3**

Dimensions in mm		*Filament light sources of normal production*		*Standard filament light source*
		12 V	*24 V*	*12 V*
e [11/]		25.0 [12/]		25.0 ± 0.1
f [11/]		4.5	5.3 [12/]	4.5 ± 0.1
g		0.5 min.		u.c.
h1		0 [12/]		0 ± 0.1
h2		0 [12/]		0 ± 0.15
γ1		50° min.		50° min.
γ2		40° min.		40° min.
γ3		30° min.		30° min.
Cap:	H11: PGJ19-2	in accordance with IEC Publication 60061 (sheet 7004-110-2)		
	H11B: PGJY19-2	in accordance with IEC Publication 60061 (sheet 7004-146-1)		
Electrical and photometric characteristics				
Rated values	Volts	12	24	12
	Watts	55	70	55
Test voltage	Volts	13.2	28.0	13.2
Objective values	Watts	62 max.	80 max.	62 max.
	Luminous flux	1,350 ± 10 %	1,600 ± 10 %	
Reference luminous flux at approximately			12 V	1,000
			13.2 V	1,350

[11/] The ends of the filament are defined as the points where, when the viewing direction is View A as shown in Figure 1 on sheet H11/1, the projection of the outside of the end turns crosses the filament axis.

[12/] To be checked by means of a "Box system"; sheet H11/4.

Screen projection requirements

This test is used to determine, by checking whether the filament is correctly positioned relative to the reference axis and reference plane, whether a filament complies with the requirements.

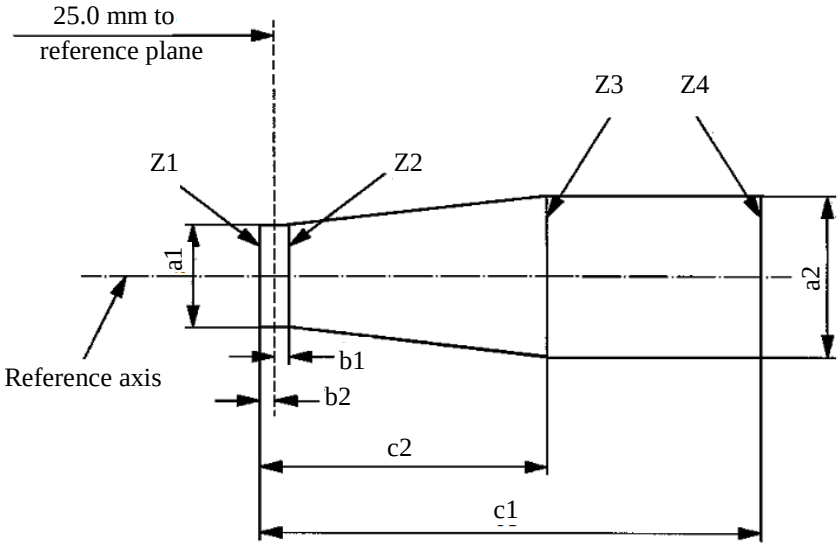

	a1	*a2*	*b1*	*b2*	*c1*	*c2*
12 V	d + 0.3	d + 0.5	0.2		5.0	4.0
24 V	d + 0.6	d + 1.0	0.25		6.3	4.6

d = diameter of filament

The filament position is checked solely in directions A and B as shown on sheet H11/1, Figure 1.

The filament shall lie entirely within the limits shown.

The ends of the filament as defined on sheet H11/3, footnote 11/, shall lie between lines Z1 and Z2 and between Z3 and Z4.

Category H12 **Sheet H12/1**

The drawings are intended only to illustrate the essential dimensions (in mm) of the filament light source

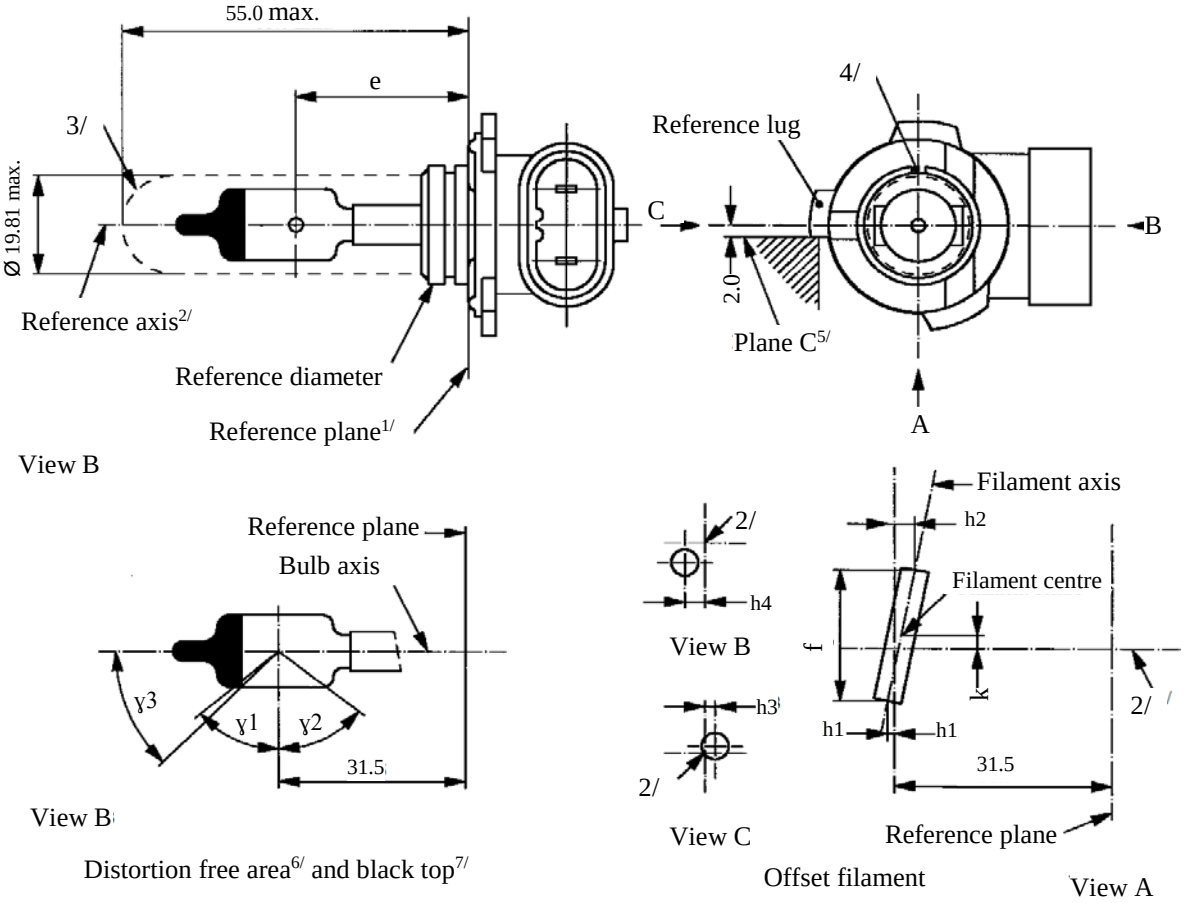

1/ The reference plane is the plane defined by the meeting points of cap-holder fit.

2/ The reference axis is perpendicular to the reference plane and concentric with the reference diameter of the cap.

3/ Glass bulb and supports shall not exceed the envelope and shall not interfere with insertion past the filament light source key. The envelope is concentric to the reference axis.

4/ The keyway is mandatory.

5/ The filament shall be rotated in the measuring holder until the reference lug contacts plane C of the holder.

6/ Glass bulb periphery shall be optically distortion-free axially and cylindrically within the angles γ1 and γ2. This requirement applies to the whole bulb circumference within the angles γ1 and γ2 and does not need to be verified in the area covered by the obscuration.

7/ The obscuration shall extend to at least angle γ3 and shall be at least as far as the undistorted part of the bulb defined by angle γ1.

Dimensions in mm [8/]		*Tolerance*	
		Filament light sources of normal production	*Standard filament light source*
e [9/,10/]	31.5	[11/]	±0.16
f [9/,10/]	5.5	4.8 min	±0.16
h1, h2, h3, h4	0	[11/]	±0.15 [12/]
k	0	[11/]	±0.15 [13/]
γ1	50° min.	-	-
γ2	52° min.	-	-
γ3	45°	±5°	±5°
Cap PZ20d in accordance with IEC Publication 60061 (sheet 7004-31-2)			
Electrical and photometric characteristics			
Rated values	Volts	12	12
	Watts	53	53
Test voltage	Volts	13.2	13.2
Objective values	Watts	61 max.	61 max.
	Luminous flux	1,050 ± 15 %	
Reference luminous flux at approximately		12 V	775
		13.2 V	1,050

8/ Dimensions shall be checked with O-ring removed.

9/ The viewing direction is direction A as shown in the figure on sheet H12/1.

10/ The ends of the filament are defined as the points where, when the viewing direction as defined in footnote 9/ above, the projection of the outside of the end turns crosses the filament axis.

11/ To be checked by means of a "Box system"; sheet H12/3.

12/ Dimensions h1 and h2 are measured in viewing direction A, dimension h3 in direction C and dimension h4 in direction B as shown in the figure on sheet H12/1. The points to be measured are those where the projection of the outside of the end turns nearest to or furthest from the reference plane crosses the filament axis.

13/ Dimension k is measured only in viewing direction A.

Screen projection requirements

This test is used to determine, by checking whether the filament is correctly positioned relative to the reference axis and reference plane, whether a filament light source complies with the requirements.

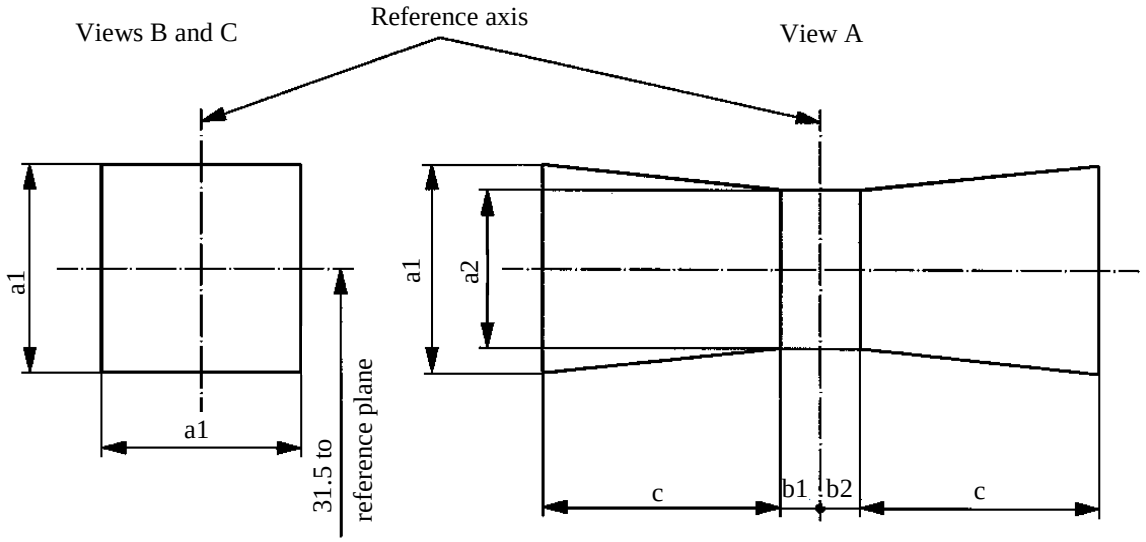

a1	*a2*	*b1*	*b2*	*c*
1.6 d	1.3 d	0.30	0.30	2.8

d = diameter of filament

For the directions of view A, B and C, see sheet H12/1.

The filament shall lie entirely within the limits shown.

The centre the filament shall lie between the limits of dimensions b1 and b2.

The drawings are intended only to illustrate the essential dimensions (in mm) of the filament light source.

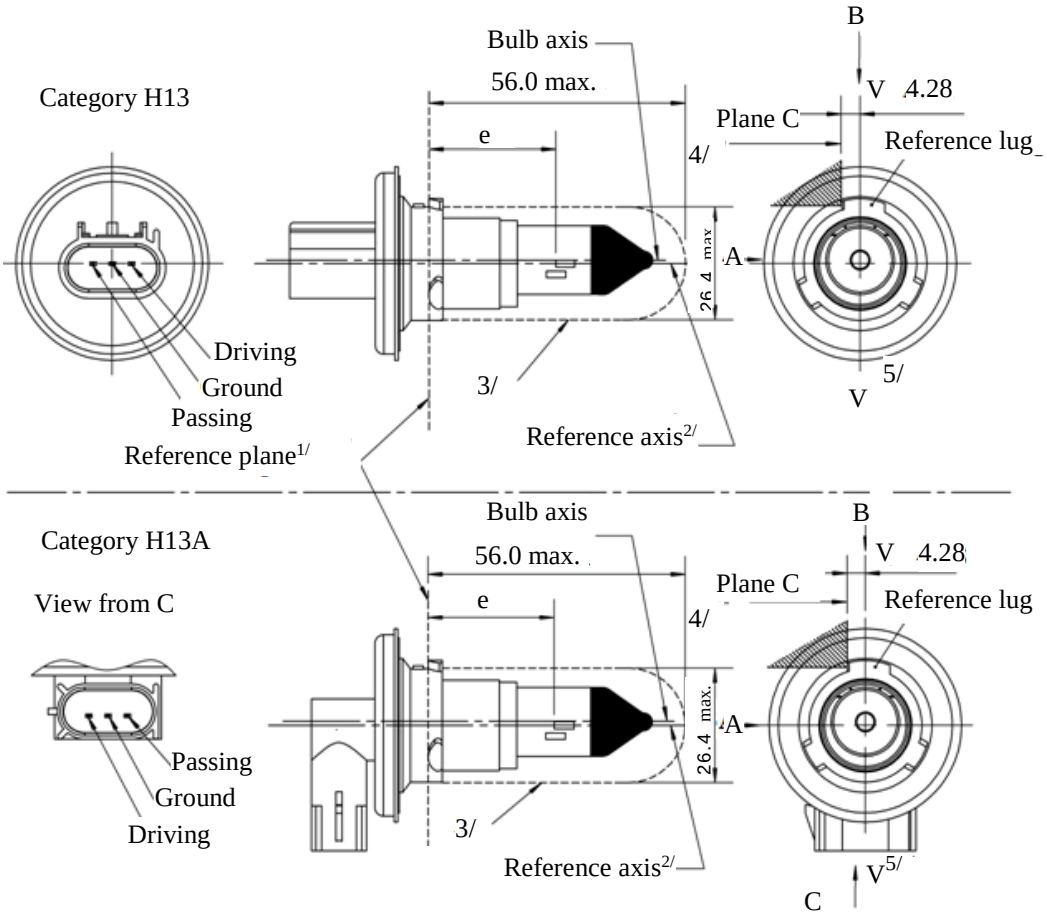

Figure 1 - Main drawing

1/ The reference plane is the plane formed by the underside of the three radiused tabs of the cap.

2/ The reference axis is perpendicular to the reference plane and crosses the intersection of the two perpendiculars as indicated in Figure 2 on sheet H13/2.

3/ Glass bulb and supports shall not exceed the envelope as indicated. The envelope is concentric to the reference axis.

4/ The filament light source shall be rotated in the measuring holder until the reference lug contacts plane C of the holder.

5/ Plane V-V is the plane perpendicular to the reference plane passing through the reference axis and parallel to plane C.

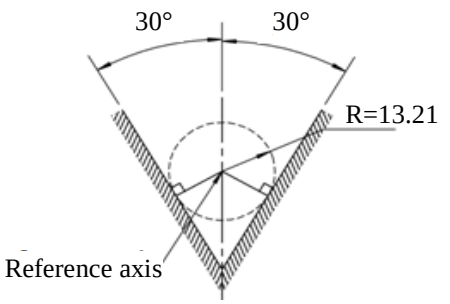

Figure 2 – Definition of reference axis[2/]

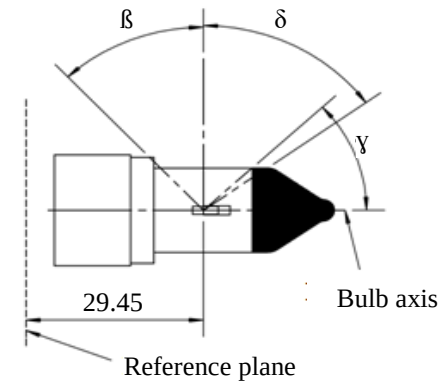

Figure 3 – Undistorted area[6/] and opaque coating[7/]

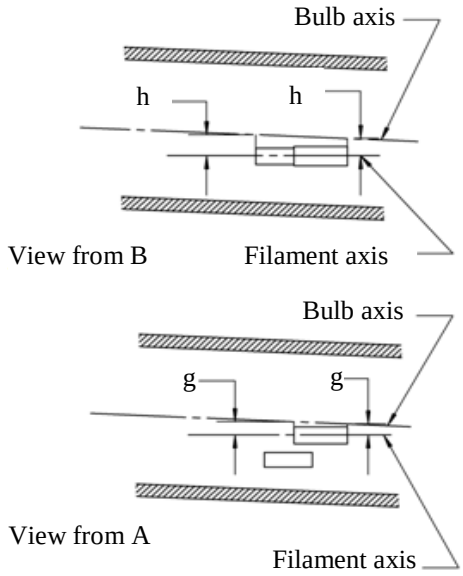

Figure 4 – Bulb offset[8/]

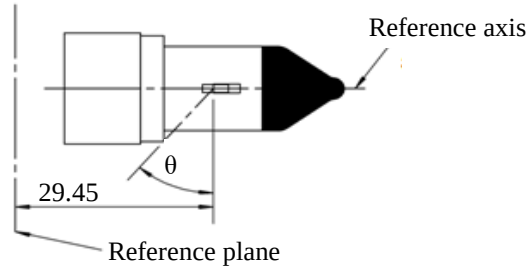

Figure 5 – Light blocking toward cap[9/]

6/ Glass bulb shall be optically distortion-free axially and cylindrically within the angles β and δ. This requirement applies to the whole bulb circumference within the angles β and δ and does not need to be verified in the area covered by the opaque coating.

7/ The opaque coating shall extend at least to the cylindrical part of the bulb on the whole bulb top circumference. It shall moreover extend at least to a plane parallel to the reference plane where γ crosses the outer bulb surface (view B as indicated on sheet H13/1).

8/ Offset of passing-beam filament in relation to the bulb axis is measured in two planes parallel to the reference plane where the projection of the outside end turns nearest to and farthest from the reference plane crosses the passing-beam filament axis.

9/ Light shall be blocked over the cap end of the bulb extending to angle θ. This requirement applies in all directions around the reference axis.

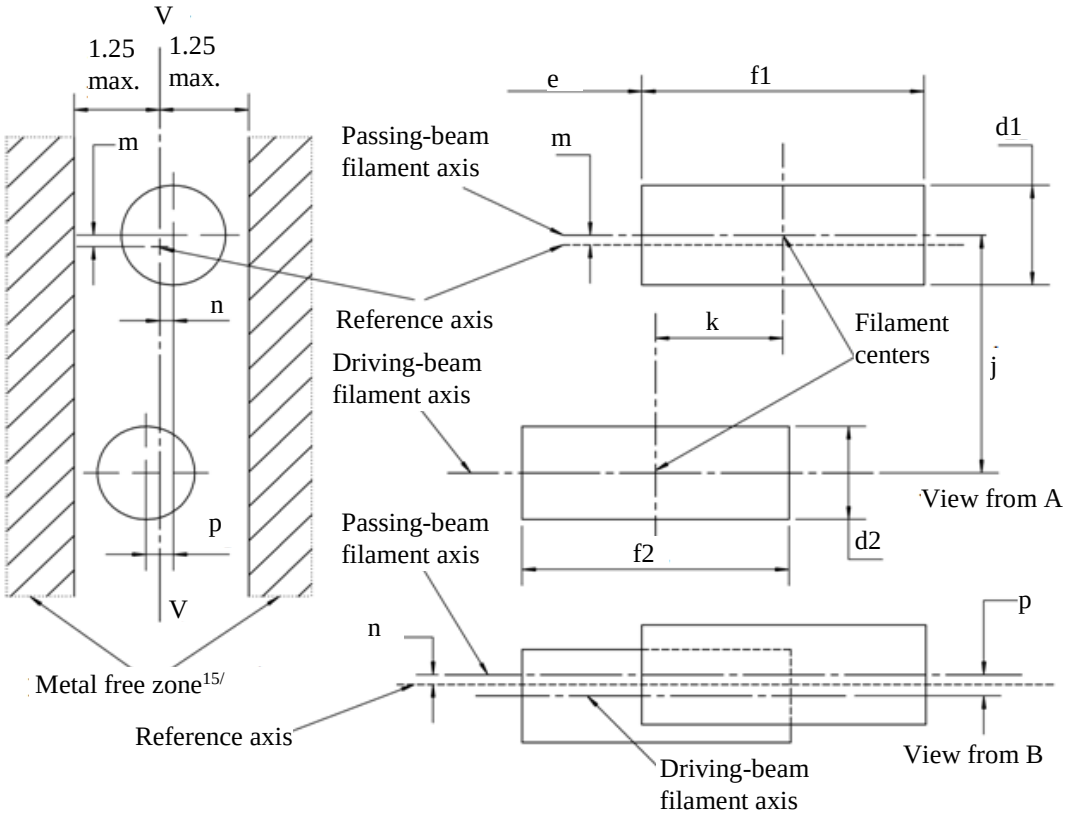

Figure 6 – Position and dimensions of filaments [10/, 11/, 12/, 13/, 14/]

10/ Dimensions j, k and p are measured from the centre of the passing-beam filament to the centre of the driving-beam filament.

11/ Dimensions m and n are measured from the reference axis to the centre of the passing-beam filament.

12/ Both filaments axis are to be held within a 2° tilt with respect to the reference axis about the centre of the respective filament.

13/ Note concerning the filament diameters.

(a) For the same manufacturer, the design filament diameter of standard (étalon) filament light source and filament light source of normal production shall be the same.

14/ For both the driving-beam and the passing-beam filament distortion shall not exceed ±5 per cent of filament diameter from a cylinder.

15/ The metal free zone limits the location of lead wires within the optical path. No metal parts shall be located in the shaded area as seen in Figure 6.

Categories H13 and H13A **Sheet H13/4**

Dimensions in mm		*Tolerance*			
		Filament light sources of normal production		*Standard filament light source*	
d1 [13/, 17/]	1.8 max.	-		-	
d2 [13/, 17/]	1.8 max.	-		-	
e [16/]	29.45	±0.20		±0.10	
f 1 [16/]	4.6	±0.50		±0.25	
f 2 [16/]	4.6	±0.50		±0.25	
g [8/, 17/]	0.5 d1	±0.40		±0.20	
h [8/]	0	±0.30		±0.15	
j [10/]	2.5	±0.20		±0.10	
k [10/]	2.0	±0.20		±0.10	
m [10/]	0	±0.20		±0.13	
n [10/]	0	±0.20		±0.13	
p [10/]	0	±0.08		±0.08	
β	42° min.	-		-	
δ	52° min.	-		-	
γ	43°	+0° / -5°		+0° / -5°	
θ [9/]	41°	±4°		±4°	
Cap: H13: P26.4t H13A: PJ26.4t	in accordance with IEC Publication 60061 (sheet 7004-128-3)				
Electrical and photometric characteristics [18/]					
Rated values	Volts	12		12	
	Watts	55	60	55	60
Test voltage	Volts	13.2		13.2	
Objective values	Watts	68 max.	75 max.	68 max.	75 max.
	Luminous flux	1,100 ± 15 %	1,700 ± 15 %		
Reference luminous flux at approximately		12 V		800	1,200
		13.2 V		1,100	1,700

[16/] The ends of the filament are defined as the points where, when the viewing direction is direction A as shown on sheet H13/1, the projection of the outside of the end turns crosses the filament axis.

[17/] d1 is the actual diameter of the passing-beam filament. d2 is the actual diameter of the driving-beam filament.

[18/] The values indicated in the left-hand columns relate to the passing-beam filament and those indicated in the right-hand columns to the driving-beam filament.

The drawings are intended only to illustrate the essential dimensions (in mm) of the filament light source.

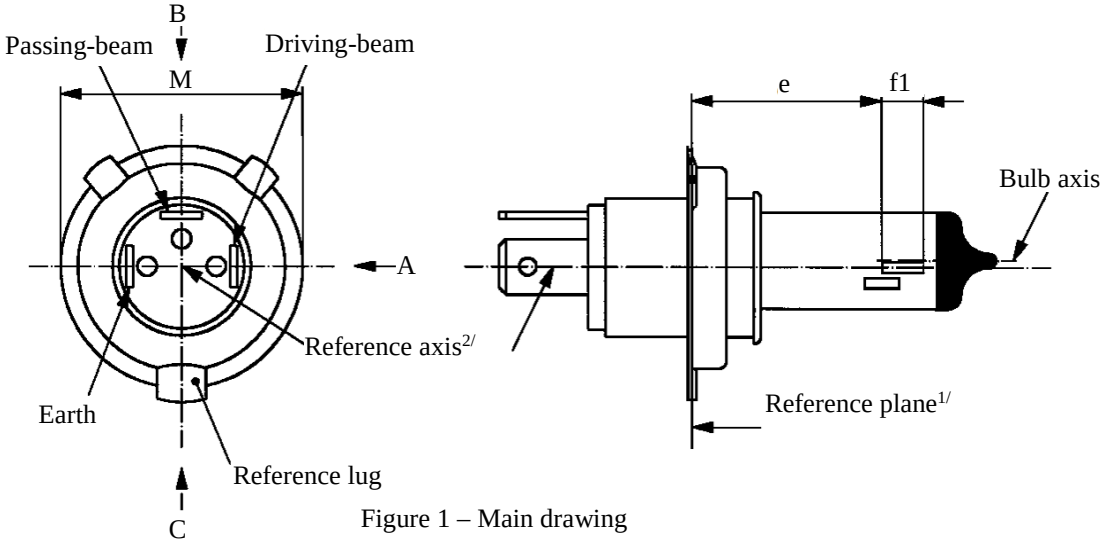

Figure 1 – Main drawing

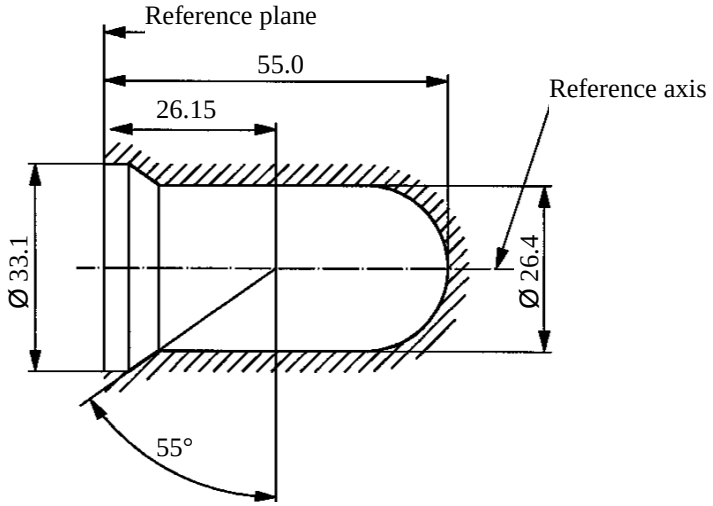

Figure 2 – Maximum filament light source outline3/

1/ The reference plane is defined by the points on the surface of the holder on which the three lugs of the cap ring will rest.

2/ The reference axis is perpendicular to the reference plane and passing through the centre of the cap ring diameter "M"

3/ Glass bulb and supports shall not exceed the envelope as indicated in Figure 2. The envelope is concentric to the reference axis.

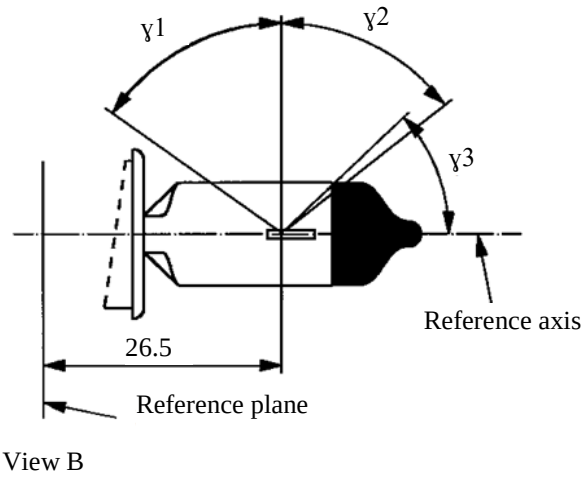

Figure 3 – Distorsion free area[4/] and black top[5/]

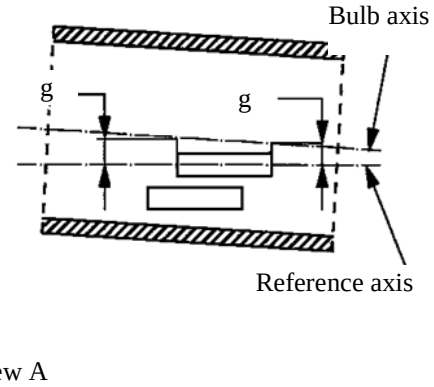

Figure 4 – Bulb eccentricity[6/]

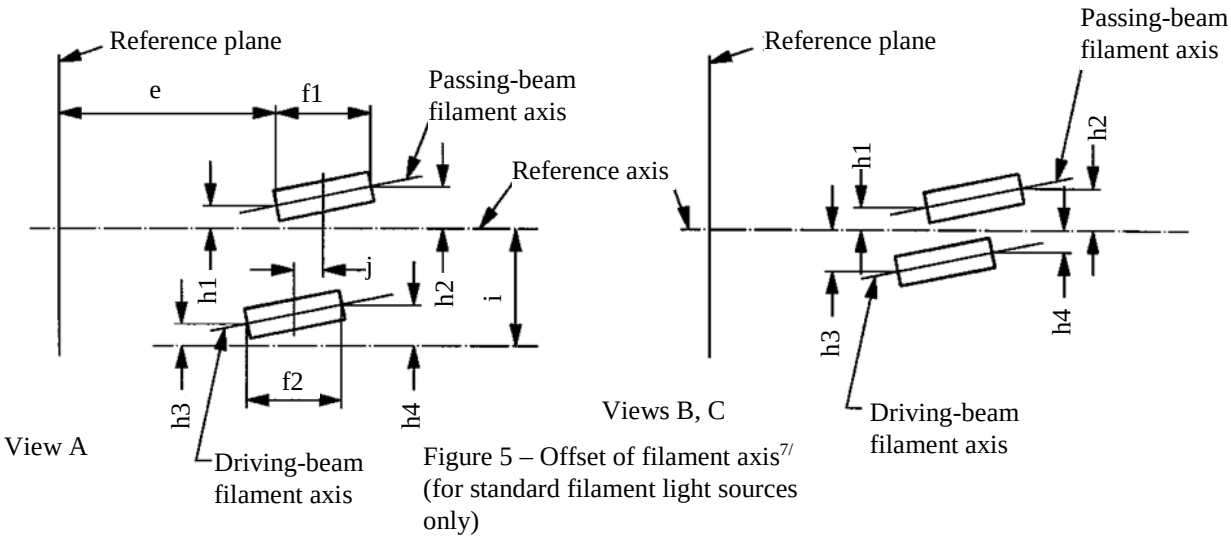

Figure 5 – Offset of filament axis[7/] (for standard filament light sources only)

[4/] Glass bulb shall be optically distortion free within the angles γ1 and γ2 . This requirement applies to the whole bulb circumference within the angles γ1 and γ2 and does not need to be verified in the area covered by the obscuration.

[5/] The obscuration shall extend at least to the cylindrical part of the bulb on the whole bulb top circumference. It shall, moreover, extend at least to a plane parallel to the reference plane where γ3 crosses the outer bulb surface (view B as indicated on sheet H14/1).

[6/] Eccentricity of bulb with respect to passing-beam filament axis is measured in two planes parallel to the reference plane where the projection of the outside of the end turns nearest to or furthest from the reference plane crosses the passing-beam filament axis.

[7/] The offset of the filaments with respect to the reference axis is measured only in viewing direction A, B and C as shown in Figure 1 on sheet H14/1. The points to be measured are those where the projection of the outside of the end turns nearest to or furthest from the reference plane crosses the filaments axis.

Dimensions in mm		*Filament light source of normal production*	*Standard filament light sources*
e [8/]	26.15	[10/]	±0.1
f1 [8/,9/]	5.3	[10/]	±0.1
f2 [8/,9/]	5.0	[10/]	±0.1
g	0.3 min.		
h1	0	[10/]	±0.1
h2	0	[10/]	±0.15
h3	0	[10/]	±0.15
h4	0	[10/]	±0.15
i	2.7		-
j	2.5	[10/]	±0.1
γ1	55° min.	-	-
γ2	52° min.	-	-
γ3	43°	0/-5°	0/-5°

Cap P38t in accordance with IEC Publication 60061 (sheet 7004-133-1)

Electrical and photometric characteristics

Rated values	Volts	12		12	
	Watts	55	60	55	60
Test voltage	Volts	13.2		13.2	
Objective values	Watts	68 max.	75 max.	68 max.	75 max.
	Luminous flux	1,150 ± 15 %	1,750 ± 15 %		
Reference luminous flux at approximately			12 V	860	1,300
			13.2 V	1,150	1,750

[8/] The ends of the filaments are defined as the points where, when the viewing direction is direction A as shown in Figure 1 on sheet H14/1, the projection of the outside of the end turns crosses the filaments axis.

[9/] "f1" represents the length of the passing-beam filament and "f2" represents the length of the driving-beam filament.

[10/] To be checked by means of a "Box system"; sheet H14/4.

Screen projection requirements

This test is used to determine, by checking whether the filaments are correctly positioned relative to the reference axis and the reference plane, whether a filament light source complies with the requirements.

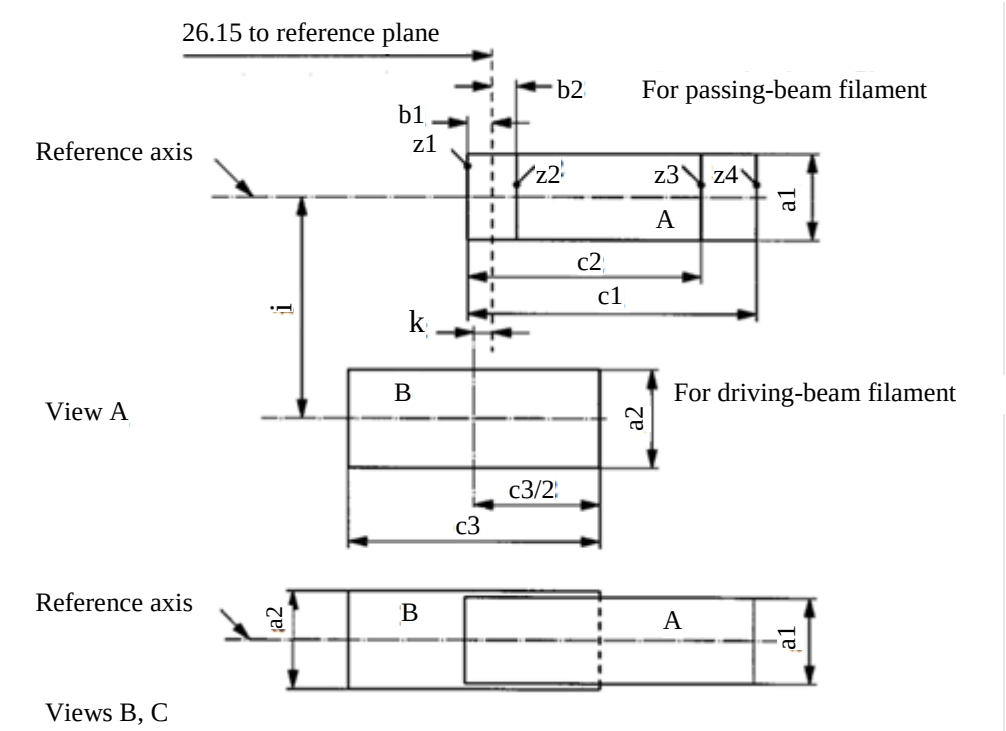

a1	*a2*	*b1*	*b2*	*c1*	*c2*	*c3*	*i*	*k*
d1 +0.5	1.6 * d2	0.2		5.8	5.1	5.75	2.7	0.15

d1 is diameter of the passing-beam filament and d2 that of the driving-beam filament.

Notes concerning the filaments diameter:

(a) No actual diameter restrictions apply but the objective for future developments is to have d1 max. = 1.6 mm and d2 max. = 1.6 mm.

(b) For the same manufacture, the design diameter of standard filament light sources and filament light sources of normal production shall be the same.

The positions of the filaments are checked solely in directions A, B and C as shown in Figure 1 on sheet H14/1.

The passing-beam filament shall lie entirely in the rectangle A and the driving-beam filament entirely in rectangle B.

The ends of the passing-beam filament as defined on sheet H14/3, footnote 8/ shall lie between lines Z1 and Z2 and between lines Z3 and Z4.

The drawings are intended only to illustrate the essential dimensions (in mm) of the filament light source

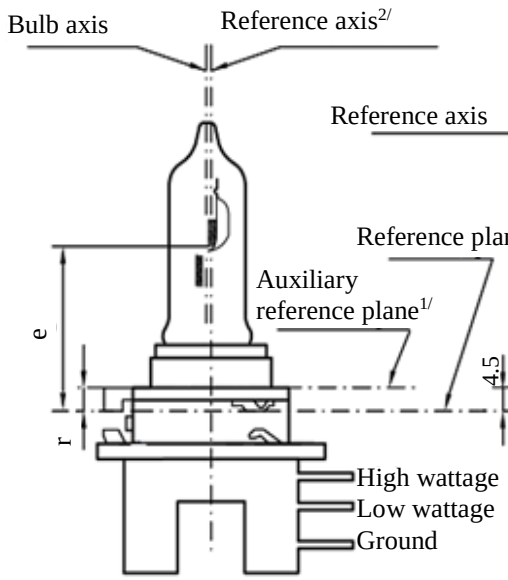

Figure 1 – Main drawing

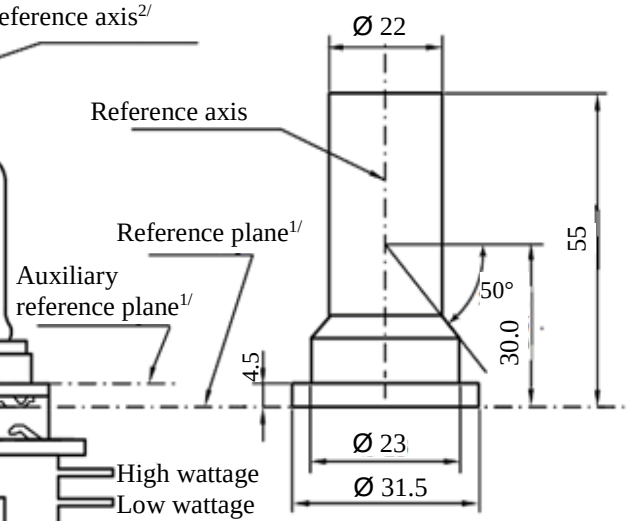

Figure 3 - Maximum filament light source outlines3/

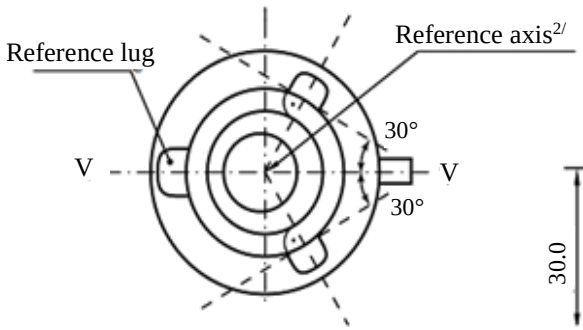

Figure 2 – Definition of reference axis7/

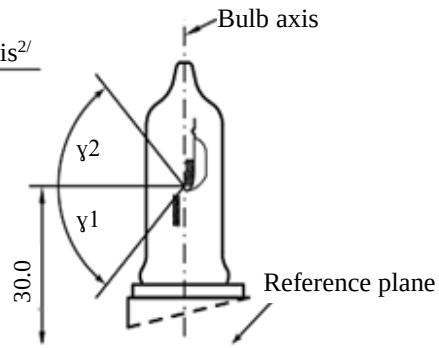

Figure 4 - Distortion free area4/

1/ The reference plane is defined by the points at which the holder touches the three lugs of the cap ring from the plug side. It is intended for use as an internal reference plane.
The auxiliary reference plane is defined by the points on the surface of the holder on which the three supporting bosses of the cap ring will rest. It is intended for use as an external reference plane.
The cap is designed for use of the (internal) reference plane, but for certain applications the (external) auxiliary reference plane may be used instead.

2/ The reference axis is perpendicular to the reference plane and crosses the intersection of the two perpendiculars as indicated in Figure 2 on sheet H15/1.

3/ Glass bulb and supports shall not exceed the envelope as indicated in Figure 3. The envelope is concentric to the reference axis.

4/ Glass bulb shall be optically distortion free within the angles γ_1 and γ_2 as indicated in Figure 4. This requirement applies to the whole bulb circumference within the angles γ_1 and γ_2.

Category H15 **Sheet H15/2**

Dimensions in mm		*Filament light sources of normal production*				*Standard filament light source*	
		12 V		*24 V*		*12 V*	
e		30.0 + 0.35 / -0.25		30.0 + 0.35 / -0.25		30.0 + 0.20 / -0.15	
γ_1		50°min		50°min		50°min	
γ_2		50°min		50°min		50°min	
r	For details see cap sheet						
Cap PGJ23t-1 in accordance with IEC Publication 60061 (sheet 7004-155-1)							
Electrical and photometric characteristics							
Rated values	Volts	12 [5/]		24 [5/]		12 [5/]	
	Watts	15	55	20	60	15	55
Test voltage	Volts	13.2		28.0		13.2	13.2
Objective values	Watts	19 max.	64 max.	24 max.	73 max.	19 max.	64 max.
	Luminous flux	260	1,350	300	1,500		
		±10 %					
Reference luminous flux at approximately 12 V							1,000
Reference luminous flux at approximately 13.2 V							1,350
Reference luminous flux at approximately 13.5 V						290	

[5/] The values indicated in the left-hand columns relate to the low wattage filament. Those indicated in the right-hand columns relate to the high wattage filament.

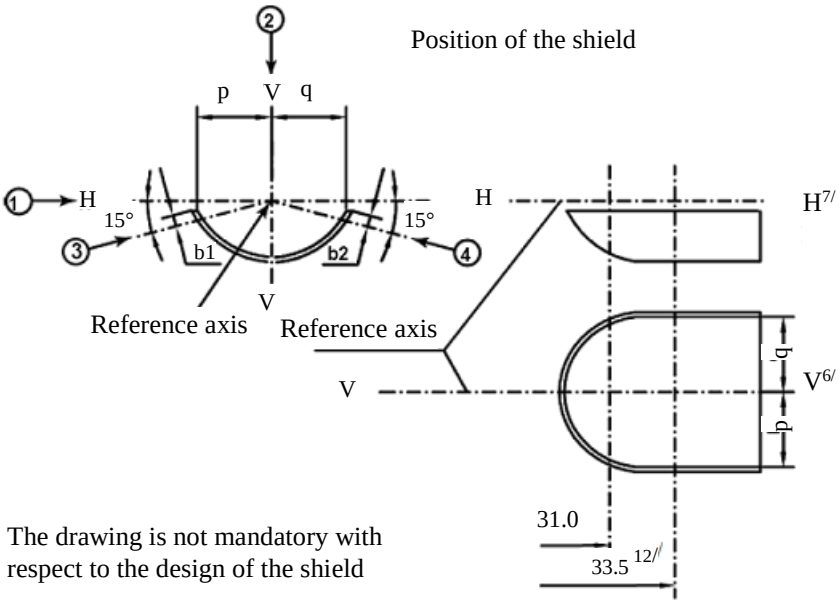
Position of the shield
p
V
q
H
15°
15°
b1
b2
V
Reference axis
Reference axis
H
H7/
V
V6/
q
p
31.0
33.5
12/
The drawing is not mandatory with
respect to the design of the shield

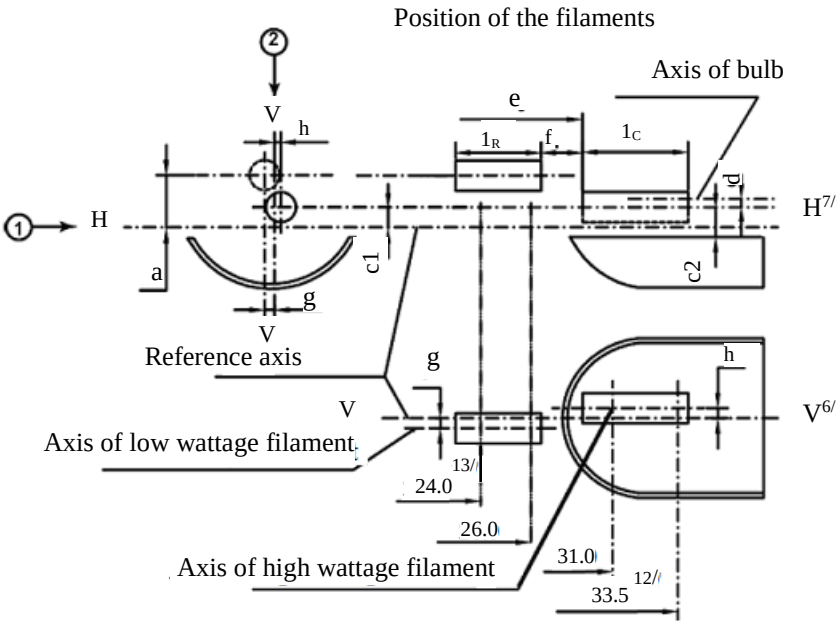
Position of the filaments
Axis of bulb
V
h
e
1R
f
1C
d
H
H7/
a
c1
c2
g
V
Reference axis
g
h
V
V6/
Axis of low wattage filament
13/
24.0
26.0
31.0
Axis of high wattage filament
33.5
12/

Category H15 **Sheet H15/4**

Table of the dimensions (in mm) referred to in the drawings on sheet H15/3

*Reference**		*Dimension***		*Tolerance*			
				Filament light sources of normal production		*Standard filament light source*	
12 V	*24 V*	*12 V*	*24 V*	*12 V*	*24 V*	*12 V*	*24 V*
a/24.0	a/24.5	1.8		±0.35		±0.20	
a/26.0		1.8		±0.35		±0.20	
b1/31.0		0		±0.30		±0.15	
b1/33.5	b1/34.0	b1/31.0 mv		±0.30		±0.15	
b2/31.0		0		±0.30		±0.15	
b2/33.5	b2/34.0	b2/31.0 mv		±0.30		±0.15	
c1/31.0		0		±0.30	±0.50	±0.15	±0.25
c1/33.5	c1/34.0	c1/31.0 mv		±0.30	±0.50	±0.15	±0.25
c2/33.5	c2/34.0	1.1		±0.30	±0.50	±0.15	±0.25
d		min. 0.1		-		-	
f [8/, 9/, 10/]		2.7		±0.30	±0.40	+0.20 -0.10	+0.25 -0.15
g/24.0	g/24.5	0		±0.50	±0.70	±0.25	±0.35
g/26.0		0		±0.50	±0.70	±0.25	±0.35
h/31.0		0		±0.50	±0.60	±0.25	±0.30
h/33.5	h/34.0	h/31.0 mv		±0.30	±0.40	±0.15	±0.20
1_R [8/, 11/]		4.2	4.6	±0.40	±0.60	±0.20	±0.30
1_C [8/, 9/]		4.4	5.4	±0.40	±0.60	±0.20	±0.30
p/33.5	p/34.0	Depends on the shape of the shield		-		-	
q/33.5	q/34.0	p/33.5	p/34.0	±1.20		±0.60	

* "…/26.0" means dimension to be measured at the distance from the reference plane indicated in mm after the stroke.

** "31.0 mv" means the value measured at a distance of 31.0 mm from the reference plane.

6/ Plane V-V is the plane perpendicular to the reference plane and passing through the reference axis and through the axis of the reference lug.

7/ Plane H-H is the plane perpendicular to both the reference plane and plane V-V and passing through the reference axis.

8/ The end turns of the filament are defined as being the first luminous turn and the last luminous turn that are at substantially the correct helix angle.

9/ For the high wattage filament, the points to be measured are the intersections, seen in direction 1, of the lateral edge of the shield with the outside of the end turns defined under footnote 8/.

10/ "e" denotes the distance from the reference plane to the beginning of the driving-beam filament as defined above.

11/ For the low wattage filament the points to be measured are the intersections, seen in direction 1, of a plane, parallel to plane H-H and situated at a distance of 1.8 mm above it, with the end turns defined under footnote 8/.

12/ 34.0 for the 24 V type.

13/ 24.5 for the 24 V type.

Additional explanations to sheet H15/3

The dimensions below are measured in four directions:

1) For dimensions a, c1, c2, d, e, f, lR and lC;

2) For dimensions g, h, p and q;

3) For dimension b1;

4) For dimension b2.

Dimensions b1, b2, c1 and h are measured in planes parallel to the reference plane at distances of 31.0 mm and 33.5 mm (34.0 mm for 24 V types).

Dimensions c2, p and q are measured in a plane parallel to the reference plane at a distance of 33.5 mm (34.0 mm for 24 V types).

Dimensions a and g are measured in planes parallel to the reference plane at distances of 24.0 mm (24.5 mm for 24 V types) and 26.0 mm.

Categories H16 and H16B **Sheet H16/1**

The drawings are intended only to illustrate the essential dimensions (in mm) of the filament light source

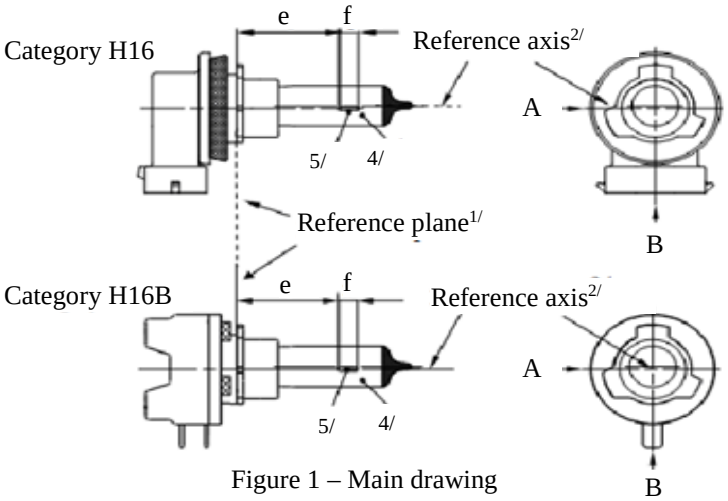

Figure 1 – Main drawing

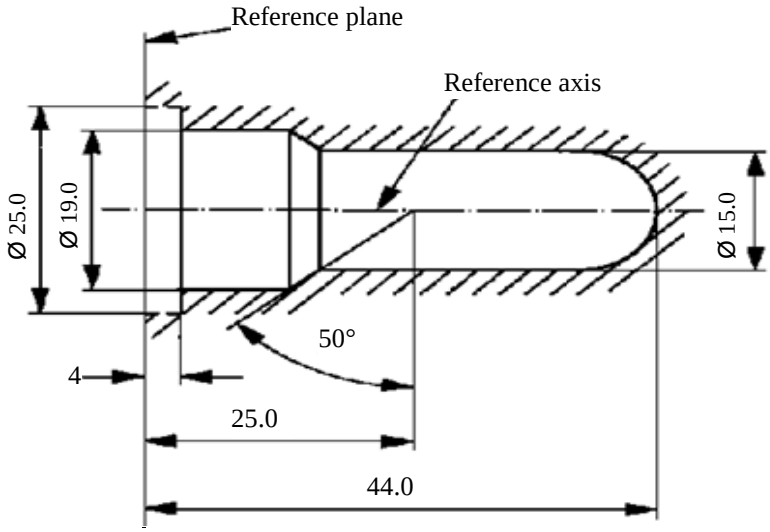

Figure 2 - Maximum filament light source outline3/

1/ The reference plane is the plane formed by the underside of the bevelled lead-in flange of the cap.

2/ The reference axis is perpendicular to the reference plane and passing through the centre of the 19 mm cap diameter.

3/ Glass bulb and supports shall not exceed the envelope as indicated in Figure 2. The envelope is concentric to the reference axis.

4/ The light emitted shall be white or selective yellow.

5/ Notes concerning the filament diameter.

(a) No actual diameter restrictions apply but the objective for future developments is to have d max. = 1.1 mm.

(b) For the same manufacturer, the design diameter of standard (étalon) filament light source and filament light source of normal production shall be the same.

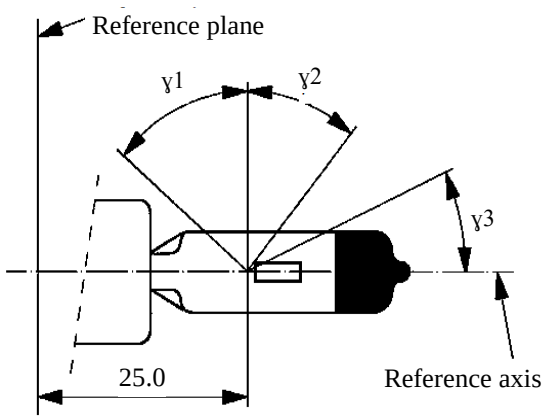

View B

Figure 3 - Distortion free area[6/] and black top[7/]

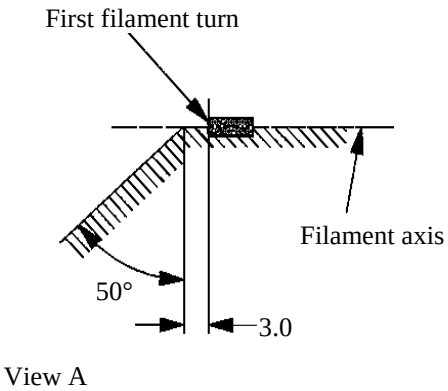

Figure 4 – Metal free zone[8/]

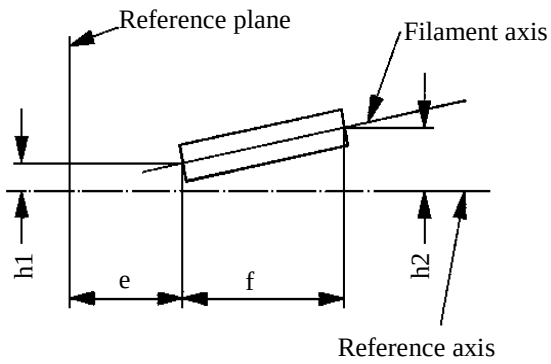

Figure 5 – Permissible offset of filament axis[9/]
(for standard filament light sources only)

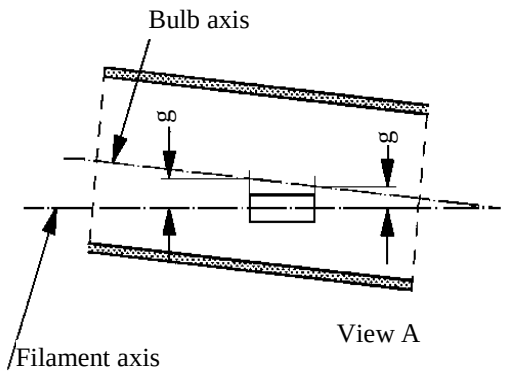

Figure 6 – Bulb eccentricity[10/]

6/ Glass bulb shall be optically distortion free within the angles γ1 and γ2. This requirement applies to the whole bulb circumference within the angles γ1 and γ2.

7/ The obscuration shall extend at least to angle γ3 and shall extend at least to the cylindrical part of the bulb on the whole bulb top circumference.

8/ The internal design of the filament light source shall be such that stray light images and reflections are only located above the filament itself seen from the horizontal direction. (View A as indicated in Figure 1 on sheet H16/1). No metal parts other than filament turns shall be located in the shaded area as seen in Figure 4.

9/ The offset of the filament with respect to the reference axis is measured only in viewing directions A and B as shown in Figure 1 in sheet H16/1. The points to be measured are those where the projection of the outside of the end turns nearest to or furthest from the reference plane crosses the filament axis.

10/ Offset of filament in relation to bulb axis measured in two planes parallel to the reference plane where the projection of the outside of the end turns nearest to or furthest from the reference plane crosses the filament axis.

Categories H16 and H16B **Sheet H16/3**

Dimensions in mm		*Filament light sources of normal production* 12 V	*Standard filament light source* 12 V
e [11/]		25.0 [12/]	25.0 ± 0.1
f [11/]		3.2 [12/]	3.2 ± 0.1
g		0.5 min.	u.c.
h1		0 [12/]	0 ± 0.1
h2		0 [12/]	0 ± 0.15
γ1		50° min.	50° min.
γ2		40° min.	40° min.
γ3		30° min.	30° min.
Cap:	H16: PGJ19-3	in accordance with IEC Publication 60061 (sheet 7004-110-2)	
	H16B: PGJY19-3	in accordance with IEC Publication 60061 (sheet 7004-146-1)	
Electrical and photometric characteristics			
Rated values	Volts	12	12
	Watts	19	19
Test voltage	Volts	13.2	13.2
Objective values	Watts	26 max.	26 max.
	Luminous flux	500 +10 % / -15 %	
Reference luminous flux: 370 lm at approximately 12 V			370 lm
Reference luminous flux: 500 lm at approximately 13.2 V			500 lm
Reference luminous flux: 550 lm at approximately 13.5 V			550 lm

[11/] The ends of the filament are defined as the points where, when the viewing direction is direction A as shown in Figure 1 on sheet H16/1, the projection of the outside of the end turns crosses the filament axis.

[12/] To be checked by means of a "Box system"; sheet H16/4.

Screen projection requirements

This test is used to determine, by checking whether the filament is correctly positioned relative to the reference axis and reference plane, whether a filament complies with the requirements.

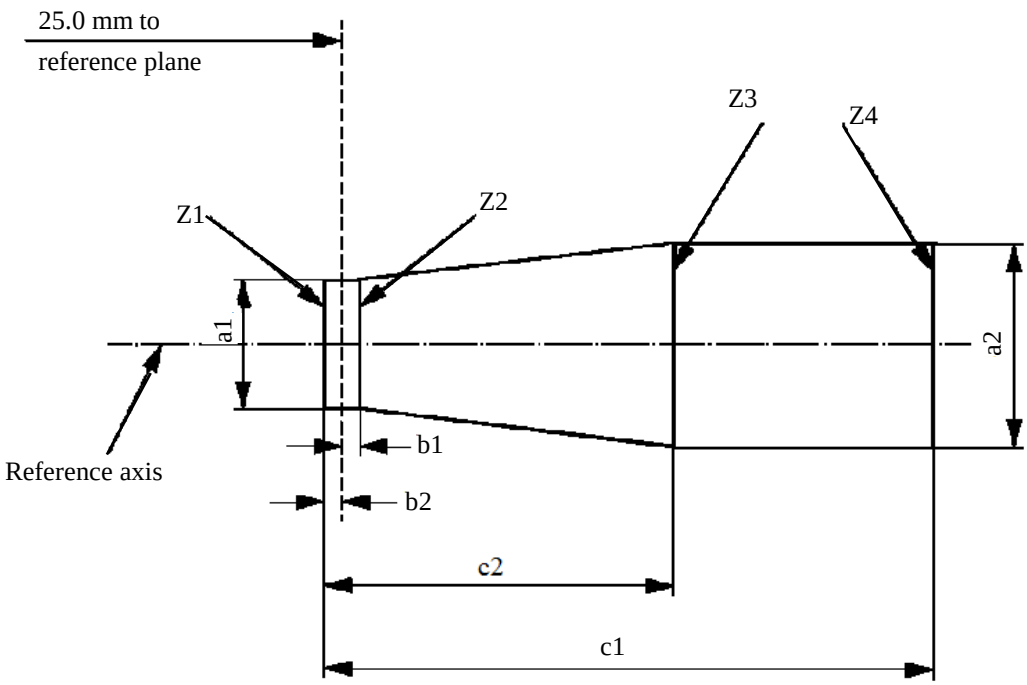

a1	*a2*	*b1*	*b2*	*c1*	*c2*
d + 0.50	d + 0.70	0.25		3.6	2.6

d = diameter of filament

The filament position is checked solely in directions A and B as shown on sheet H16/1, Figure 1.

The filament shall lie entirely within the limits shown.

The ends of the filament as defined on sheet H16/3, footnote 11/, shall lie between lines Z1 and Z2 and between Z3 and Z4.

Category H17 **Sheet H17/1**

The drawings are intended only to illustrate the essential dimensions (in mm) of the filament light source

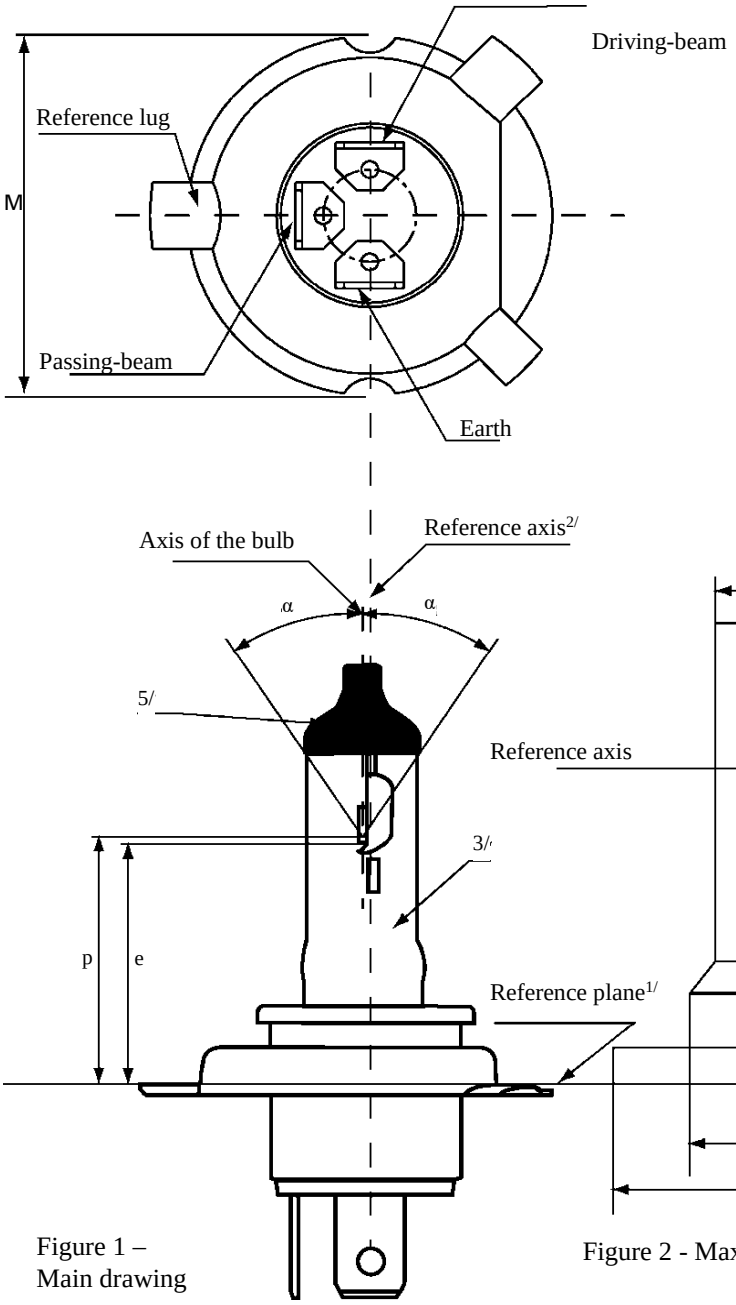

Figure 1 –
Main drawing

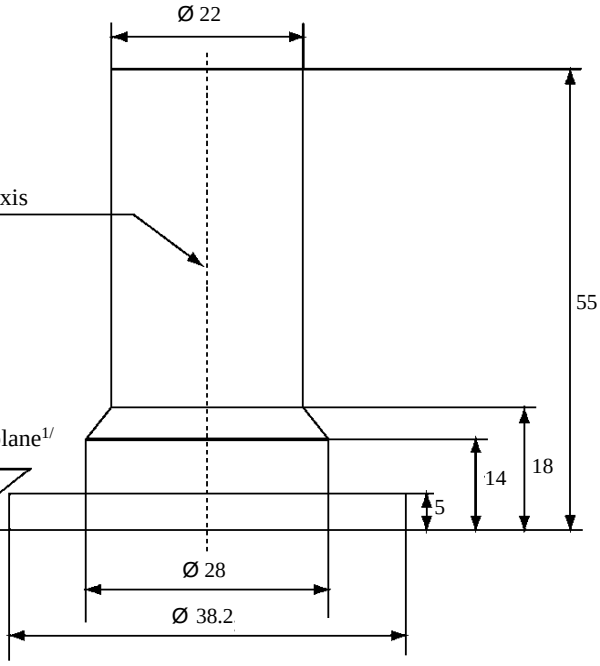

Figure 2 - Maximum filament light source outlines4/

For the notes see sheet H17/6

Dimensions in mm		*Filament light sources of normal production*		*Standard filament light source*	
		12 V		*12 V*	
e		28.5 + 0.35 / - 0.15		28.5 + 0.20 / - 0.0	
p		28.95		28.95	
α		max. 40°		max. 40°	
Cap PU43t-4 in accordance with IEC Publication 60061 (sheet 7004-171-2)					
Electrical and photometric characteristics					
Rated values	Volts	12 [6/]		12 [6/]	
	Watts	35	35	35	35
Test voltage	Volts	13.2	13.2	13.2	13.2
Objective values	Watts	37 max.	37 max.	37 max.	37 max.
	Luminous flux	900 ± 10 %	600 ± 10 %		
Reference luminous flux at approximately			12.0 V	700	450
			13.2 V	900	600

For note 6/ see sheet H17/6

Category H17 **Sheet H17/3**

Position of the shield

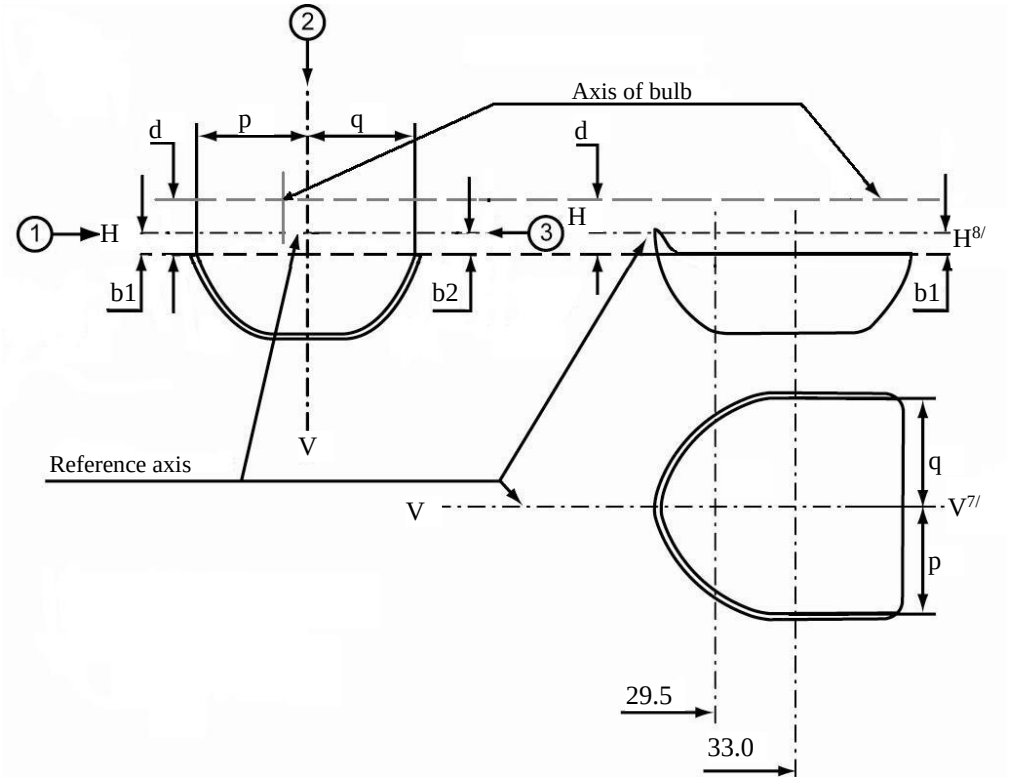

Position of filaments

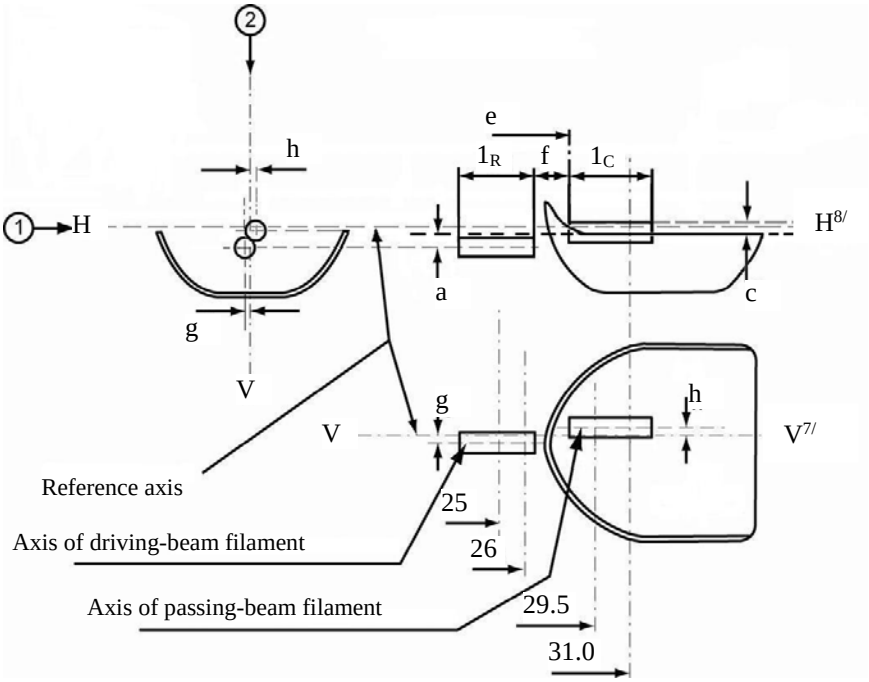

Category H17 **Sheet H17/5**

Table of the dimensions (in mm) referred to in the drawings on sheets H17/3 and H17/4

*Reference**	*Dimension***	*Tolerance*	
		Filament light sources of normal production	*Standard filament light source*
a/25.0	0.3	±0.40	±0.20
a/26.0	0.3	±0.35	±0.20
b1/29.5	0.0	±0.30	±0.25
b1/33.0	b1/29.5 mv	±0.30	±0.15
b2/29.5	0.0	±0.30	±0.25
b2/33.0	b2/29.5 mv	±0.30	±0.15
c/29.5	0.5	±0.25	±0.15
c/31.0	c/29.5 mv	±0.25	±0.15
d	min. 0.1	-	-
e [11/]	28.5	+0.35 / -0.15	+0.20 / -0.0
f [9/, 10/, 11/]	1.7	±0.30	±0.15
g/25.0	0	±0.50	±0.30
g/26.0	0	±0.40	±0.25
h/29.5	0	±0.40	±0.25
h/31.0	h/29.5 mv	±0.30	±0.15
l_R [9/, 12/]	4.0	±0.40	±0.20
l_C [9/, 10/]	4.2	±0.40	±0.20
p/33.0	Depends on the shape of the shield	-	-
q/33.0	(p+q)/2	±0.60	±0.30

* "../25.0" means dimension to be measured at the distance from the reference plane indicated in mm after the stroke.

** "29.5 mv" means the value measured at a distance of 29.5 mm from the reference plane.

For the notes see sheet H17/6

1/ The reference plane is the plane formed by the seating points of the three lugs of the cap ring.

2/ The reference axis is perpendicular to the reference plane and passes through the centre of the circle of diameter "M".

3/ The light emitted from standard filament light sources and from normal production filament light sources shall be white.

4/ The bulb and supports shall not exceed the envelope as in Figure 2.

5/ The obscuration shall extend at least as far as the cylindrical part of the bulb. It shall also overlap the internal shield when the latter is viewed in a direction perpendicular to the reference axis.

6/ The value indicated in the left hand column relate to the driving beam filament. Those indicated in the right-hand column relate to the passing-beam filament.

7/ Plane V-V is the plane perpendicular to the reference plane and passing through the reference axis and through the intersection of the circle of diameter "M" with the axis of the reference lug.

8/ Plane H-H is the plane perpendicular to both the reference plane and plane V-V and passing through the reference axis.

9/ The end turns of the filament are defined as being the first luminous turn and the last luminous turn that are at substantially the correct helix angle.

10/ For the passing beam filament, the points to be measured are the intersections, seen in direction 1, of the lateral edge of the shield with the outside of the end turns defined under note 9/.

11/ "e" denotes the distance from the reference plane to the beginning of the passing filament as defined above.

12/ For the driving beam filament the points to be measured are the intersections, seen in direction 1, of a plane, parallel to plane H-H and situated at a distance of 0.3 mm below it, with the end turns defined under note 9/.

Additional explanations to sheets H17/3 and H17/4

The dimensions below are measured in three directions:

1 For dimensions b1, a, c, d, e, f, l_R and l_C.
2 For dimensions g, h, p and q.
3 For dimension b2.

Dimensions p and q are measured in planes parallel to and 33.0 mm away from the reference plane.

Dimensions b1, b2 are measured in planes parallel to and 29.5 mm and 33.0 mm away from the reference plane.

Dimensions c and h are measured in planes parallel to and 29.5 mm and 31.0 mm away from the reference plane.

Dimensions a and g are measured in planes parallel to and 25.0 mm and 26.0 mm away from the reference plane.

Note: For the method of measurement, see Appendix E to IEC Publication 60809.

The drawings are intended only to illustrate the essential dimensions (in mm) of the filament light source

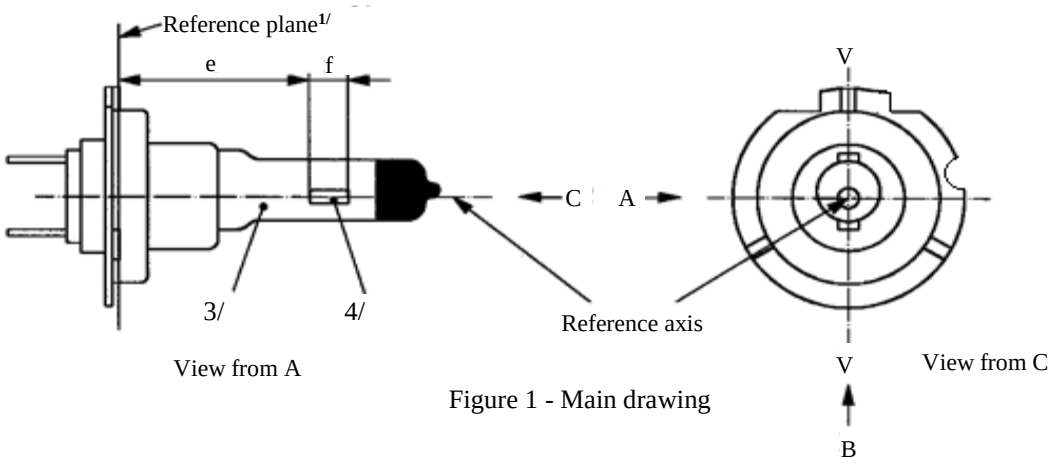

Figure 1 - Main drawing

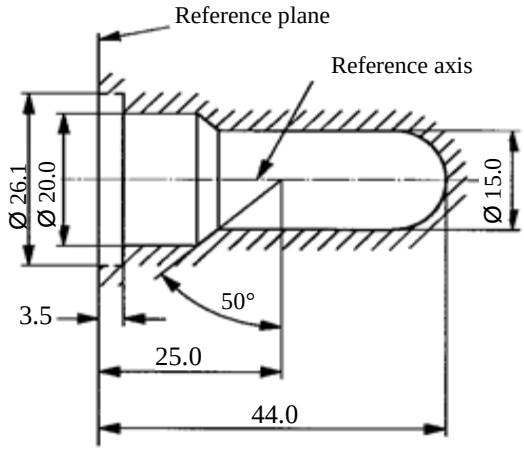

Figure 2 - Maximum filament light source outline 5/

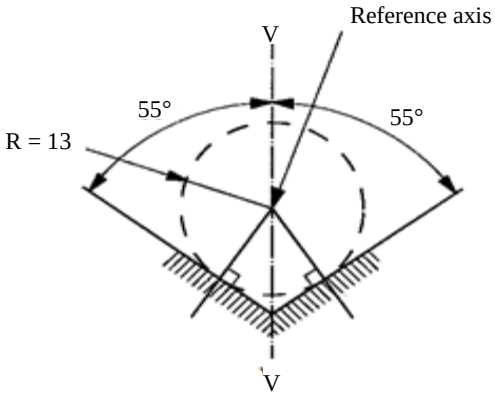

Figure 3 - Definition of reference axis 2/

1/ The reference plane is defined by the points on the surfaces of the holder on which the three supporting bosses of the cap ring will rest.

2/ The reference axis is perpendicular to the reference plane and crosses the intersection of the two perpendiculars as indicated in Figure 3.

3/ The colour of the light emitted shall be white or selective-yellow.

4/ Notes concerning the filament diameter.

(a) No actual diameter restrictions apply but the design target is d max. = 1.3 mm.

(b) For the same manufacturer, the design diameter of standard (étalon) filament light source and filament light source of normal production shall be the same.

5/ Glass bulb and supports shall not exceed the envelope as indicated in Figure 2. The envelope is concentric to the reference axis.

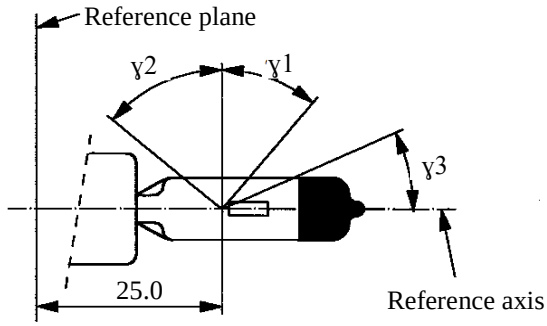

View from B

Figure 4 - Distortion free area and black top[6/, 7/]

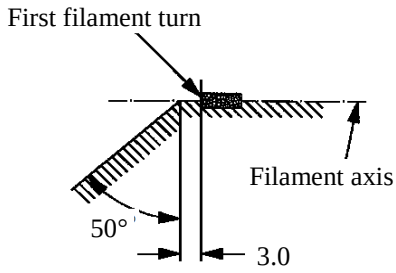

View from A

Figure 5 - Metal free zone[8/]

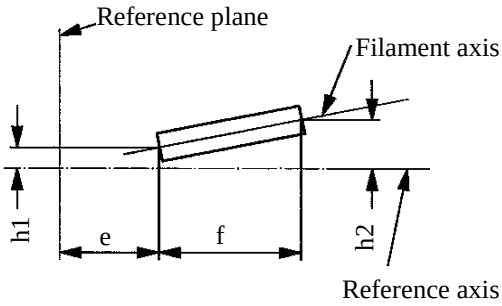

Figure 6 - Permissible offset of filament axis
(for standard filament light sources only)

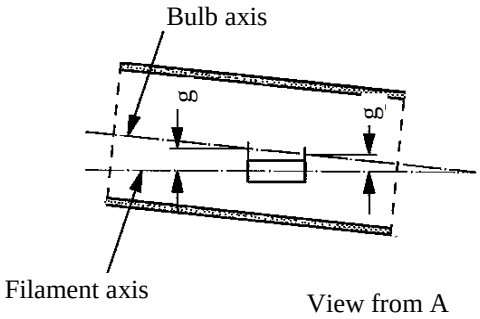

View from A

Figure 7 - Bulb eccentricity

6/ Glass bulb shall be optically distortion free within the angles γ1 and γ2. This requirement applies to the whole bulb circumference within the angles γ1 and γ2.

7/ The obscuration shall extend at least to the cylindrical part of the bulb on the whole bulb top circumference. It shall moreover extend at least to a plane parallel to the reference plane where γ3 crosses the outer bulb surface (view B as indicated on sheet H18/1).

8/ The internal design of the filament light source shall be such that stray light images and reflections are only located above the filament itself seen from the horizontal direction. (View A as indicated in Figure 1 on sheet H18 /1).
No metal parts other than filament turns shall be located in the shaded area as seen in Figure 5.

Category H18 **Sheet H18/3**

		Filaments light sources of normal production	*Standard filament light source*
		12 V	*12 V*
e [9/]		25.0 [10/]	25.0 ± 0.1
f [9/]		4.8[10/]	4.8± 0.1
g [12/]		0.5 min.	u.c.
h1 [11/]		0 [10/]	0 ± 0.10
h2 [11/]		0 [10/]	0 ± 0.15
γ1		40° min.	40° min.
γ2		50° min.	50° min.
γ3		30° min.	30° min.
Cap PY26d-1 in accordance with IEC Publication 60061 (sheet 7004-5-7)			
Electrical and photometric characteristics			
Rated values	Volts	12	12
	Watts	65	65
Test voltage	Volts	13.2	13.2
Objective values	Watts	69 max.	69 max.
	Luminous flux	1,700 ± 8 %	
Reference luminous flux at approximately		13.2 V	1,700

9/ The ends of the filament are defined as the points where, when the viewing direction is direction A as shown in Figure 1 on sheet H18/1, the projection of the outside of the end turns crosses the filament axis.

10/ To be checked by means of a "Box System", sheet H18/4.

11/ The offset of the filament with respect to the reference axis is measured only in viewing directions A and B as shown in Figure 1 in sheet H18/1. The points to be measured are those where the projection of the outside of the end turns nearest to or furthest from the reference plane crosses the filament axis.

12/ Offset of filament in relation to bulb axis measured in two planes parallel to the reference plane where the projection of the outside of the end turns nearest to or furthest from the reference plane crosses the filament axis.

Screen projection requirements

This test is used to determine, by checking whether the filament is correctly positioned relative to the reference axis and reference plane, whether a filament light source complies with the requirements.

Dimensions in mm

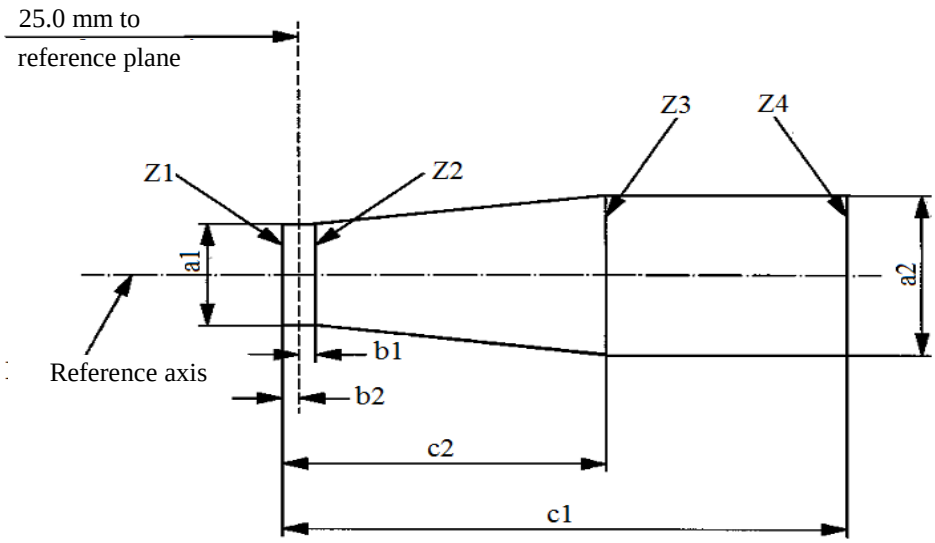

	a1	*a2*	*b1*	*b2*	*c1*	*c2*
12 V	d + 0.30	d + 0.50		0.2	5.3	4.7

d = diameter of filament

The filament position is checked solely in directions A and B as shown on sheet H18/1, Figure 1.

The filament shall lie entirely within the limits shown.

The ends of the filament as defined on sheet H18/3, note 9, shall lie between lines Z1 and Z2 and between Z3 and Z4.

The drawings are intended only to illustrate the essential dimensions (in mm) of the filament lamp.

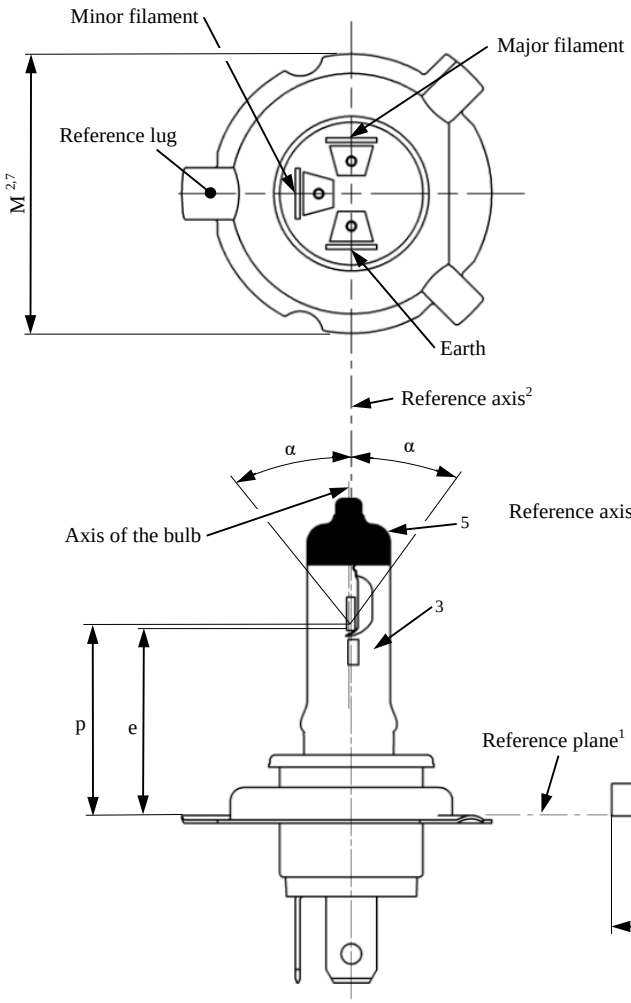

Figure 1
Main drawing

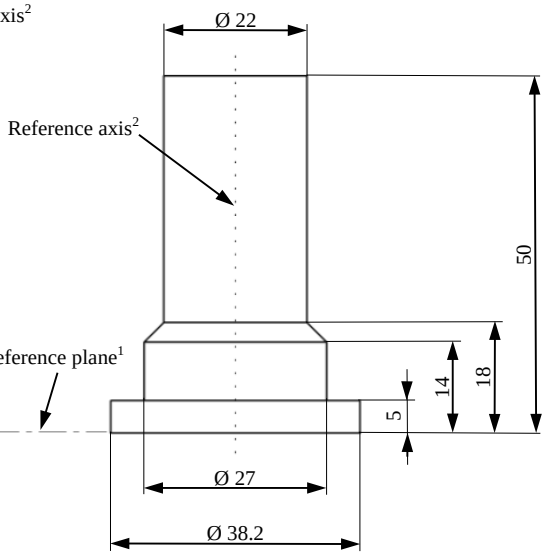

Figure 2
Maximum lamp outlines4

For the notes see sheet H19/5.

The drawings are intended only to illustrate the essential dimensions (in mm) of the filament light source.

Dimensions in mm		*Filament lamps of normal production*		*Standard filament lamps*	
		12 V		*12 V*	
e		28.5 + 0.35 / - 0.15		28.5 + 0.20 / - 0.0	
p		28.95		28.95	
α		max. 45°		max. 45°	
Cap PU43t-3 in accordance with IEC Publication 60061 (sheet 7004-171-1)					
Electrical and photometric characteristics					
Rated values	Volts	12[6]		12[6]	
	Watts	60	55	60	55
Test values	Volts	13.2	13.2	13.2	13.2
Objective values	Watts	72 max.	68 max.	72 max.	68 max.
	Luminous flux	1 750 ± 10%	1 200 ± 10%		
Reference luminous flux at approximately			13.2 V	1 750	1 200

For note 6 see sheet H19/5.

Category H19 **Sheet H19/3**

Position of shield

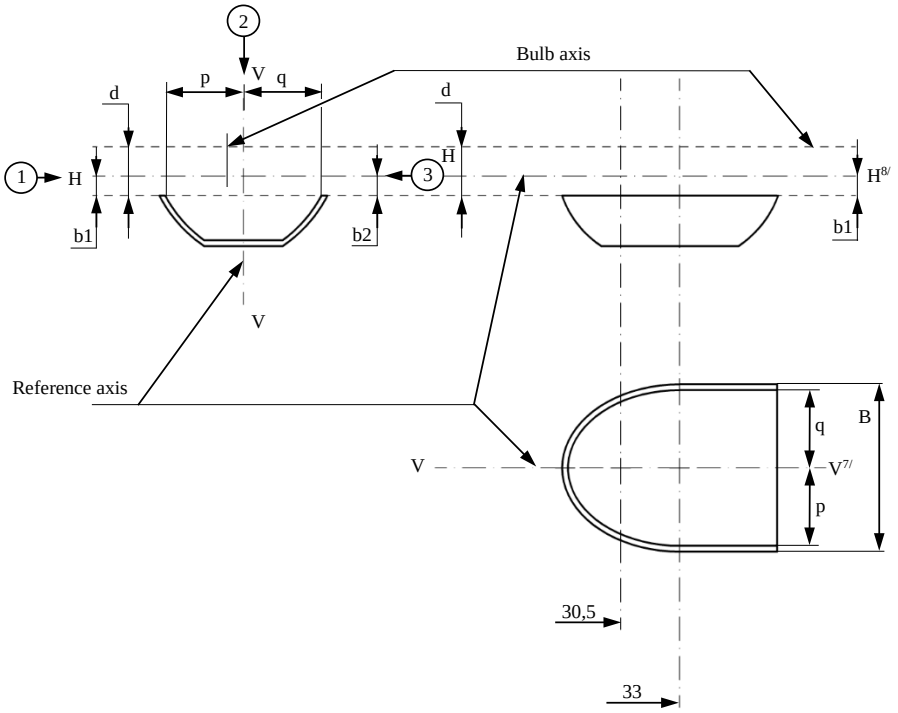

Position of filament

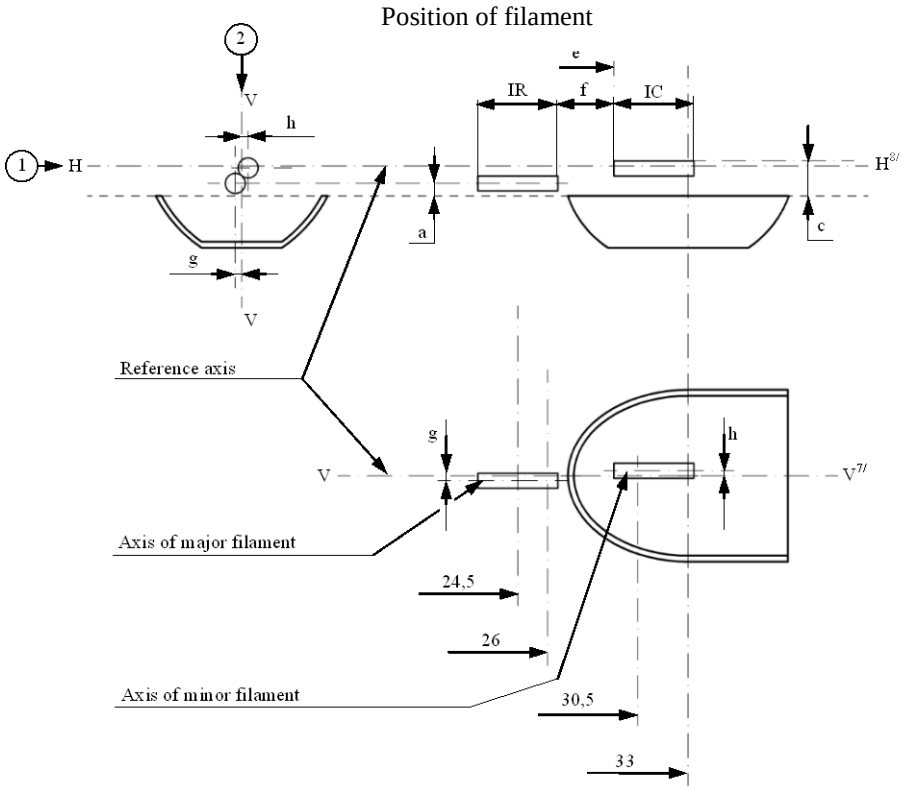

Table of the dimensions (in mm) referred to in the drawings on sheet H19/3

*Reference**	*Dimension***	*Tolerance*	
		Filament lamps of normal production	*Standard filament*
a/26.0	0.7	±0.30	±0.20
a/24.5	0.7	±0.40	±0.20
b1/30.5	1.0	±0.30	±0.25
b1/33.0	b1/30.5 mv	±0.30	±0.15
b2/30.5	1.0	±0.30	±0.25
b2/33.0	b2/30.5 mv	±0.30	±0.15
c/30.5	1.7	±0.25	±0.15
c/33	c/30.5 mv	±0.25	±0.15
d	min. 1.1	-	-
e[11]	28.5	+0.35 / -0.15	+0.20 / -0.0
f [9, 10, 11]	1.4	±0.30	±0.15
g/26.0	0	±0.40	±0.25
g/24.5	0	±0.50	±0.30
h/30.5	0	±0.40	±0.25
h/33.0	h/30.5 mv	±0.30	±0.15
lR [9, 12]	4.0	±0.60	±0.30
lC [9, 10]	5.2	±0.60	±0.30
p/33.0	Depends on the shape of the shield	-	-
q/33.0	(p+q)/2	±0.50	±0.30
B/33.0	8.6	±0.30	±0.30

* "../24.5" means dimension to be measured at the distance from the reference plane indicated in mm after the stroke.

** "../30.5 mv" means the value measured at a distance of 30.5 mm from the reference plane.

For the notes see sheet H19/5.

[1] The reference plane is the plane formed by the seating points of the three lugs of the cap ring.
[2] The reference axis is perpendicular to the reference plane and passes through the centre of the circle of diameter "M".
[3] The light emitted from standard filament lamps and from normal production lamps shall be white.
[4] The bulb and supports shall not exceed the envelope as in Figure 2.
[5] The obscuration shall extend, at least, as far as the cylindrical part of the bulb. It shall also overlap the internal shield when the latter is viewed in a direction perpendicular to the reference axis.
[6] The values indicated in the left hand column relate to the major filament. Those indicated in the right-hand column relate to the minor filament.
[7] Plane V-V is the plane perpendicular to the reference plane and passing through the reference axis and through the intersection of the circle of diameter "M" with the axis of the reference lug.
[8] Plane H-H is the plane perpendicular to both the reference plane and plane V-V and passing through the reference axis.
[9] The end turns of the filament are defined as being the first luminous turn and the last luminous turn that are at substantially the correct helix angle.
[10] For the minor filament, the points to be measured are the intersections, seen in direction 1, of either the lateral edge of the shield or the filament axis with the outside of the end turns defined under note 9.
[11] "e" denotes the distance from the reference plane to the beginning of the minor filament as defined above.
[12] For the major filament the points to be measured are the intersections, seen in direction 1, of a plane, parallel to plane H-H and situated at a distance of 0.3 mm below it, with the end turns defined under note 9.

Additional explanations to sheet H19/3

The dimensions below are measured in three directions:

1 For dimensions b1, a, c, d, e, f, lR and lC.
2 For dimensions g, h, p, q and B.
3 For dimension b2.

Dimensions B, p and q are measured in planes parallel to and 33.0 mm away from the reference plane.

Dimensions b1, b2 are measured in planes parallel to and 30.5 mm and 33.0 mm away from the reference plane.

Dimensions c and h are measured in planes parallel to and 30.5 mm and 33.0 mm away from the reference plane.

Dimensions a and g are measured in planes parallel to and 24.5 mm and 26.0 mm away from the reference plane.

Note: For the method of measurement, reference is made to Appendix E of IEC Publication 60809.

The drawings are intended only to illustrate the essential dimensions (in mm) of the filament light source

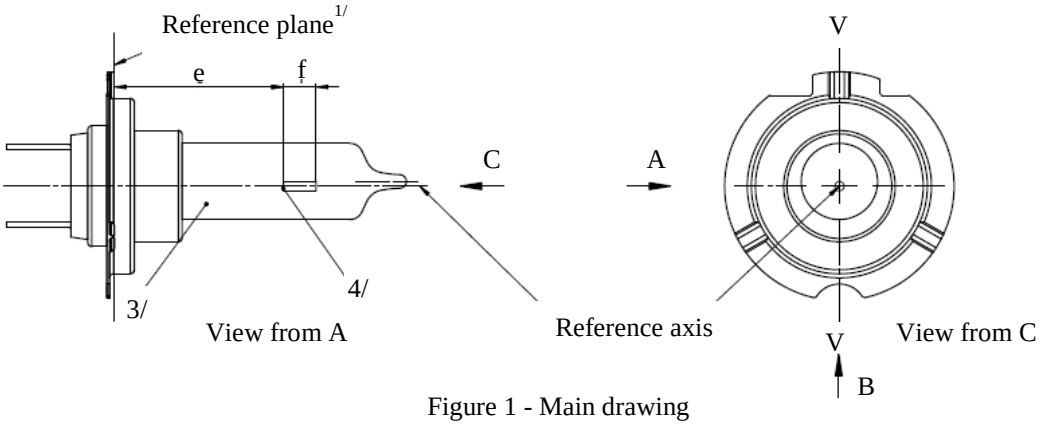

Figure 1 - Main drawing

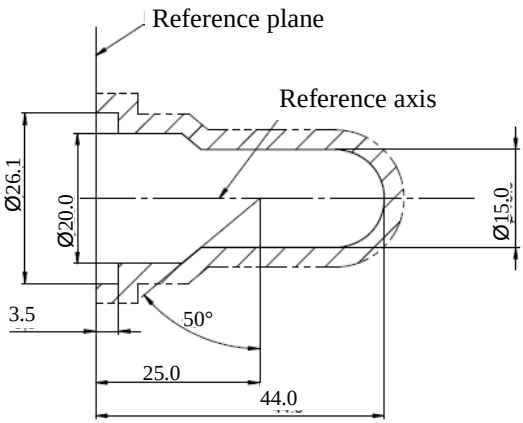

Figure 2 - Maximum filament light source outline[5/]

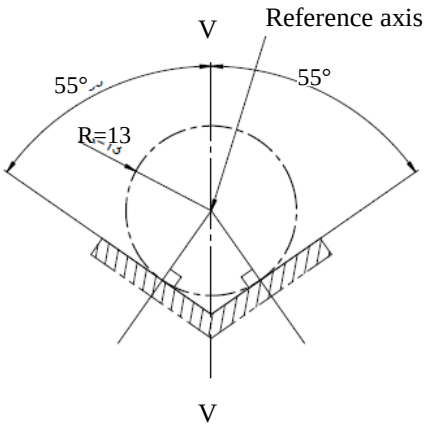

Figure 3 - Definition of reference axis[2/]

1/ The reference plane is defined by the points on the surfaces of the holder on which the three supporting bosses of the cap ring will rest.

2/ The reference axis is perpendicular to the reference plane and crosses the intersection of the two perpendiculars as indicated in Figure 3.

3/ The colour of the light emitted shall be white with the restriction according to sheet H20/3.

4/ Notes concerning the filament diameter:

(a) No actual diameter restrictions apply but the design target is to have d max. = 1.4 mm.

(b) For the same manufacturer, the design diameter of standard (étalon) filament light source and filament light source of normal production shall be the same.

5/ Glass bulb and supports shall not exceed the envelope as indicated in Figure 2. The envelope is concentric to the reference axis.

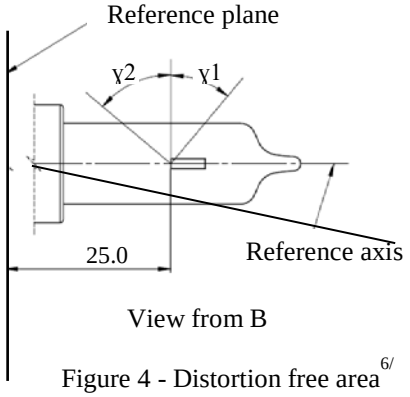

Figure 4 - Distortion free area[6/]

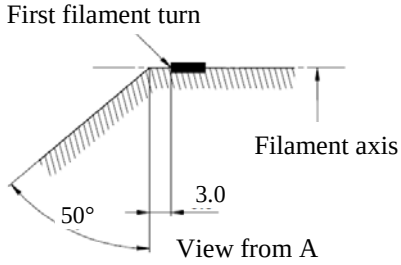

Figure 5 - Metal free zone[7/]

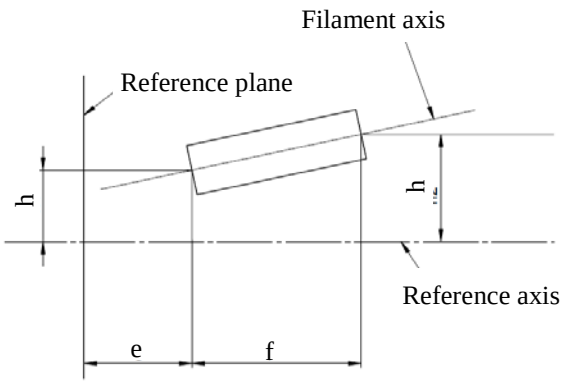

Figure 6 - Permissible offset of filament axis
(for standard filament light sources only)

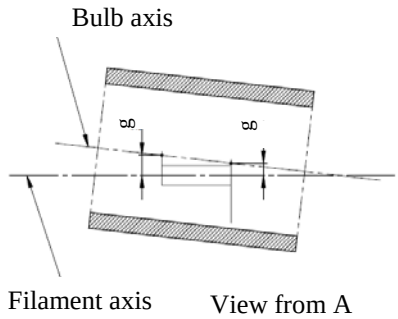

Figure 7 - Bulb eccentricity

6/ Glass bulb shall be optically distortion free within the angles γ1 and γ2. This requirement applies to the whole bulb circumference within the angles γ1 and γ2.

7/ The internal design of the filament light source shall be such that stray light images and reflections are only located above the filament itself seen from the horizontal direction. (View A as indicated in Figure 1 on sheet H20/1).
No metal parts other than filament turns shall be located in the shaded area as seen in Figure 5.

Dimensions in mm			*Filaments light sources of normal production*	*Standard filament light source*
			12 V	*12 V*
e [8/]			25.0 [9/]	25.0 ± 0.1
f [8/]			4.8 [9/]	4.8 ± 0.1
g [11/]			0.5 min.	0.5 min.
h1 [10/]			0 [9/]	0 ± 0.10
h2 [10/]			0 [9/]	0 ± 0.15
γ1			40° min.	40° min.
γ2			50° min.	50° min.
Cap PY26d-6 in accordance with IEC Publication 60061 (sheet 7004-5-7)				
Electrical and photometric characteristics				
Rated values	Volts		12	12
	Watts		70	70
Test voltage	Volts		13.2	13.2
Objective values	Watts		75 max.	75 max.
	Luminous flux		1 250 ± 10 %	
Reference luminous flux at approximately			12 V	900
			13.2 V	1250
Chromaticity Coordinates	Objective		x=0.347	y=0.353
	Tolerance area	Boundaries	x=0.330	y=0.150+0.640x
			x=0.370	y=0.050+0.750x
		Intersection points	x=0.330	y=0.298
			x=0.370	y=0.327
			x=0.370	y=0.387
			x=0.330	y=0.361

8/ The ends of the filament are defined as the points where, when the viewing direction is direction A as shown in Figure 1 on sheet H20/1, the projection of the outside of the end turns crosses the filament axis. (Special instructions for coiled-coil filaments are under consideration).

9/ To be checked by means of a "Box System", sheet H20/4.

10/ The offset of the filament with respect to the reference axis is measured only in viewing directions A and B as shown in Figure 1 in sheet H20/1. The points to be measured are those where the projection of the outside of the end turns nearest to or furthest from the reference plane crosses the filament axis.

11/ Offset of filament in relation to bulb axis measured in two planes parallel to the reference plane where the projection of the outside of the end turns nearest to or furthest from the reference plane crosses the filament axis.

Screen projection requirements

This test is used to determine, by checking whether the filament is correctly positioned relative to the reference axis and reference plane, whether a filament light source complies with the requirements.

Dimensions in mm

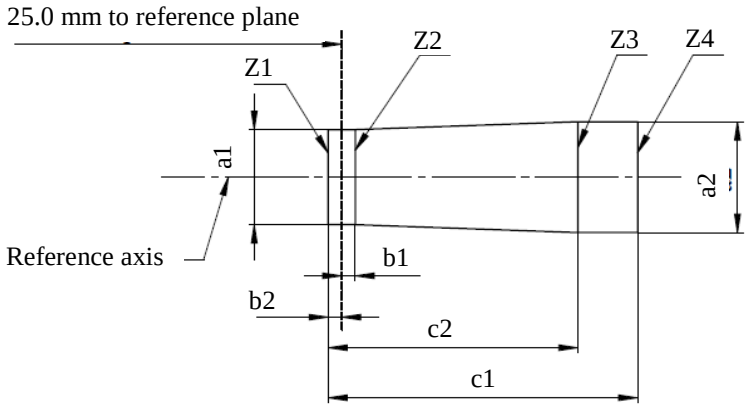

a1	*a2*	*b1*	*b2*	*c1*	*c2*
d + 0.40	d + 0.70	0.25		5.7	4.6

d = diameter of filament

The filament position is checked solely in directions A and B as shown on sheet H20/1, Figure 1.

The filament shall lie entirely within the limits shown.

The ends of the filament as defined on sheet H20/3, note 9, shall lie between lines Z1 and Z2 and between Z3 and Z4.

The drawings are intended only to illustrate the essential dimensions (in mm) of the filament light source

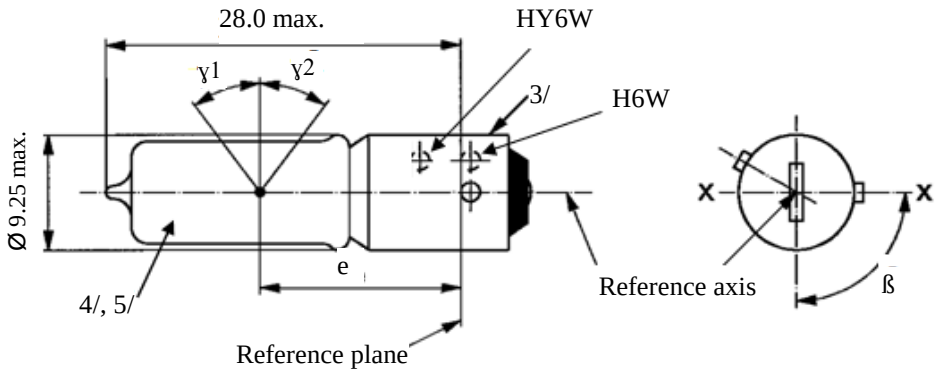

Dimensions in mm			*Filament light sources of normal production*			*Standard filament light source*
			Min.	*Nom.*	*Max.*	
e			14.25	15.0	15.75	15.0 ± 0.25
Lateral deviation [1/]					0.75	0.4 max
β			82.5°	90°	97.5°	90° ± 5°
γ1, γ2 [2/]			30°			30° min.
Cap:	H6W:	BAX9s	in accordance with IEC Publication 60061 (sheet 7004-8-1)			
	HY6W:	BAZ9s	in accordance with IEC Publication 60061 (sheet 7004-150-1)			
Electrical and photometric characteristics						
Rated values	Volts		12			12
	Watts		6			6
Test	Volts		13.5			13.5
Objective values	Watts		7.35 max.			7.35 max.
	Luminous flux	H6W	125 ± 12 %			
		HY6W	75 ± 17 %			
Reference luminous flux at approximately 13.5 V						White: 125 lm Amber: 75 lm

1/ Maximum lateral deviation of filament centre from two mutually perpendicular planes both containing the reference axis and one containing axis X-X.

2/ In the area between the outer legs of the angles γ1 and γ2, the bulb shall have no optically distorting areas and the curvature of the bulb shall have a radius not less than 50 per cent of the actual bulb diameter.

3/ Over the entire length of the cap there shall be no projections or soldering exceeding the permissible maximum diameter of the cap.

4/ The light emitted from filament light sources of normal production shall be white for category H6W and amber for category HY6W.

5/ The light emitted from standard filament light sources shall be white for category H6W and amber or white for category HY6W.

Categories H10W/1 and HY10W **Sheet H10W/1**

The drawings are intended only to illustrate the essential dimensions (in mm) of the filament light source

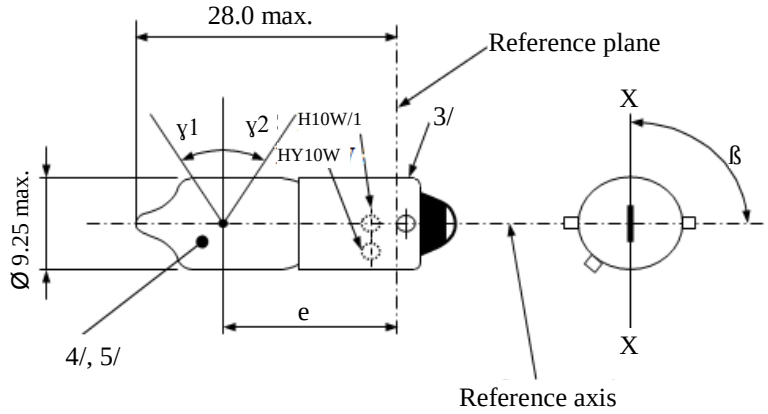

Dimensions in mm			*Filament light sources of normal production*			*Standard filament light source*
			Min.	*Nom.*	*Max.*	
e			14.25	15.0	15.75	15.0 ± 0.25
Lateral deviation [1/]					0.75	0.4 max
β			82.5°	90°	97.5°	90° ± 5°
γ1, γ2 [2/]			30°			30° min.
Cap:	H10W/1	BAU9s	in accordance with IEC Publication 60061 (sheet 7004-150A-1)			
	HY10W	BAUZ9s	in accordance with IEC Publication 60061 (sheet 7004-150B-1)			
Electrical and photometric characteristics						
Rated values	Volts		12			12
	Watts		10			10
Test voltage	Volts		13.5			13.5
Objective values	Watts		12 max.			12 max.
	Luminous flux	H10W/1	200 ± 12 %			
		HY10W	120 ± 17 %			
Reference luminous flux at approximately 13.5 V						White: 200 lm Amber: 120 lm

1/ Maximum lateral deviation of filament centre from two mutually perpendicular planes both containing the reference axis and one containing axis X-X.

2/ In the area between the outer legs of the angles $\gamma 1$ and $\gamma 2$, the bulb shall have no optically distorting areas and the curvature of the bulb shall have a radius not less than 50 per cent of the actual bulb diameter.

3/ Over the entire length of the cap there shall be no projections or soldering exceeding the permissible maximum diameter of the cap.

4/ The light emitted from filament light sources of normal production shall be white for category H10W/1 and amber for category HY10W.

5/ The light emitted from standard filament light sources shall be white for category H10W/1 and amber or white for category HY10W.

Categories H21W and HY21W **Sheet H21W/1**

The drawings are intended only to illustrate the essential dimensions (in mm) of the filament light source.

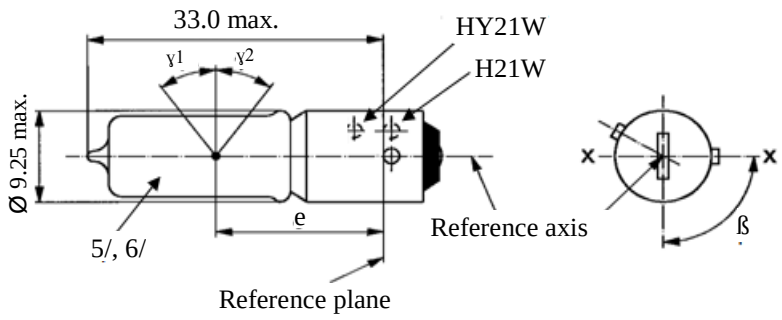

Dimensions in mm			Filament light sources of normal production			Standard filament light source
			Min.	Nom.	Max.	
e				20.0 1/		20.0 ± 0.25
f	12 V				3.8	3.8 + 0 / -1
	24 V				4.5	
Lateral deviation 2/					1/	0.0 ± 0.15 3/
β			82.5°	90°	97.5°	90° ± 5°
γ1, γ2 4/			45°			45° min.
Cap:	H21W: BAY9s	in accordance with IEC Publication 60061 (sheet 7004-9-1)				
	HY21W: BAW9s	in accordance with IEC Publication 60061 (sheet 7004-149-1)				
Electrical and photometric characteristics						
Rated values	Volts		12		24	12
	Watts		21		21	21
Test voltage	Volts		13.5		28.0	13.5
Objective values	Watts		26.25 max.		29.4 max.	26.25 max.
	Luminous flux	H21W	600 ± 12 %		600 ± 15 %	
		HY21W	300 ± 17 %		300 ± 20 %	
Reference luminous flux at approximately					12 V	White: 415 lm
					13.2 V	White: 560 lm
					13.5 V	White: 600 lm Amber: 300 lm

1/ To be checked by means of a "Box system", sheet H21W/2.

2/ Maximum lateral deviation of filament centre from two mutually perpendicular planes both containing the reference axis and one containing axis X-X.

3/ The lateral deviation with respect to the plane perpendicular to axis X-X is measured in the position described in paragraph 1. of the test procedure specified on sheet H21W/2.

4/ In the area between the outer legs of the angles γ1 and γ2, the bulb shall have no optical distorting areas and the curvature of the bulb shall have a radius not less than 50 per cent of the actual bulb diameter.

5/ The light emitted from filament light sources of normal production shall be white for category H21W and amber for category HY21W.

6/ The light emitted from standard filament light sources shall be white for category H21W and amber or white for category HY21W.

Screen projection requirements

This test is used to determine, by checking whether the filament is correctly positioned relative to the reference axis and reference plane and has an axis perpendicular, within ±7.5°, to the plane through the centre line of the reference pin and the reference axis, whether a filament light source complies with the requirements.

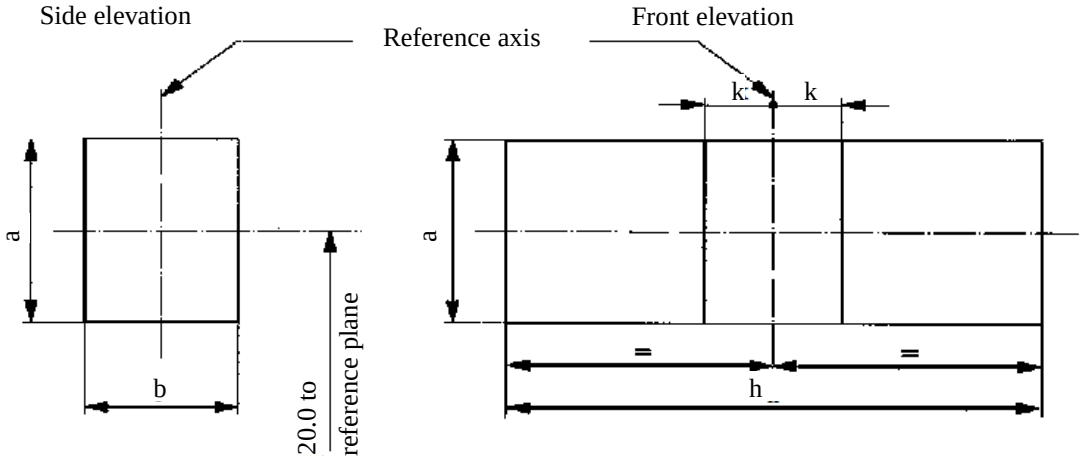

Reference	*a*	*b*	*h*	*k*
Dimension	d + 1.0	d +1.0	f + 1.2	0.50

d = actual filament diameter
f = actual filament length

Test procedures and requirements

1. The filament light source is placed in a holder capable of being rotated about its axis and having either a calibrated scale or fixed stops corresponding to the angular displacement tolerance limits. The holder is then so rotated that an end view of the filament is seen on the screen on to which the image of the filament is projected. The end view of the filament shall be obtained within the angular displacements tolerance limits.

2. Side elevation

   The filament light source placed with the cap down, the reference axis vertical and the filament seen end-on, the projection of the filament shall lie entirely within a rectangle of height "a" and width "b", having its centre at the theoretical position of the centre of the filament.

3. Front elevation

   The filament light source placed with the cap down and the reference axis vertical, the filament light source being viewed in a direction at right angles to the filament axis:

3.1. The projection of the filament shall lie entirely within a rectangle of height "a" and width "h", having its centre at the theoretical position of the centre of the filament;

3.2. The centre of the filament shall not be offset by more than distance "k" from the reference axis.

The drawings are intended only to illustrate the essential dimensions (in mm) of the filament light source.

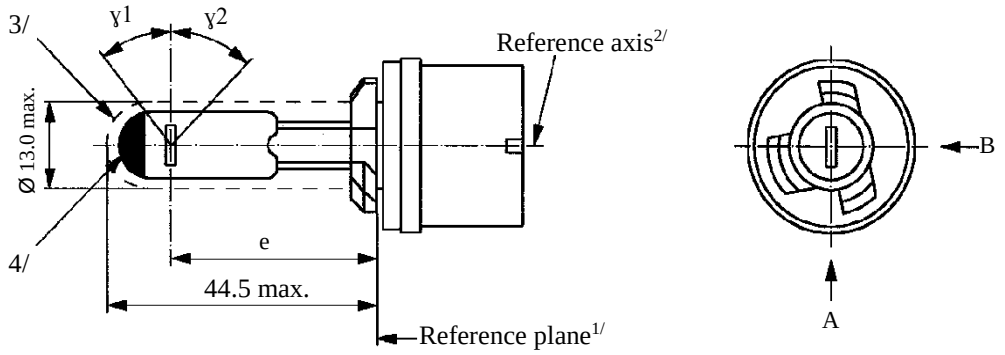

Category H27W/1

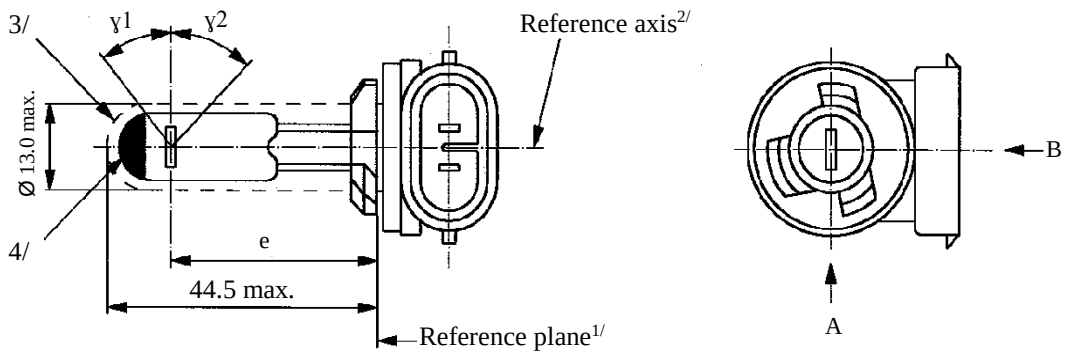

Category H27W/2

1/ The reference plane is defined by the plane formed by the underside of the bevelled lead-in flange of the cap.

2/ The reference axis is perpendicular to the reference plane and passes through the centre of the 13.10 mm cap diameter.

3/ Glass bulb and supports shall not exceed the size of a theoretical cylinder centred on the reference axis.

4/ The obscuration shall extend over the whole bulb top including the bulb cylindrical portion up to the intersection with γ1.

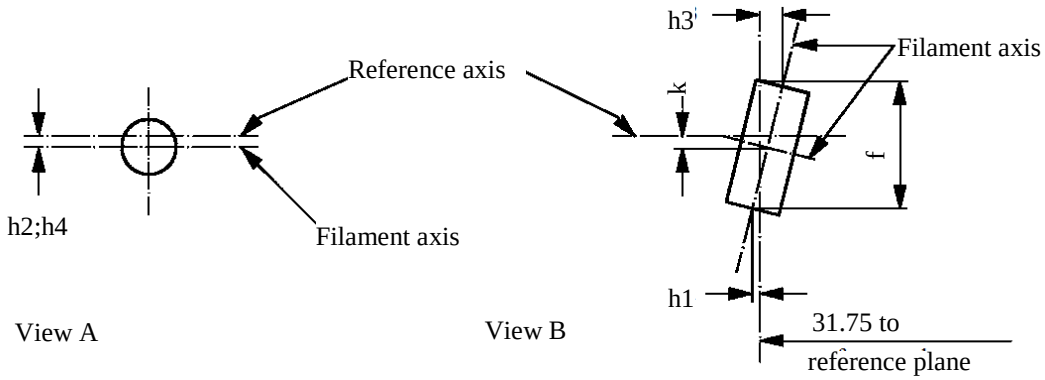

Filament dimensions and position

(Dimensions f for all filament light sources)
(Dimensions h1, h2, h3, h4 and k for standard filament light sources only)

Dimensions in mm		*Filament light source of normal production*	*Standard filament light source*
e		31.75 [6/]	31.75 ± 0.25
f [8/]		4.8 max.	4.2 ± 0.20
k		0 [6/]	0.0 ± 0.25
h1, h2, h3, h4 [7/]		0 [6/]	0.0 ± 0.25
γ1 [5/]		38° nom.	38° nom.
γ2 [5/]		44° nom.	44° nom.
Cap:	H27W/1: PG13 H27W/2: PGJ13	in accordance with IEC Publication 60061 (sheet 7004-107-4)	
Electrical and photometric characteristics			
Rated values	Volts	12	12
	Watts	27	27
Test voltage	Volts	13.5	13.5
Objective values	Watts	31 max.	31 max.
	Luminous flux	477 ± 15 %	
Reference luminous flux at approximately		12 V	350 lm
		13.2 V	450 lm
		13.5 V	477 lm

5/ Glass bulb shall be optically distortion free within the angles γ1 and γ2. This requirement applies to the whole bulb circumference within the angles γ1 and γ2.

6/ To be checked by means of a "Box system", sheet H27W/3.

7/ For standard filament light sources, the points to be measured are those where the projection of the outside of the end turns crosses the filament axis.

8/ The ends of the filament are defined by the intersections of the outside of the first and of the last light emitting turn, respectively, with the plane parallel to and 31.75 mm from the reference plane.

Screen projection requirements

This test is used to determine, by checking whether the filament is correctly positioned relative to the reference axis and reference plane, whether a filament light source complies with the requirements.

Dimensions in mm

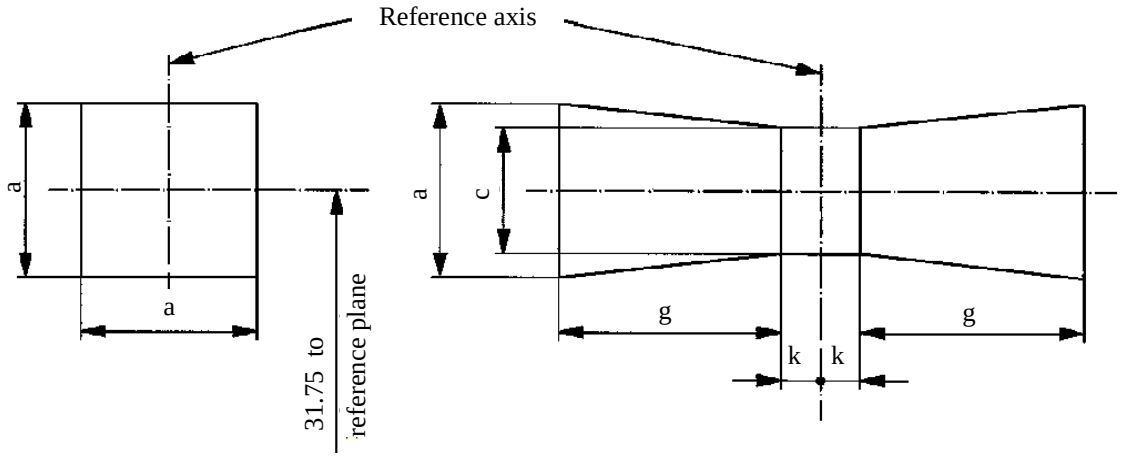

Reference	*a*	*c*	*k*	*g*
Dimensions	d + 1.2	d + 1.0	0.5	2.4

d = actual diameter of filament

The filament shall lie entirely within the limits shown.

The centre of the filament shall lie within the limits of dimension k.

The drawings are intended only to illustrate the essential dimensions (in mm) of the filament light source.

Category HB3

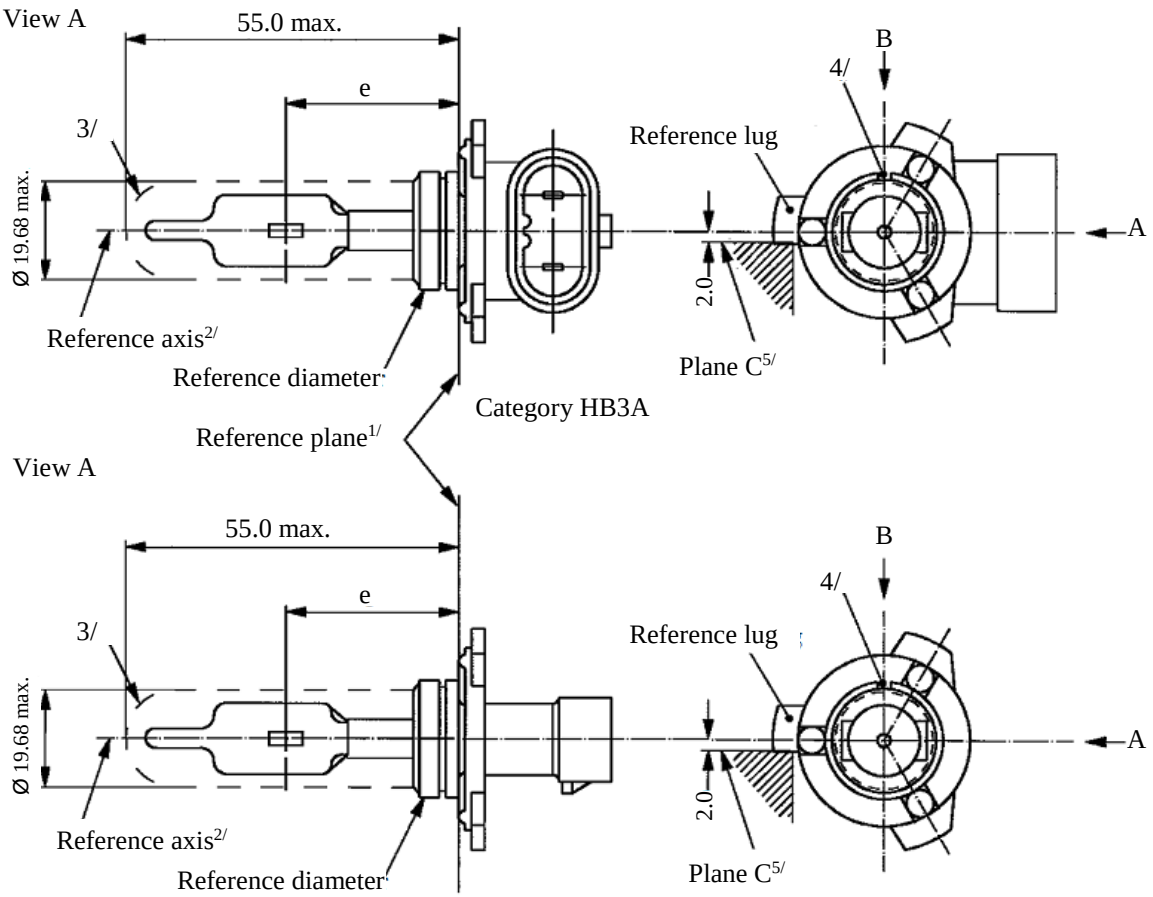

1/ The reference plane is the plane defined by the meeting points of cap-holder fit.

2/ The reference axis is perpendicular to the reference plane and concentric with the reference diameter of the cap.

3/ Glass bulb and supports shall not exceed the envelope and shall not interfere with insertion past the filament light source key.

4/ The keyway is mandatory for category HB3A and optional for category HB3.

5/ The filament light source shall be rotated in the measuring holder until the reference lug contacts plane C of the holder.

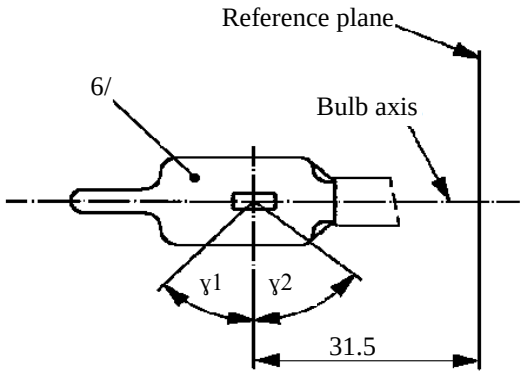

Distortion free area[7/]

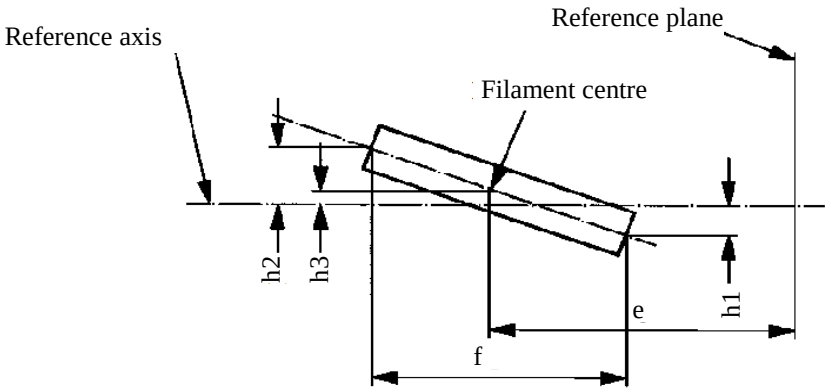

Filament position and dimensions

6/ The colour of the light emitted shall be white or selective-yellow.

7/ Glass bulb periphery shall be optically distortion-free axially within the angles γ1 and γ2. This requirement applies to the whole bulb circumference within the angles γ1 and γ2.

Dimensions in mm [12/]		*Tolerance*	
		Filament light sources of normal production	*Standard filament light source*
e [9/, 11/]	31.5	[10/]	±0.16
f [9/, 11/]	5.1	[10/]	±0.16
h1, h2	0	[10/]	±0.15 [8/]
h3	0	[10/]	±0.08 [8/]
γ1	45° min.	-	-
γ2	52° min.	-	-
Cap P20d in accordance with IEC Publication 60061 (sheet 7004-31-2) [13/]			
Electrical and photometric characteristics			
Rated values	Volts	12	12
	Watts	60	60
Test voltage	Volts	13.2	13.2
Objective values	Watts	73 max.	73 max.
	Luminous flux	1,860 ± 12 %	
Reference luminous flux at approximately		12 V	1,300
		13.2 V	1,860

[8/] The eccentricity is measured only in viewing directions* A and B as shown in the figure on sheet HB3/1. The points to be measured are those where the projection of the outside of the end turns nearest to or furthest from the reference plane crosses the filament axis.

[9/] The viewing direction is direction* B as shown in the figure on sheet HB3/1.

[10/] To be checked by means of a "Box system"; sheet HB3/4*.

[11/] The ends of the filament are defined as the points where, when the viewing direction* as defined in footnote 9/ above, the projection of the outside of the end turns crosses the filament axis.

[12/] Dimensions shall be checked with O-ring removed.

[13/] Filament light source HB3 shall be equipped with the right-angle cap and filament light source HB3A with the straight cap.

* Manufacturers may choose another set of perpendicular viewing directions. The viewing directions specified by the manufacturer are to be used by the testing laboratory when checking filament dimensions and position.

Screen projection requirements

This test is used to determine, by checking whether the filament is correctly positioned relative to the reference axis and reference plane, whether a filament light source complies with the requirements.

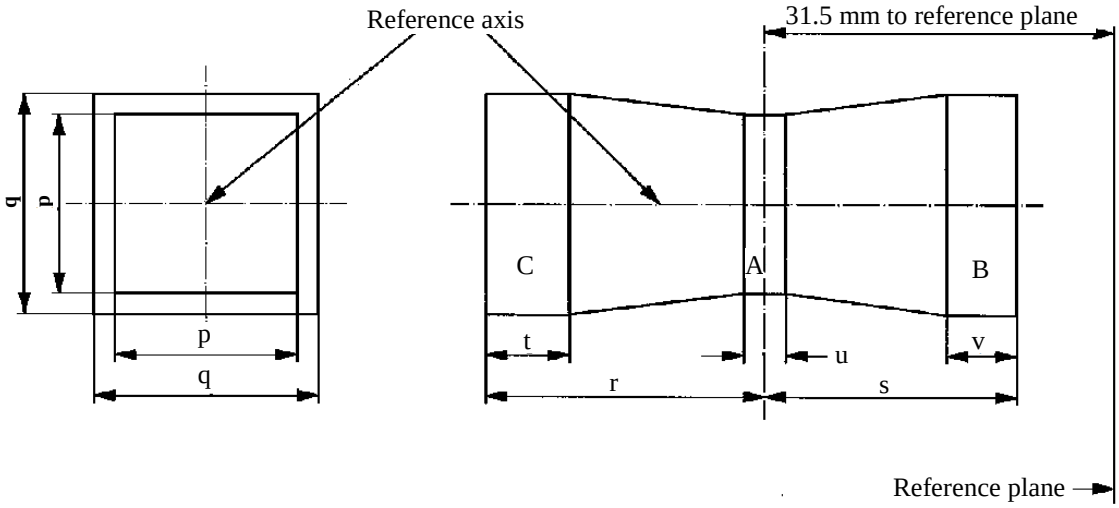

	p	*q*	*r*	*s*	*t*	*u*	*v*
12 V	1.3 d	1.6 d	3.0	2.9	0.9	0.4	0.7

d = diameter of filament

The filament position is checked solely in directions A and B as shown on sheet HB3/1.

The filament shall lie entirely within the limits shown.

The beginning of the filament, as defined on sheet HB3/3, footnote 11/, shall lie in volume "B" and the end of the filament in volume "C".

Volume "A" does not involve any filament centre requirement.

The drawings are intended only to illustrate the essential dimensions (in mm) of the filament light source.

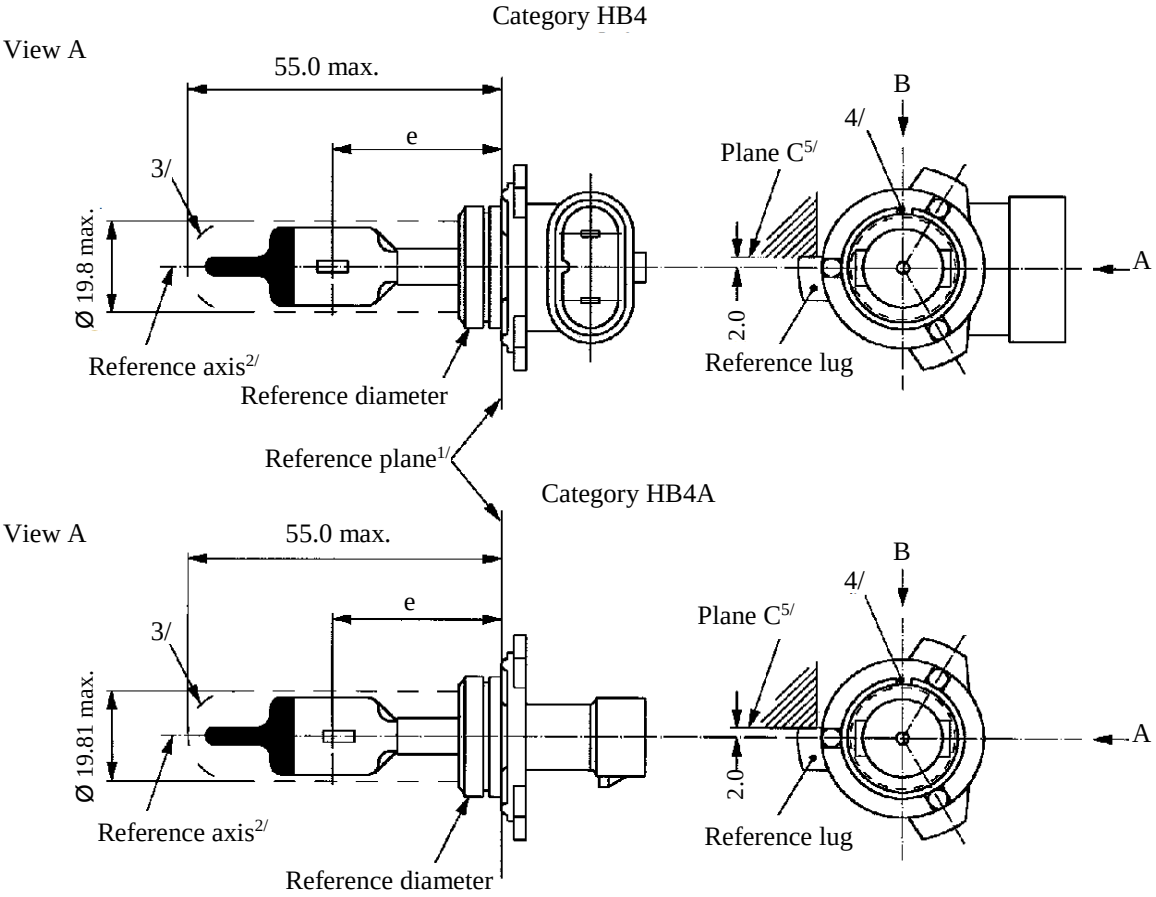

1/ The reference plane is the plane defined by the meeting points of cap-holder fit.

2/ The reference axis is perpendicular to the reference plane and concentric with the reference diameter of the cap.

3/ Glass bulb and supports shall not exceed the envelope and shall not interfere with insertion past the filament light source key. The envelope is concentric to the reference axis.

4/ The keyway is mandatory for category HB4A and optional for category HB4.

5/ The filament shall be rotated in the measuring holder until the reference lug contacts plane C of the holder.

Categories HB4 and HB4A **Sheet HB4/2**

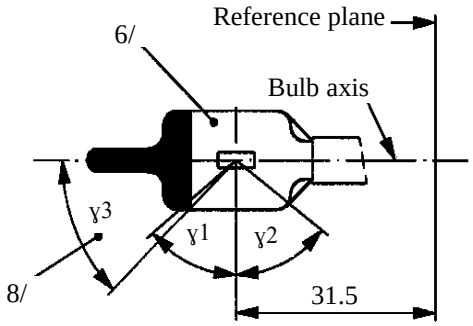

Distortion free area[7/] and black top[8/]

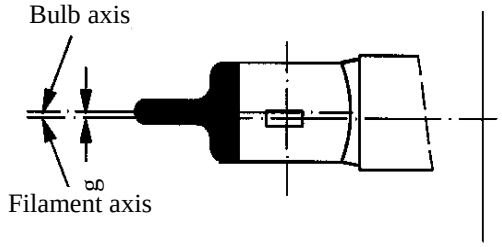

Bulb eccentricity

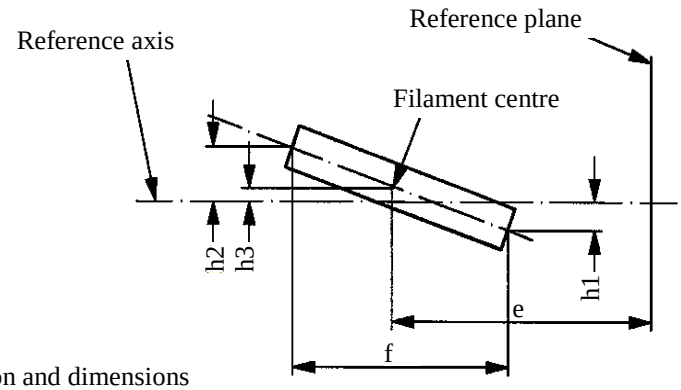

Filament position and dimensions

6/ The colour of the light emitted shall be white or selective-yellow.

7/ Glass bulb periphery shall be optically distortion-free axially and cylindrically within the angles γ1 and γ2. This requirement applies to the whole bulb circumference within the angles γ1 and γ2 and does not need to be verified in the area covered by the obscuration.

8/ The obscuration shall extend to at least angle γ3 and shall be at least as far as the undistorted part of the bulb defined by angle γ1.

Dimensions in mm [13/]		*Tolerance*	
		Filament light sources of normal production	*Standard filament light source*
e [10/, 12/]	31.5	[11/]	±0.16
f [10/, 12/]	5.1	[11/]	±0.16
h1, h2	0	[11/]	±0.15 [9/]
h3	0	[11/]	±0.08 [9/]
g [10/]	0.75	±0.5	±0.3
γ1	50° min.	-	-
γ2	52° min.	-	-
γ3	45°	±5°	±5°
Cap P22d in accordance with IEC Publication 60061 (sheet 7004-32-2) [14/]			
Electrical and photometric characteristics			
Rated values	Volts	12	12
	Watts	51	51
Test voltage	Volts	13.2	13.2
Objective values	Watts	62 max.	62 max.
	Luminous flux	1,095 ± 15 %	
Reference luminous flux at approximately		12 V	825
		13.2 V	1,095

[9/] The eccentricity is measured only in viewing directions* A and B as shown in the figure on sheet HB4/1. The points to be measured are those where the projection of the outside of the end turns nearest to or furthest from the reference plane crosses the filament axis.

[10/] The viewing direction is direction* B as shown in the figure on sheet HB4/1.

[11/] To be checked by means of a "Box system"; sheet HB4/4*.

[12/] The ends of the filament are defined as the points where, when the viewing direction* as defined in footnote 10/ above, the projection of the outside of the end turns crosses the filament axis.

[13/] Dimensions shall be checked with O-ring removed.

[14/] Filament light source HB4 shall be equipped with the right-angle cap and filament light source HB4A with the straight cap.

* Manufacturers may choose another set of perpendicular viewing directions. The viewing directions specified by the manufacturer are to be used by the testing laboratory when checking filament dimensions and position.

Screen projection requirements

This test is used to determine, by checking whether the filament is correctly positioned relative to the reference axis and reference plane, whether a filament light source complies with the requirements.

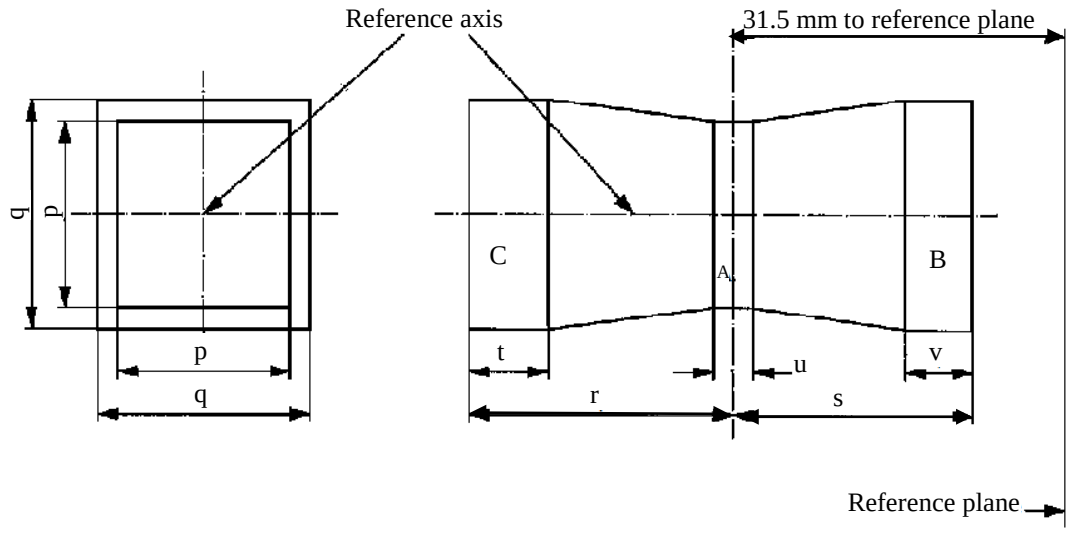

	p	*q*	*r*	*s*	*t*	*u*	*v*
12 V	1.3 d	1.6 d	3.0	2.9	0.9	0.4	0.7

d = diameter of filament

The filament position is checked solely in directions A and B as shown on sheet HB4/1.

The filament shall lie entirely within the limits shown.

The beginning of the filament as defined on sheet HB4/3 footnote 12/ shall lie in volume "B" and the end of the filament in volume "C".

Volume "A" does not involve any filament centre requirement.

The drawings are intended only to illustrate the essential dimensions (in mm) of the filament light source.

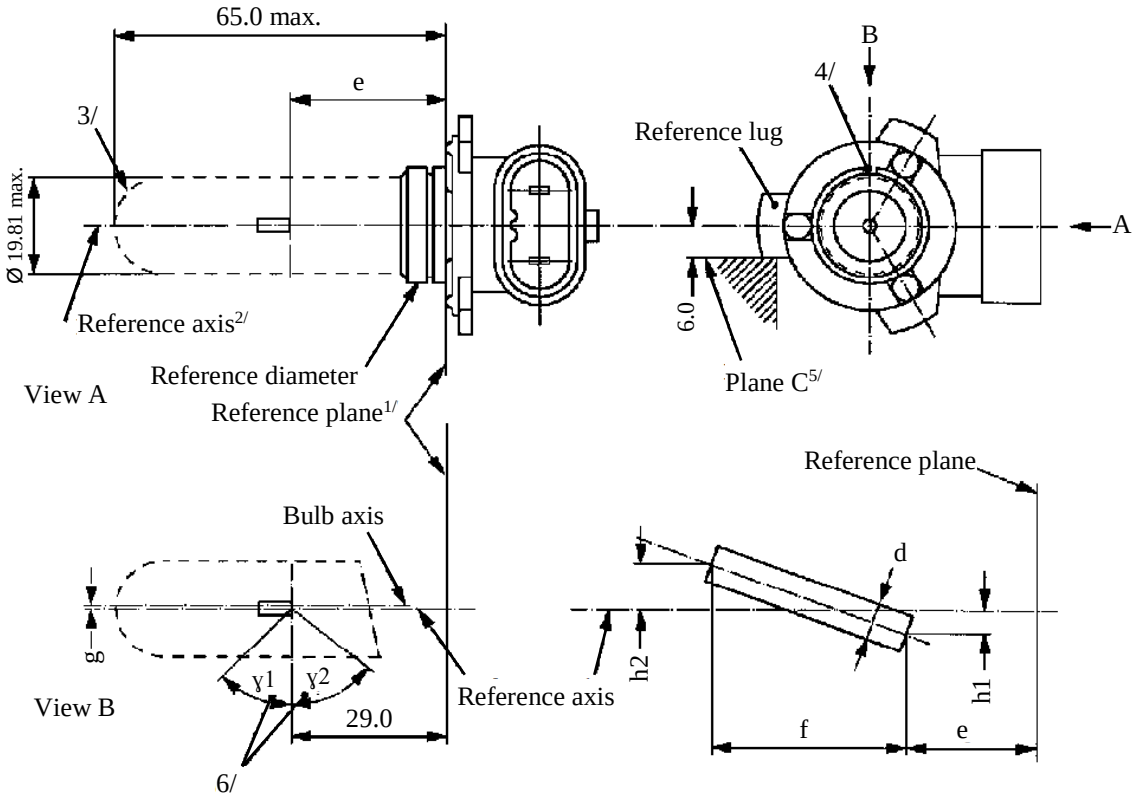

1/ The reference plane is the plane defined by the three supporting bosses on the cap flange.

2/ The reference axis is perpendicular to the reference plane and concentric with the reference diameter of the cap.

3/ Glass bulb and supports shall not exceed the envelope. The envelop is concentric to the reference axis.

4/ The keyway is mandatory.

5/ The filament shall be rotated in the measuring holder until the reference lug contacts plane C of the holder.

6/ Glass bulb periphery shall be optically distortion-free axially within the angles γ1 and γ2. This requirement applies to the whole bulb circumference within the angles γ1 and γ2.

Category HIR1 **Sheet HIR1/2**

Dimensions in mm [11/]		*Tolerance*	
		Filament light sources of normal production	*Standard filament light source*
e [8/, 10/]	29	[9/]	±0.16
f [8/, 10/]	5.1	[9/]	±0.16
g [8/]	0	+0.7 / -0.0	+0.4 / -0.0
h1, h2	0	[9/]	±0.15 [7/]
d	1.6 max.		
γ1	50° min.	-	-
γ2	50° min.	-	-
Cap PX20d in accordance with IEC Publication 60061 (sheet 7004-31-2)			
Electrical and photometric characteristics			
Rated values	Volts	12	12
	Watts	65	65
Test voltage	Volts	13.2	13.2
Objective values	Watts	73 max.	73 max.
	Luminous flux	2,500 ± 15 %	
Reference luminous flux at approximately		12 V	1,840
		13.2 V	2,500

[7/] The eccentricity is measured only in viewing directions A and B as shown in the figure on sheet HIR1/1. The points to be measured are those where the projection of the outside of the end turns nearest to or furthest from the reference plane crosses the filament axis.

[8/] The viewing direction is direction B as shown in the figure on sheet HIR1/1.

[9/] To be checked by means of a "Box system"; sheet HIR1/3.

[10/] The ends of the filament are defined as the points where, when the viewing direction as defined in footnote 8/ above, the projection of the outside of the end turns crosses the filament axis.

[11/] Dimensions shall be checked with O-ring mounted.

Screen projection requirements

This test is used to determine, by checking whether the filament is correctly positioned relative to the reference axis and reference plane, whether a filament light source complies with the requirements.

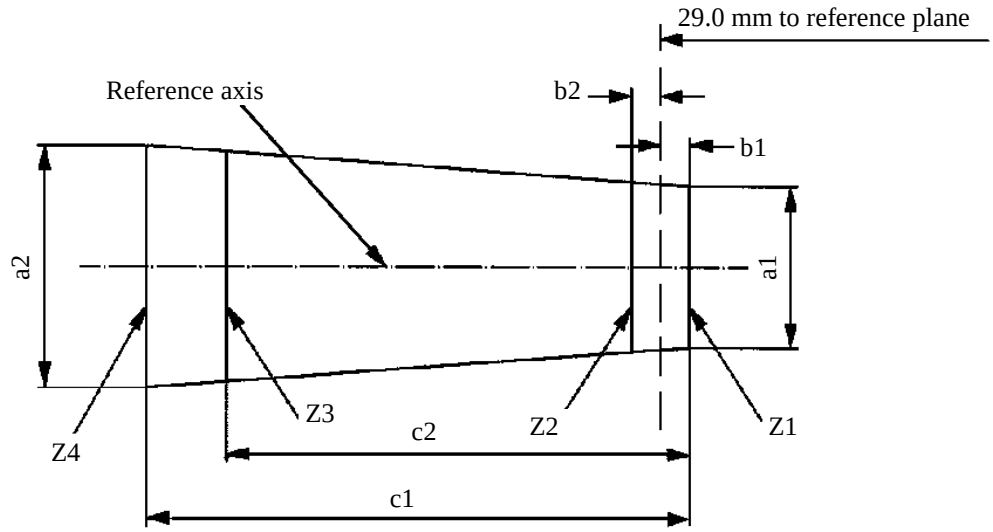

	a1	*a2*	*b1*	*b2*	*c1*	*c2*
12 V	d + 0.4	d + 0.8	0.35		6.1	5.2

d = diameter of filament

The filament position is checked solely in directions A and B as shown on sheet HIR1/1.

The ends of the filament as defined on sheet HIR1/2 footnote 10/ shall lie between lines Z1 and Z2 and between lines Z3 and Z4.

Category HIR2 **Sheet HIR2/1**

The drawings are intended only to illustrate the essential dimensions (in mm) of the filament light source.

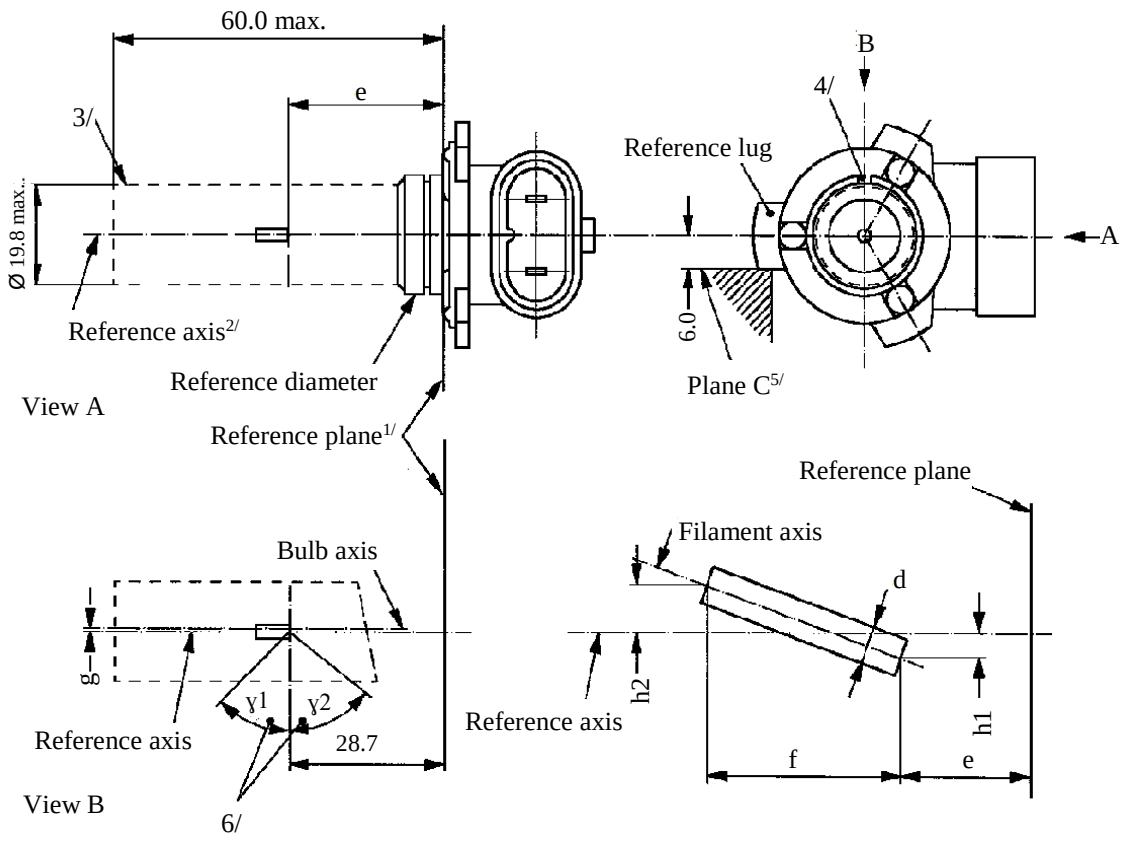

1/ The reference plane is the plane defined by the three meeting points of the cap holder fit.

2/ The reference axis is perpendicular to the reference plane and passes through the centre of the reference diameter of the cap.

3/ Glass bulb and supports shall not exceed the envelope. The envelop is concentric to the reference axis.

4/ The keyway is mandatory.

5/ The filament light source shall be rotated in the measuring holder until the reference lug contacts plane C of the holder.

6/ Glass bulb periphery shall be optically distortion-free axially within the angles γ1 and γ2. This requirement applies to the whole bulb circumference within the angles γ1 and γ2.

Dimensions in mm [11/]		*Tolerance*	
		Filament light sources of normal production	*Standard filament light source*
e [8/, 10/]	28.7	[9/]	±0.16
f [8/, 10/]	5.3	[9/]	±0.16
g [8/]	0	+0.7 / -0.0	+0.4 / -0.0
h1, h2	0	[9/]	±0.15 [7/]
d	1.6 max.	-	-
γ1	50° min.	-	-
γ2	50° min.	-	-
Cap PX22d in accordance with IEC Publication 60061 (sheet 7004-32-2)			
Electrical and photometric characteristics			
Rated values	Volts	12	12
	Watts	55	55
Test voltage	Volts	13.2	13.2
Objective values	Watts	63 max.	63 max.
	Luminous flux	1,875 ± 15 %	
Reference luminous flux at approximately		12 V	1,355
		13.2 V	1,875

[7/] The eccentricity is measured only in viewing directions A and B as shown in the figure on sheet HIR2/1. The points to be measured are those where the projection of the outside of the end turns nearest to or furthest from the reference plane crosses the filament axis.

[8/] The viewing direction is direction B as shown in the figure on sheet HIR2/1.

[9/] To be checked by means of a "Box system"; sheet HIR2/3.

[10/] The ends of the filament are defined as the points where, when the viewing direction as defined in footnote 8/ above, the projection of the outside of the end turns crosses the filament axis.

[11/] Dimensions shall be checked with O-ring removed.

Category HIR2 **Sheet HIR2/3**

Screen projection requirements

This test is used to determine, by checking whether the filament is correctly positioned relative to the reference axis and reference plane, whether a filament light source complies with the requirements.

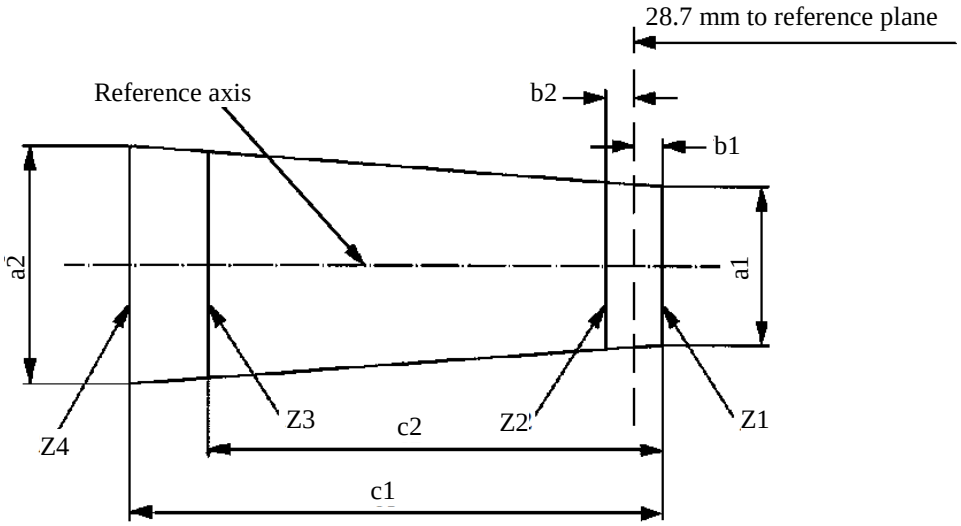

	a1	*a2*	*b1*	*b2*	*c1*	*c2*
12 V	d + 0.4	d + 0.8	0.35		6.6	5.7

d = diameter of filament

The filament position is checked solely in directions A and B as shown on sheet HIR2/1.

The ends of the filament as defined on sheet HIR2/2 footnote 10/ shall lie between lines Z1 and Z2 and between lines Z3 and Z4.

The drawings are intended only to illustrate the essential dimensions (in mm) of the filament light source.

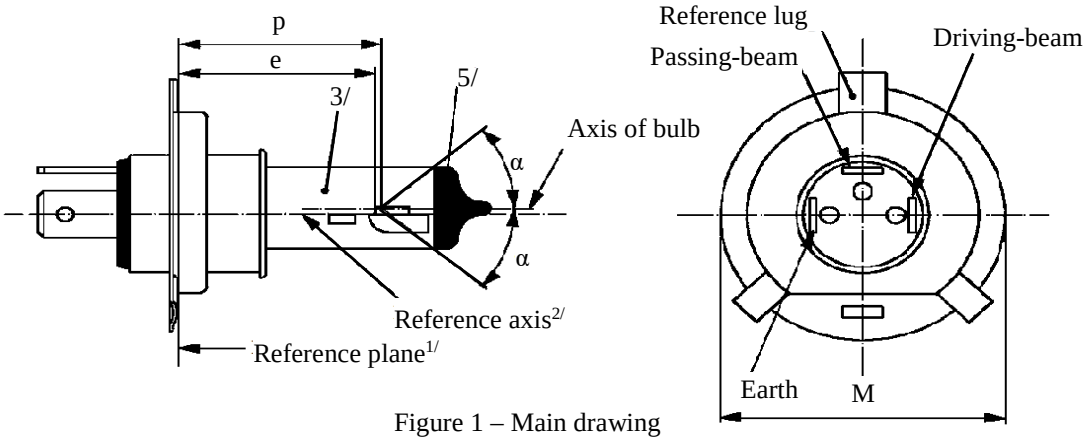

Figure 1 – Main drawing

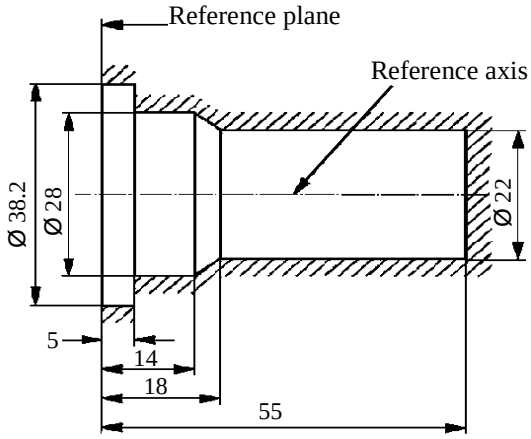

Figure 2

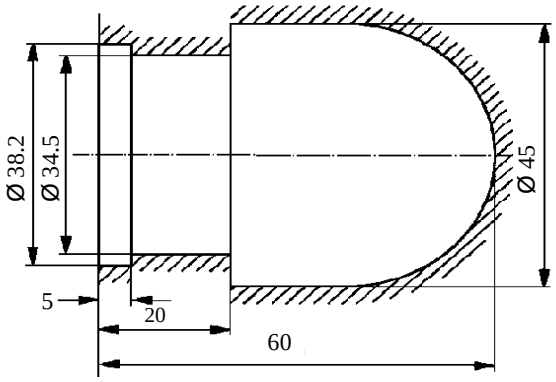

Figure 3

Maximum filament light source outlines4/

1/ The reference plane is the plane formed by the seating points of the three lugs of the cap ring.

2/ The reference axis is perpendicular to the reference plane and passes through the centre of the circle of diameter "M".

3/ The colour of the light emitted shall be white or selective-yellow.

4/ The bulb and supports shall not exceed the envelope as in Figure 2. However, where a selective-yellow outer bulb is used the bulb and supports shall not exceed the envelope as in Figure 3.

5/ The obscuration shall extend at least as far as the cylindrical part of the bulb. It shall also overlap the internal shield when the latter is viewed in a direction perpendicular to the reference axis.

Category HS1 **Sheet HS1/2**

Dimensions in mm		*Filament light sources of normal production*				*Standard filament light source*	
		6 V		*12 V*		*12 V*	
e		28.5 + 0.45 / -0.25				28.5 + 0.20 / -0.00	
p		28.95				28.95	
α		max. 40°				max. 40°	
Cap PX43t in accordance with IEC Publication 60061 (sheet 7004-34-2)							
Electrical and photometric characteristics							
Rated values	Volts	6 [6/]		12 [6/]		12 [6/]	
	Watts	35	35	35	35	35	35
Test voltage	Volts	6.3		13.2		13.2	
Objective values	Watts	35	35	35	35	35	35
	± %	5				5	
	Luminous flux	700	440	825	525		
	± %	15					
Measuring flux [7/] lm		-		-	450		
Reference luminous flux at approximately				12 V		700	450
				13.2 V		825	525

[6/] The values indicated in the left hand column relate to the driving-beam. Those indicated in the right-hand column relate to the passing-beam.

[7/] Measuring luminous flux according to the provisions for filament light sources with an internal shield to produce the cut-off.

Position of shield

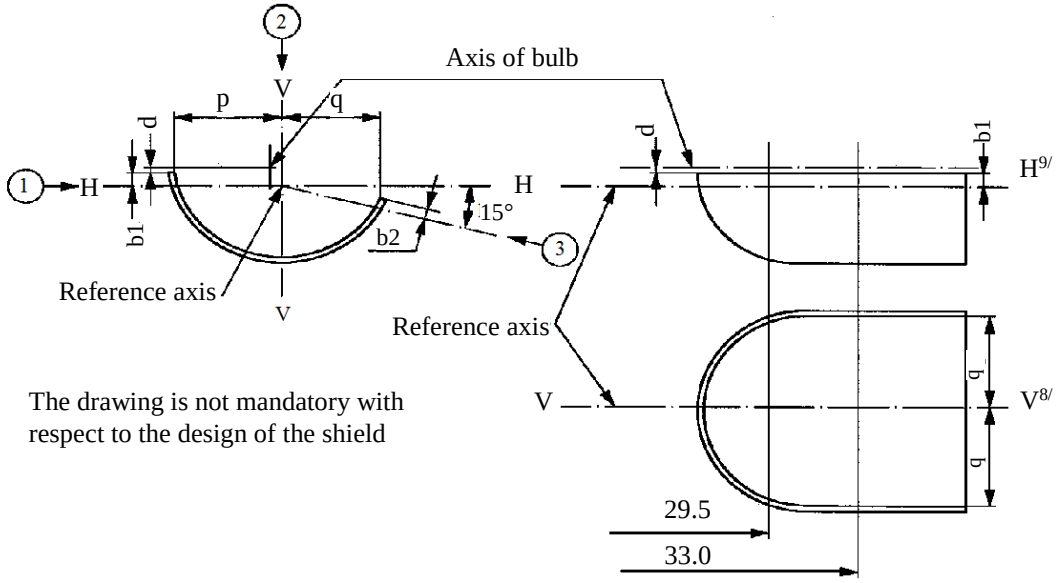

The drawing is not mandatory with respect to the design of the shield

Position of filaments

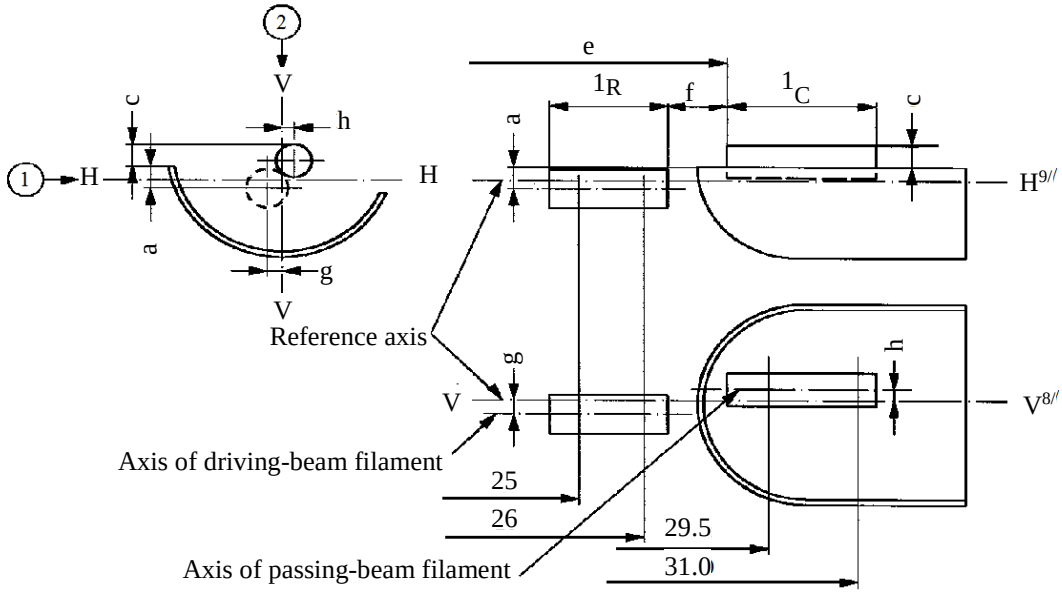

Category HS1 **Sheet HS1/4**

Table of the dimensions (in mm) referred to in the drawings on sheet HS1/3

*Reference**		*Dimensions***		*Tolerance*		
				Filament light sources of normal production		*Standard filament light source*
6 V	*12 V*	*6 V*	*12 V*	*6 V*	*12 V*	*12 V*
a/26		0.8		±0.35		±0.20
a/25		0.8		±0.55		±0.20
b1/29.5		0		±0.35		±0.20
b1/33		b1/29.5 mv		±0.35		±0.15
b2/29.5		0		±0.35		±0.20
b2/33		b2/29.5 mv		±0.35		±0.15
c/29.5		0.6		±0.35		±0.20
c/31		c/29.5 mv		±0.30		±0.15
d		min. 0.1 / max. 1.5		-		-
e [13/]		28.5		+0.45 / -0.25		+0.20 / -0.00
f [11/, 12/, 13/]		1.7		+0.50 / -0.30		+0.30 / -0.10
g/26		0		±0.50		±0.30
g/25		0		±0.70		±0.30
h/29.5		0		±0.50		±0.30
h/31		h/29.5 mv		±0.30		±0.20
l_R [11/, 14/]		3.5	4.0	±0.80		±0.40
l_C [11/, 12/]		3.3	4.5	±0.80		±0.35
p/33		Depends on the shape of the shield		-		-
q/33		(p+q)/2		±0.60		±0.30

* "../26" means dimension to be measured at the distance from the reference plane indicated in mm after the stroke.
** "29.5 mv" means the value measured at a distance of 29.5 mm from the reference plane.

8/ Plane V-V is the plane perpendicular to the reference plane and passing through the reference axis and through the intersection of the circle of diameter "M" with the axis of the reference lug.

9/ Plane H-H is the plane perpendicular to both the reference plane and plane V-V and passing through the reference axis.

10/ (Blank).

11/ The end turns of the filament are defined as being the first luminous turn and the last luminous turn that are at substantially the correct helix angle. For coiled-coil filaments, the turns are defined by the envelope of the primary coil.

12/ For the passing-beam filament, the points to be measured are the intersections, seen in direction 1, of the lateral edge of the shield with the outside of the end turns defined under footnote 11/.

13/ "e" denotes the distance from the reference plane to the beginning of the passing-beam filament as defined above.

14/ For the driving-beam filament the points to be measured are the intersections, seen in direction 1, of a plane, parallel to plane H-H and situated at a distance of 0.8 mm below it, with the end turns defined under footnote 11/.

Additional explanations to sheet HS1/3

The dimensions below are measured in three directions:

1. For dimensions a, b1, c, d, e, f, I_R and I_C;
2. For dimensions g, h, p and q;
3. For dimension b2.

Dimensions p and q are measured in planes parallel to and 33 mm away from the reference plane.

Dimensions b1 and b2 are measured in planes parallel to and 29.5 mm and 33 mm away from the reference plane.

Dimensions a and g are measured in planes parallel to and 25.0 mm and 26.0 mm away from the reference plane.

Dimensions c and h are measured in planes parallel to and 29.5 mm and 31 mm away from the reference plane.

Note: For the method of measurement, see Appendix E of IEC Publication 60809.

Category HS2 **Sheet HS2/1**

The drawings are intended only to illustrate the essential dimensions (in mm) of the filament light source.

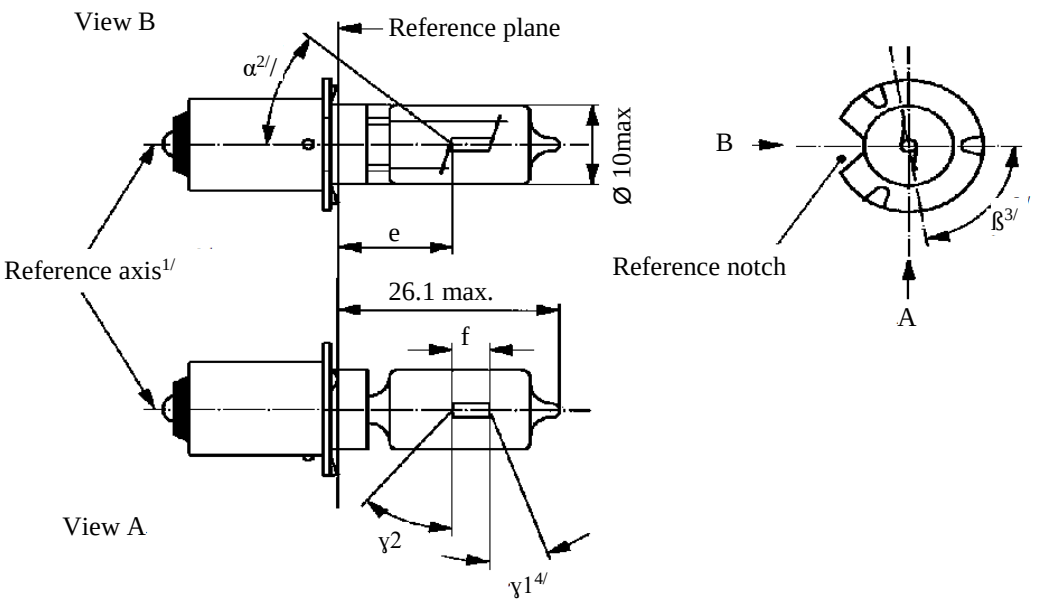

Filament position

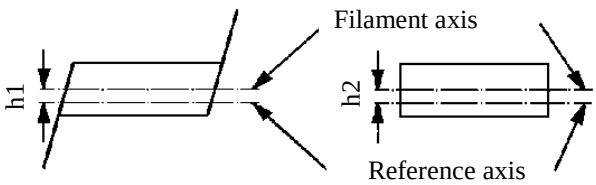

View B View A

1/ The reference axis is perpendicular to the reference plane and passes through the intersection of this plane with the axis of the cap ring.

2/ All parts which may obscure the light or may influence the light beam shall lie within angle α.

3/ Angle β denotes the position of the plane through the inner leads with reference to the reference notch.

4/ In the area between the outer legs of the angles γ1 and γ2, the bulb shall have no optically distorting areas and the curvature of the bulb shall have a radius not less than 50 per cent of the actual bulb diameter.

Dimensions in mm		*Filament light sources of normal production*			*Standard filament light source*
		Min.	*Nom.*	*Max.*	
e			11.0 [5/]		11.0 ± 0.15
f [6/]	6 V	1.5	2.5	3.0	2.5 ± 0.15
	12 V	2.0	3.0	4.0	
h1, h2			[5/]		0 ± 0.15
α [2/]				40°	
β [3/]		75°	90°	105°	90° ± 5°
γ1 [4/]		15°			15° min.
γ2 [4/]		40°			40° min.
Cap PX13.5s in accordance with IEC Publication 60061 (sheet 7004-35-2)					
Electrical and photometric characteristics					
Rated values	Volts	6	12		6
	Watts	15			15
Test voltage	Volts	6.75	13.5		6.75
Objective values	Watts	15 ± 6 %			15 ± 6 %
	Luminous flux	320 ± 15 %			
Reference luminous flux: 320 lm at approximately 6.75 V					

[5/] To be checked by means of the "Box system", sheet HS2/3.

[6/] In order to avoid rapid filament failure, the supply voltage shall not exceed 8.5 V for 6 V filament light sources and
15 V for 12 V types.

Screen projection requirements

This test is used to determine, by checking whether the filament light source complies with the requirements by checking whether the filament light source is correctly positioned relative to the reference axis and reference plane.

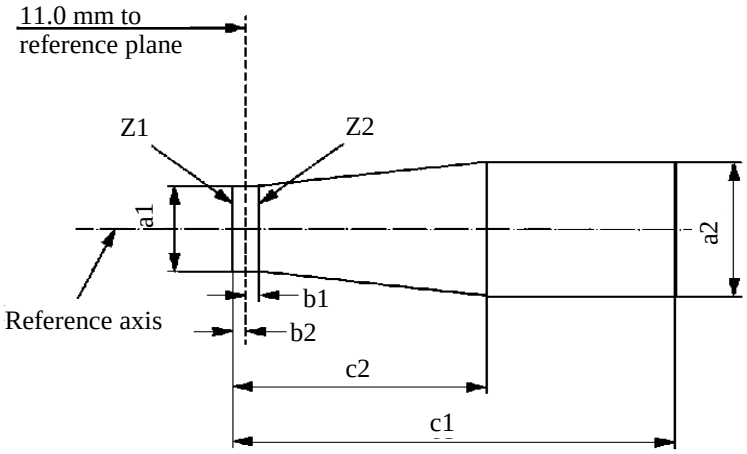

Reference	*a1*	*a2*	*b1*	*b2*	*c1 (6 V)*	*c1 (12 V)*	*c2*
Dimension	d + 1.0	d + 1.4	0.25	0.25	4.0	4.5	1.75

d= actual filament diameter

The filament shall lie entirely within the limits shown.

The beginning of the filament shall lie between the lines Z1 and Z2.

The drawings are intended only to illustrate the essential dimensions (in mm) of the filament light source.

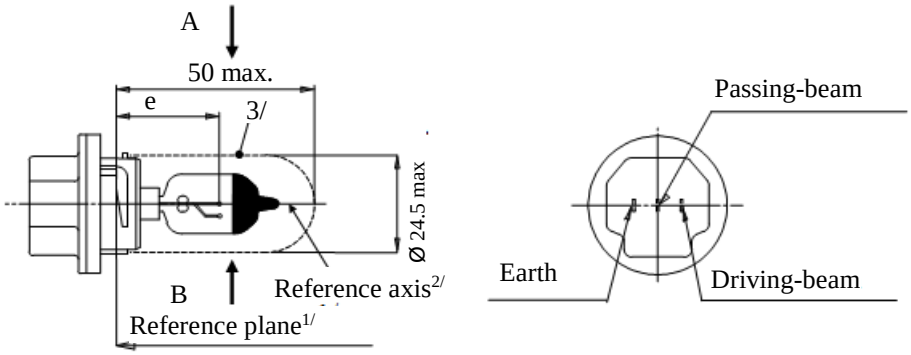

Figure 1 – Main drawing

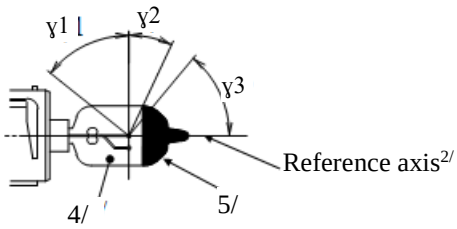

Figure 2 - Distortion free area4/ and black top5/

1/ The reference plane is defined by the three ramp inside surface.

2/ The reference axis is perpendicular to the reference plane and passing through the centre of the 23 mm cap diameter.

3/ Glass bulb and supports shall not exceed the envelope as indicated in Figure 1. The envelope is concentric to the reference axis.

4/ Glass bulb shall be optically distortion free within the angles γ1 and γ2. This requirement applies to the whole bulb circumference within the angles γ1 and γ2.

5/ The obscuration shall extend at least to angle γ3 and shall extend at least to the cylindrical part of the bulb on the whole top circumference.

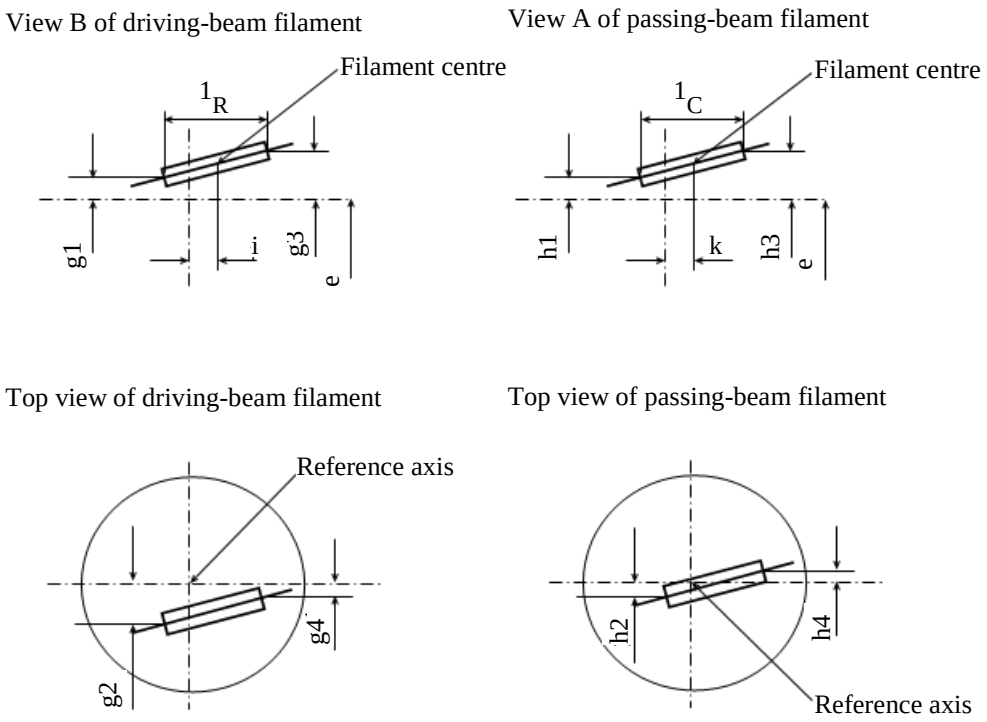

Figure 3 – Filament position and dimensions

Dimensions in mm		*Filament light sources of normal production*	*Standard filament light source*
		12 V	*12 V*
e	26	6/	±0.15
l_C 7/	4.6		±0.3
k	0		±0.2
h1, h3	0		±0.15
h2, h4	0		±0.20
l_R 7/	4.6		±0.3
j	0		±0.2
g1, g3	0		±0.30
g2, g4	2.5		±0.40
γ1	50° min.	-	-
γ2	23° min.	-	-
γ3	50° min.	-	-
Cap P23t in accordance with IEC Publication 60061 (sheet 7004-138-2)			
Electrical and photometric characteristcs			

Rated values	Voltage	V	12		12	
	Wattage	W	35	30	35	30
Test voltage		V	13.2		13.2	
Objective values	Wattage	W	40 max.	37 max.	40 max.	37 max.
	Luminous flux	lm	620	515		
		± %	15	15		
Reference luminous at approximately				12 V	460	380
				13.2 V	620	515

6/ To be checked by means of a "Box system". Sheet HS5/4.

7/ The positions of the first and the last turn of the filament are defined by the intersections of the outside of the first and the outside of the last light-emitting turn, respectively, with the plane parallel to and 26 mm distant from the reference plane.

Category HS5 **Sheet HS5/4**

Screen projection requirement

This test is used to determine whether a filament light source complies with the requirements by checking whether:

(a) The passing-beam filament is correctly positioned relative to the reference axis and the reference plane; and whether

(b) The driving-beam filament is correctly positioned relative to the passing-beam filament.

Side elevation

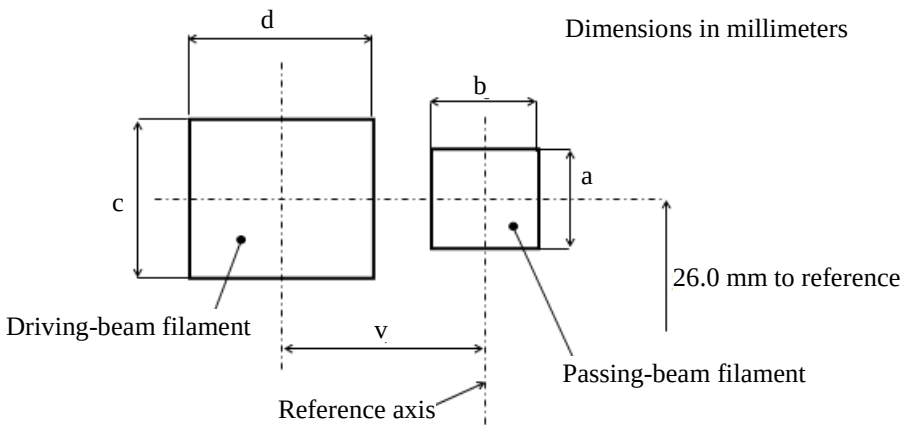

Reference	*a*	*b*	*c*	*d*	*v*
Dimensions	d1+0.6	d1+0.8	d2+1.2	d2+1.6	2.5

d1: Diameter of the passing-beam filament
d2: Diameter of the driving-beam filament

Front elevation

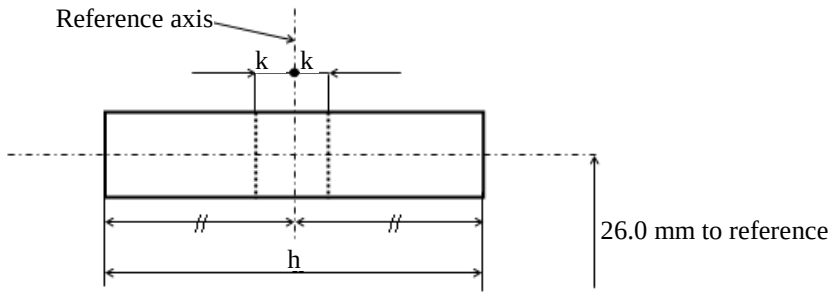

Reference	*h*	*k*
Dimensions	6.0	0.5

The filaments shall lie entirely within the limits shown.

The centre of the filament shall lie within the limits of dimension k.

The drawings are intended only to illustrate the essential dimensions (in mm) of the filament light source.

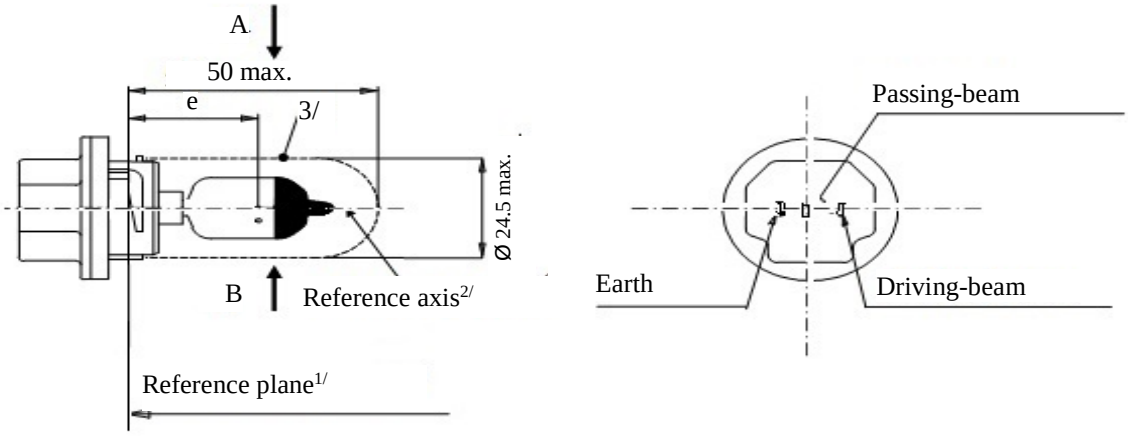

Figure 1 – Main drawing

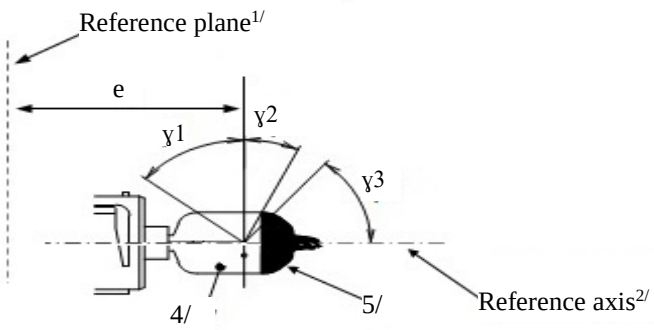

Figure 2 - Distortion free area4/ and black top5/

1/ The reference plane is defined by three ramps inside surface.

2/ The reference axis is perpendicular to the reference plane and passing through the centre of the 23 mm cap diameter.

3/ Glass bulb and supports shall not exceed the envelope as indicated in Figure 1. The envelope is concentric to the reference axis.

4/ Glass bulb shall be optically distortion free within the angles γ1 and γ2. This requirement applies to the whole bulb circumference within the angles γ1 and γ2.

5/ The obscuration shall extend at least to angle γ3 and shall extend at least to the cylindrical part of the bulb on the whole top circumference.

Category HS5A **Sheet HS5A/2**

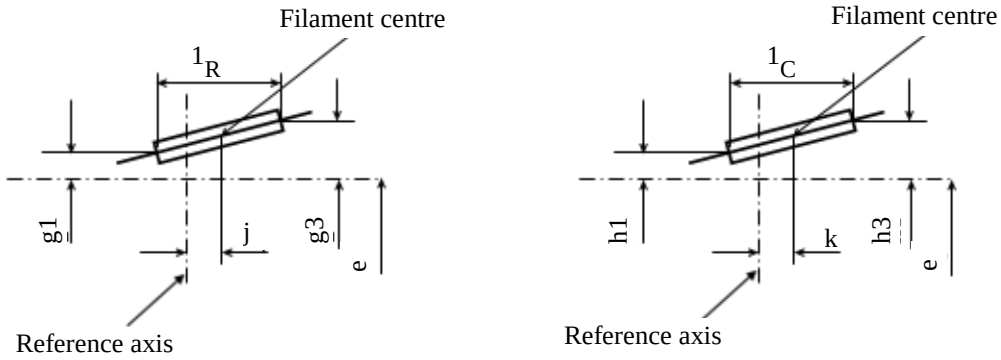

View B - Driving-beam filament

View A - Passing-beam filament

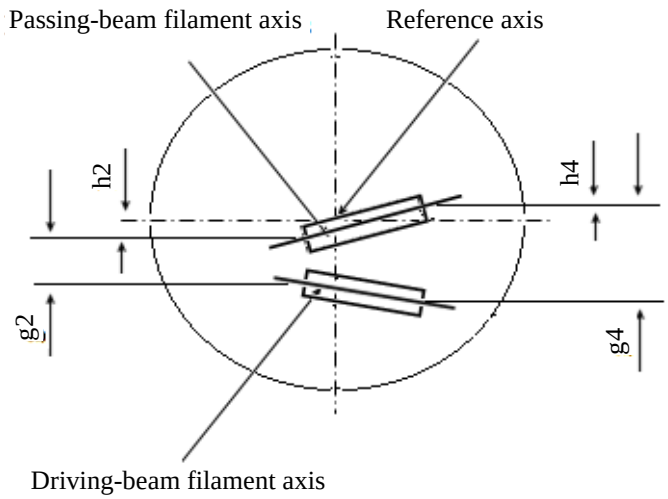

Top view of driving-beam and passing-beam filament

Figure 3 – Filament position and dimensions

Dimensions in mm		*Filament light sources of normal production*	*Standard filament light source*
		12 V	*12 V*
e	26	-	-
l_C [6/]	4.6	±0.5	±0.3
k	0	±0.4	±0.2
h1, h3	0	±0.3	±0.15
h2, h4	0	±0.4	±0.2
l_R [6/]	4.6	±0.5	±0.3
j	0	±0.6	±0.3
g1, g3	0	±0.6	±0.3
g2, g4	2.5	±0.4	±0.2
γ1	50° min.	-	-
γ2	23° min.	-	-
γ3	50° min.	-	-
Cap PX23t in accordance with IEC Publication 60061 (sheet 7004-138A-1)			
Electrical and photometric characteristics			

Rated values	Voltage	V	12 [7/]		12 [7/]	
	Wattage	W	45	40	45	40
Test voltage		V	13.2		13.2	
Objective Values	Wattage	W	50 max.	45 max.	50 max.	45 max.
	Luminous flux	lm	750	640		
		± %	15	15		
Reference luminous at approximately			12 V		550 lm	470 lm
			13.2 V		750 lm	640 lm

[6/] The positions of the first and the last turn of the filament are defined by the intersections of the outside of the first and the outside of the last light-emitting turn, respectively, with the plane parallel to and 26 mm distant from the reference plane.

[7/] The values indicated in the left-hand columns relate to the driving-beam filament and those indicated in the right-hand columns to the passing-beam filament.

Category HS6 **Sheet HS6/1**

The drawings are intended only to illustrate the essential dimensions (in mm) of the filament light source.

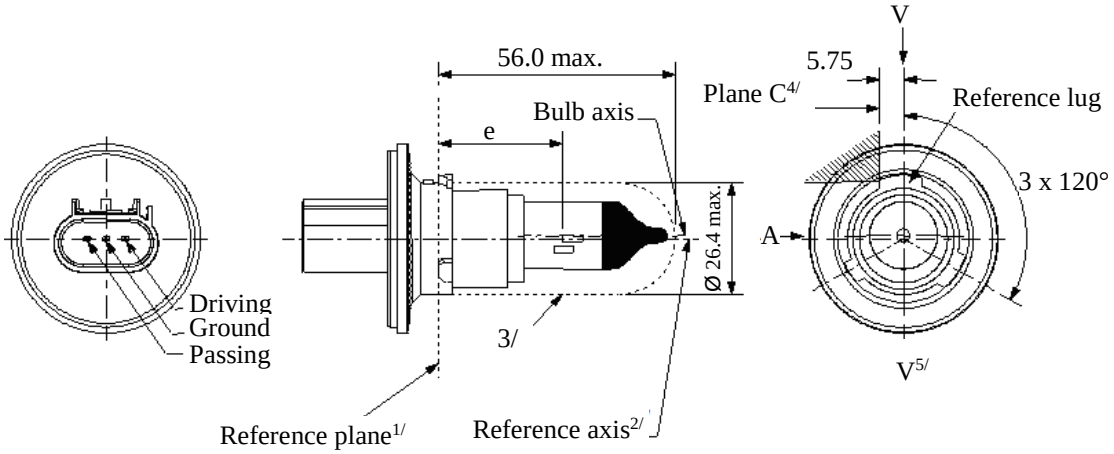

Figure 1 - Main drawings

1/ The reference plane is the plane formed by the underside of the three radiused tabs of the cap.

2/ The reference axis is perpendicular to the reference plane and crosses the intersection of the two perpendiculars as indicated in Figure 2 on sheet HS6/2.

3/ Glass bulb and supports shall not exceed the envelope as indicated. The envelope is concentric to the reference axis.

4/ The filament light source shall be rotated in the measuring holder until the reference lug contacts plane C of the holder.

5/ Plane V-V is the plane perpendicular to the reference plane passing through the reference axis and parallel to plane C.

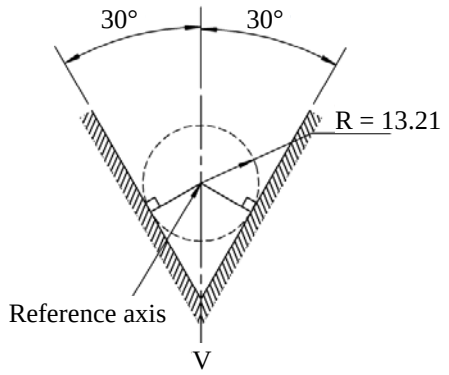

Figure 2 – Definition of reference axis[2/]

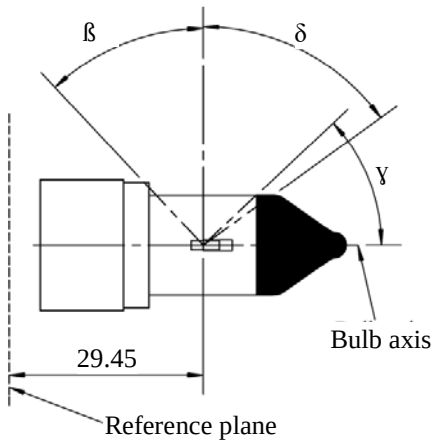

Figure 3 - Undistorted area[6/] and opaque coating[7/]

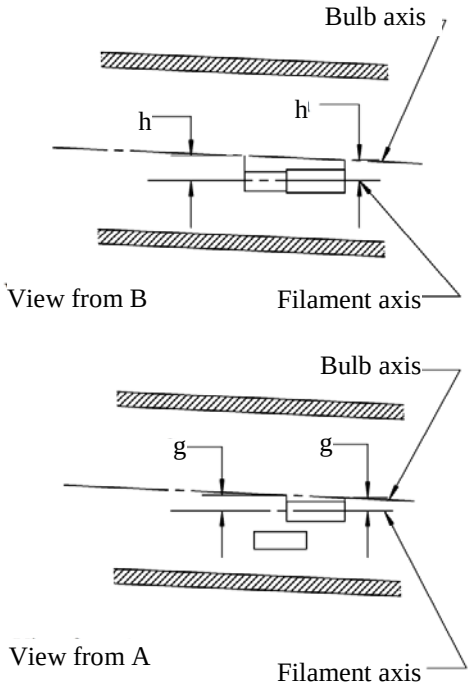

Figure 4 – Bulb offset[8/]

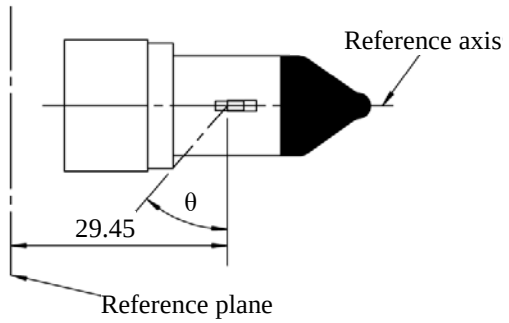

Figure 5 – Light blocking toward[9/] cap

6/ Glass bulb shall be optically distortion-free axially and cylindrically within the angles β and δ. This requirement applies to the whole bulb circumference within the angles β and δ and does not need to be verified in the area covered by the opaque coating.

7/ The opaque coating shall extend at least to the cylindrical part of the bulb on the whole bulb top circumference. It shall moreover extend at least to a plane parallel to the reference plane where γ crosses the outer bulb surface as shown in Figure 3 (view in direction B as indicated on sheet HS6/1).

8/ Offset of passing-beam filament in relation to the bulb axis is measured in two planes parallel to the reference plane where the projection of the outside end turns nearest to and farthest from the reference plane crosses the passing-beam filament axis.

9/ Light shall be blocked over the cap end of the bulb extending to angle θ. This requirement applies in all directions around the reference axis.

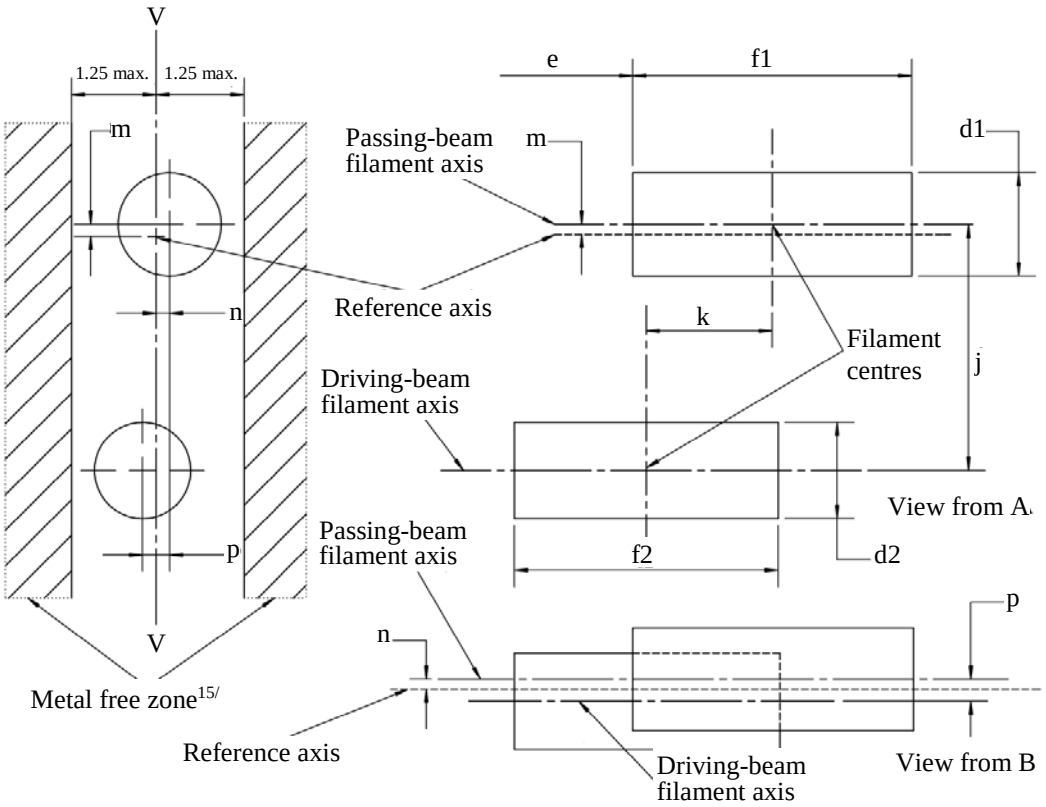

Figure 6 – Position and dimensions of filaments[10/, 11/, 12/, 13/, 14/]

10/ Dimensions j, k and p are measured from the centre of the passing-beam filament to the centre of the driving-beam filament.

11/ Dimensions m and n are measured from the reference axis to the centre of the passing-beam filament.

12/ Both filaments axis are to be held within a 2° tilt with respect to the reference axis about the centre of the respective filament.

13/ Note concerning the filament diameters: for the same manufacturer, the design filament diameter of standard (étalon) filament light source and filament light source of normal production shall be the same.

14/ For both the driving-beam and the passing-beam filament distortion shall not exceed ±5 per cent of filament diameter from a cylinder.

15/ The metal free zone limits the location of lead wires within the optical path. No metal parts shall be located in the shaded area as seen in Figure 6.

Dimensions in mm		*Tolerance*	
		Filament light sources of normal production	*Standard filament light source*
d1 [13/, 17/]	1.4 max.	-	-
d2 [13/, 17/]	1.4 max.	-	-
e [16/]	29.45	±0.20	±0.10
f1 [16/]	4.4	±0.50	±0.25
f2 [16/]	4.4	±0.50	±0.25
g [8/, 17/]	0.5 d1	±0.50	±0.30
h [8/]	0	±0.40	±0.20
j [10/]	2.5	±0.30	±0.20
k [10/]	2.0	±0.20	±0.10
m [11/]	0	±0.24	±0.20
n [11/]	0	±0.24	±0.20
p [10/]	0	±0.30	±0.20
β	42° min.	-	-
δ	52° min.	-	-
γ	43°	+0° / -5°	+0° / -5°
θ [9/]	41°	±4°	±4°
Cap PX26.4t in accordance with IEC Publication 60061 (sheet 7004-128-3)			
Electrical and photometric characteristics [18/]			

Rated values	Volts	12		12	
	Watts	40	35	40	35
Test voltage	Volts	13.2		13.2	
Objective values	Watts	45 max.	40 max.	45 max.	40 max.
	Luminous flux	900 ± 15 %	600 ± 15 %		
Reference luminous flux at approximately		12 V		630/420	
		13.2 V		900/600	

[16/] The ends of the filament are defined as the points where, when the viewing direction is direction A as shown on sheet HS6/1, the projection of the outside of the end turns crosses the filament axis.

[17/] d1 is the actual diameter of the passing-beam filament.
d2 is the actual diameter of the driving-beam filament.

[18/] The values indicated in the left-hand columns relate to the driving-beam filament and those in the right-hand columns to the passing-beam filament.

The drawings are intended only to illustrate the essential dimensions (in mm) of the filament light source.

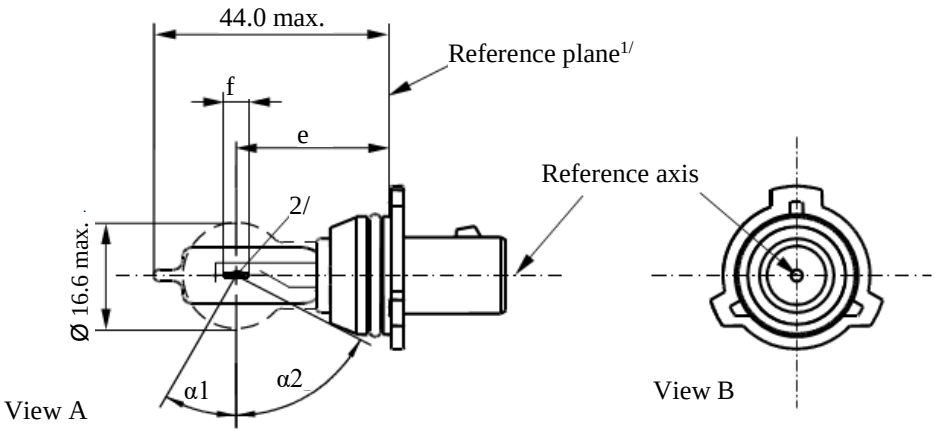

Figure 1 – Main drawing P13W

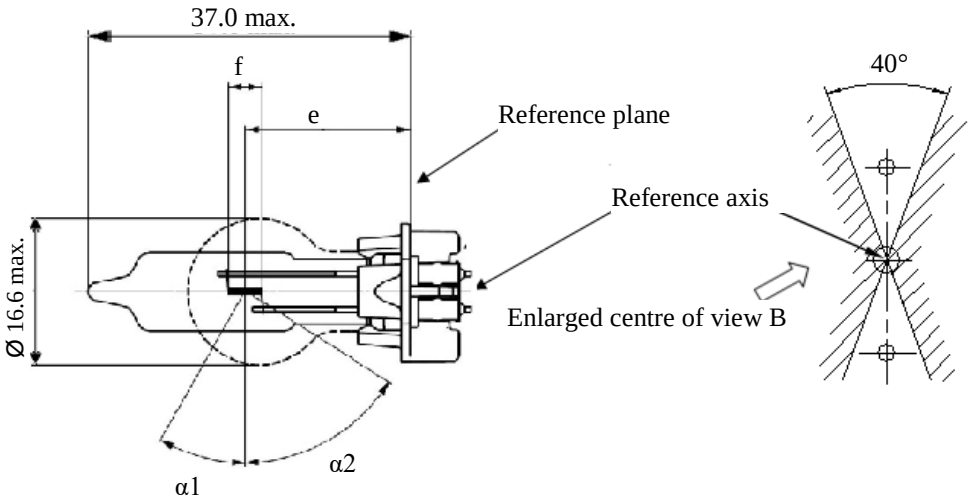

Figure 3 – Main drawing PW13W

Figure 2 – Metal free zone3/

1/ The reference plane is defined by the meeting points of the cap-holder fit.

2/ No actual filament diameter restrictions apply but the objective is d max. = 1.0 mm.

3/ No opaque parts other than filament turns shall be located in the shaded area indicated in Figure 2. This applies to the rotational body within the angles $\alpha_1 + \alpha_2$.

Dimensions in mm			*Filament light sources of normal production*	*Standard filament light source*
e [5/]	P13W		25.0 [4/]	25.0 ± 0.25
	PW13W		19.25 [4/]	19.25 ± 0.25
f [5/]			4.3 [4/]	4.3 ± 0.25
α_1 [6/]			30.0° min.	30.0° min.
α_2 [6/]			58.0° min.	58.0° min.
P13W Cap PG18.5d-1			in accordance with IEC Publication 60061 (sheet 7004-147-1)	
PW13W Cap WP3.3x14.5-7			in accordance with IEC Publication 60061 (sheet 7004-164-2)	
Electrical and photometric characteristics				
Rated values	Voltage	V	12	12
	Wattage	W	13	13
Test voltage		V	13.5	13.5
Objective values	Wattage	W	19 max.	19 max.
	Luminous flux	lm	250	
		±	+15 % / –20 %	
Reference luminous flux at approximately 13.5 V				250 lm

4/ To be checked by means of a "Box system"; sheet P13W/3.

5/ The ends of the filament are defined as the points where, when the viewing direction is perpendicular to the plane through the filament lead-in wires, the projection of the outside of the end turns crosses the filament axis.

6/ No part of the cap beyond the reference plane shall interfere with angle α_2 as shown in Figure 1 on sheet P13W/1. The bulb shall be optically distortion free within the angles $\alpha_1 + \alpha_2$.
These requirements apply to the whole bulb circumference.

Screen projection requirements

This test is used to determine, by checking whether the filament is correctly positioned relative to the reference axis and reference plane, whether a filament light source complies with the requirements.

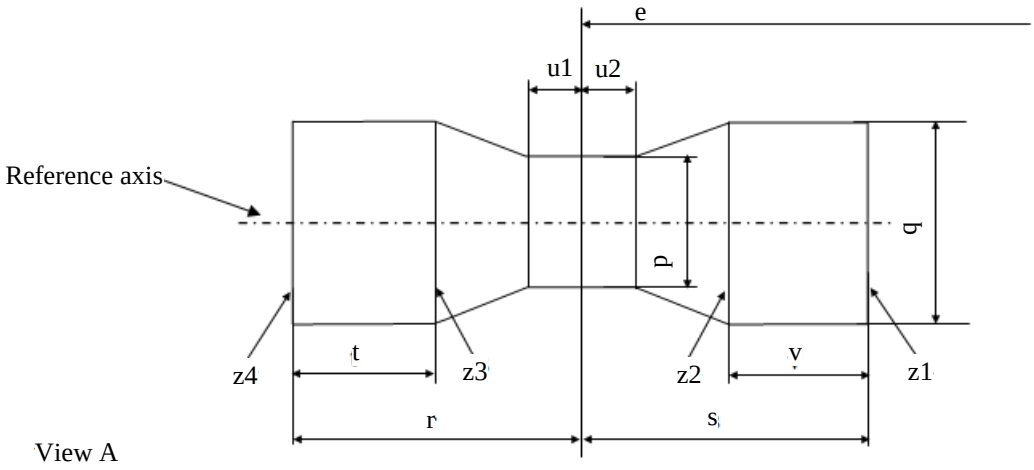

	p	*q*	*u1,u2*	*r,s*	*t,v*
Filament light sources of normal production	1.7	1.9	0.3	2.6	0.9
Standard filament light sources	1.5	1.7	0.25	2.45	0.6

The filament position is checked in two mutually perpendicular planes, one of them being the plane through the lead-in wires.

The ends of the filament as defined on sheet P13W/2, footnote 4/, shall lie between Z1 and Z2 and between the lines Z3 and Z4.

The filament shall lie entirely within the limits shown.

Sheet P19W/1

Categories P19W, PY19W, PR19W, PS19W, PSY19W, PSR19W, PW19W, PWY19W and PWR19W

The drawings are intended only to illustrate the essential dimensions (in mm) of the filament light source.

P19W,
PY19W,
PR19W,
PS19W,
PSY19W,
PSR19W

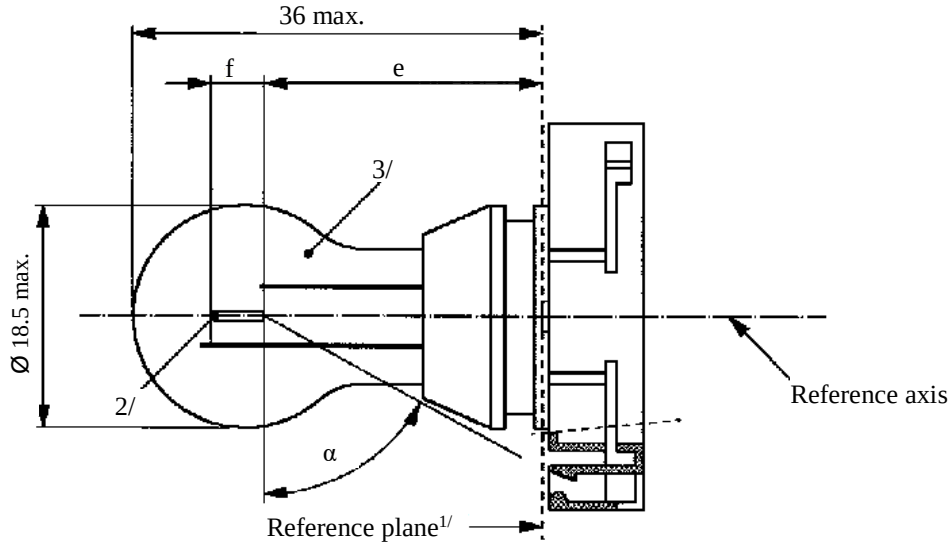

PW19W,
PWY19W,
PWR19W

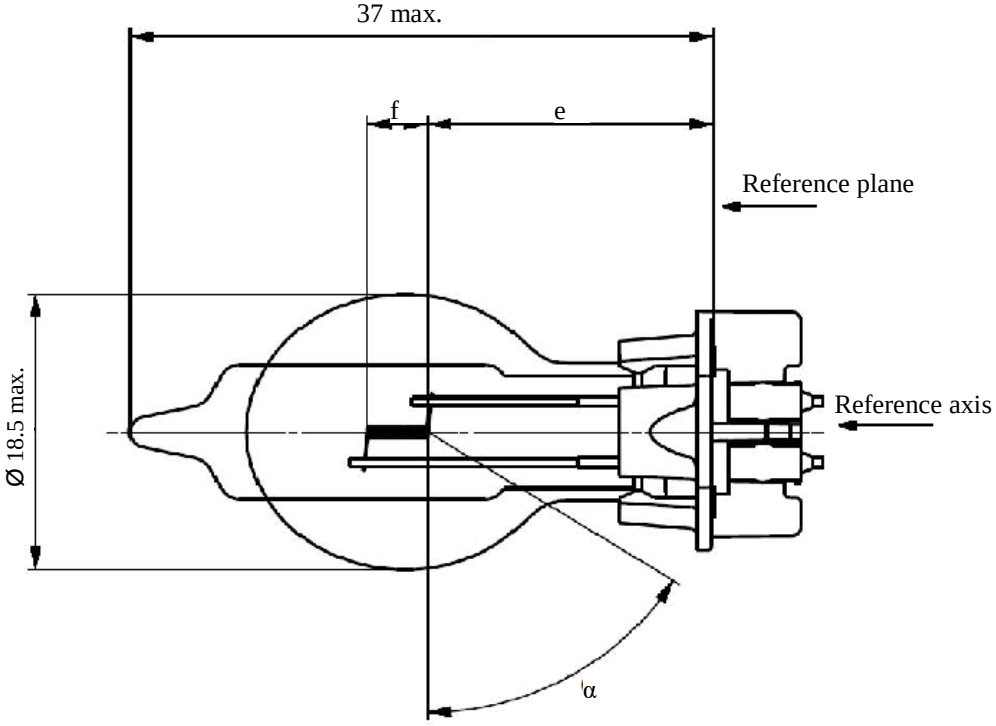

1/ The reference plane is defined by the meeting points of the cap-holder fit.

2/ No actual filament diameter restrictions apply but the objective is d max. = 1.1 mm.

3/ The light emitted from normal production filament light sources shall be white for categories P19W, PS19W and PW19W; amber for categories PY19W, PSY19W and PWY19W; red for categories PR19W, PSR19W and PWR19W (see also footnote 8/).

Sheet P19W/2

Categories P19W, PY19W, PR19W, PS19W, PSY19W, PSR19W, PW19W, PWY19W and PWR19W

Dimensions in mm [4/]		*Filament light sources of normal production*			*Standard filament light source* [8/]
		Min.	*Nom.*	*Max.*	
e [5/, 6/]	P19W, PS19W, PY19W, PSY19W, PR19W, PSR19W		24.0		24.0
	PW19W, PWY19W, PWR19W		18.1		18.1
f [5/, 6/]			4.0		4.0 ± 0.2
α [7/]		58°			58° min.
P19W Cap PGU20-1 PY19W Cap PGU20-2 PR19W Cap PGU20-5 PS19W Cap PG20-1 PSY19W Cap PG20-2 PSR19W Cap PG20-5		in accordance with IEC Publication 60061 (sheet 7004-127-2)			
PW19W Cap WP3.3x14.5-1 PWY19W Cap WP3.3x14.5-2 PWR19W Cap WP3.3x14.5-5		in accordance with IEC Publication 60061 (sheet 7004-164-2)			
Electrical and photometric characteristics					
Rated values	Volts		12		12
	Watts		19		19
Test voltage	Volts		13.5		13.5
Objective values	Watts		20 max.		20 max.
	Luminous flux	P19W PS19W PW19W	350 ± 15 %		
		PY19W PSY19W PWY19W	215 ± 20 %		
		PR19W PSR19W PWR19W	80 ± 20 %		
Reference luminous flux at approximately 13.5 V					White: 350 lm Amber: 215 lm Red: 80 lm

4/ For categories PS19W, PSY19W and PSR19W, dimensions may be checked with O-ring removed to assure the correct mounting during testing.

5/ The filament position is checked by means of a "Box system"; sheet P19W/3.

6/ The ends of the filament are defined as the points where, when the viewing direction is perpendicular to the plane through the filament lead-in wires as showed in the drawing on sheet P19W/1, the projection of the outside of the end turns crosses the filament axis.

7/ No part of the cap beyond the reference plane shall interfere with angle α. The bulb shall be optically distortion free within the angle 2α + 180°.

8/ The light emitted from standard filament light sources shall be white for categories P19W, PS19W and PW19W; white or amber for categories PY19W, PSY19W and PWY19W; white or red for categories PR19W, PSR19W and PWR19W.

Screen projection requirements

This test is used to determine, by checking whether the filament is correctly positioned relative to the reference axis and reference plane, whether a filament light source complies with the requirements.

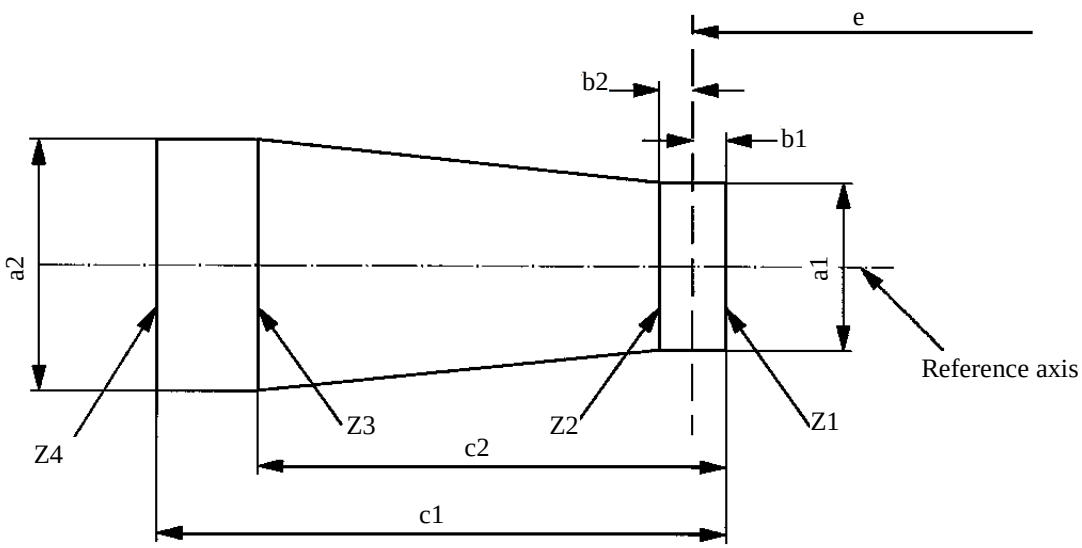

P19W, PY19W, PR19W, PS19W, PSY19W, PSR19W	*a1*	*a2*	*b1, b2*	*c1*	*c2*
Filament light sources of normal production	2.9	3.9	0.5	5.2	3.8
Standard filament light sources	1.5	1.7	0.25	4.7	3.8

PW19W, PWY19W and PWR19W	*a1*	*a2*	*b1, b2*	*c1*	*c2*
Filament light sources of normal production	2.5	2.5	0.4	5.2	3.8
Standard filament light sources	1.5	1.7	0.25	4.7	3.8

The filament position is checked in two mutually perpendicular planes, one of them being the plane through the lead-in wires.

The ends of the filament as defined on sheet P19W/2, footnote 6/, shall lie between Z1 and Z2 and between the lines Z3 and Z4.

The filament shall lie entirely within the limits shown.

Category P21W **Sheet P21W/1**

The drawings are intended only to illustrate the essential dimensions (in mm) of the filament light source.

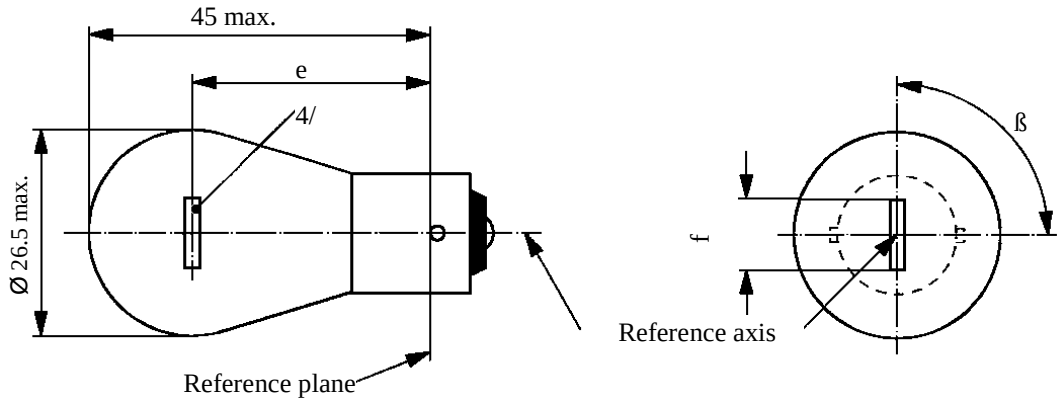

Dimensions in mm		*Filament light sources of normal production*			*Standard filament light source*
		Min.	*Nom.*	*Max.*	
e	6, 12 V		31.8 3/		31.8 ± 0.3
	24 V	30.8	31.8	32.8	
f	12 V	5.5	6.0	7.0	6.0 ± 0.5
	6 V			7.0	
Lateral deviation 1/	6, 12 V			3/	0.3 max.
	24 V			1.5	
β		75°	90°	105°	90° ± 5°
Cap BA15s in accordance with IEC Publication 60061 (sheet 7004-11A-9) 2/					
Electrical and photometric characteristics					
Rated values	Volts	6	12	24	12
	Watts	21			21
Test voltage	Volts	6.75	13.5	28.0	13.5
Objective values	Watts	27.6 max.	26.5 max.	29.7 max.	26.5 max.
	Luminous flux	460 ± 15 %			
Reference luminous flux: 460 lm at approximately 13.5 V					

1/ Maximum lateral deviation of filament centre from two mutually perpendicular planes both containing the reference axis and one containing the axis of the pins.

2/ Filament light sources with cap BA15d may be used for special purposes; they have the same dimensions.

3/ To be checked by means of a "Box system"; sheet P21W/2.

4/ In this view the filament of the 24 V type may be straight or V-shaped. If it is straight, the screen projection requirements, sheet P21W/2, apply. If it is V-shaped, the filament ends shall be at the same distance within ±3 mm from the reference plane.

Screen projection requirements

This test is used to determine, by checking whether the filament is correctly positioned relative to the reference axis and reference plane and has an axis perpendicular, within ±15°, to the plane through the centre line of the pins (P21W) or of the reference pin (PY21W and PR21W) and the reference axis, whether a filament light source complies with the requirements.

Side elevation Front elevation

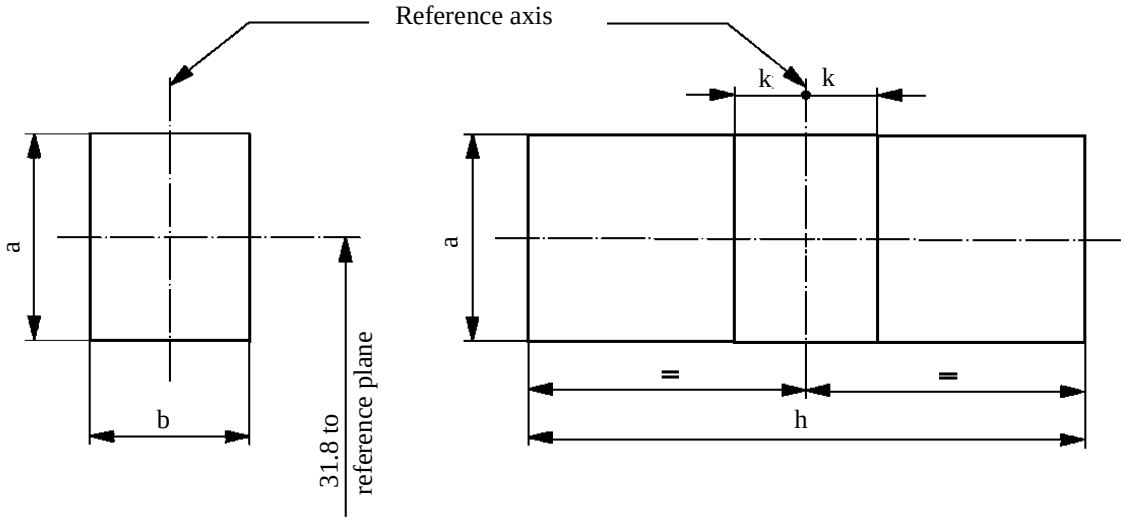

Reference	*a*	*b*	*h*	*k*
Dimension	3.5	3.0	9.0	1.0

Test procedures and requirements

1. The filament light source is placed in a holder capable of being rotated about its axis and having either a calibrated scale or fixed stops corresponding to the angular displacement tolerance limits. The holder is then so rotated that an end view of the filament is seen on the screen on to which the image of the filament is projected. The end view of the filament shall be obtained within the angular displacements tolerance limits.

2. Side elevation

   The filament light source placed with the cap down, the reference axis vertical and the filament seen end-on, the projection of the filament shall lie entirely within a rectangle of height "a" and width "b", having its centre at the theoretical position of the centre of the filament.

3. Front elevation

   The filament light source placed with the cap down and the reference axis vertical, the filament light source being viewed in a direction at right angles to the filament axis:

3.1. The projection of the filament shall lie entirely within a rectangle of height "a" and width "h", having its centre at the theoretical position of the centre of the filament.

3.2. The centre of the filament shall not be offset by more than distance "k" from the reference axis.

Category P21/4W **Sheet P21/4W/1**

The drawings are intended only to illustrate the essential dimensions (in mm) of the filament light source.

a = major (high wattage) filament
b = minor (low wattage) filament

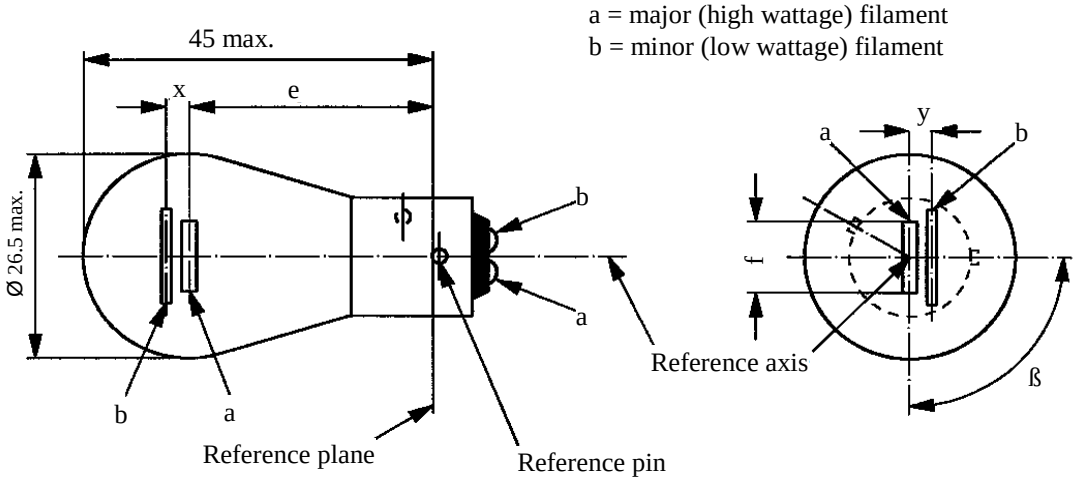

Dimensions in mm		*Filament light sources of normal production*				*Standard filament light source*
		Min.	*Nom.*	*Max.*		
e			31.8 [1/]			31.8 ± 0.3
f				7.0		7.0 + 0 /- 2
Lateral deviation				[1/]		0.3 max. [2/]
x,y		[1/]				2.8 ± 0.5
β		75° [1/]	90° [1/]	105° [1/]		90° ± 5°
Cap BAZ15d in accordance with IEC Publication 60061 (sheet 7004-11C-3)						
Electrical and photometric characteristics						
Rated values	Volts	12		24		12
	Watts	21	4	21	4	21/4
Test voltage	Volts	13.5		28.0		13.5
Objective values	Watts	26.5 max.	5.5 max.	29.7 max.	8.8 max.	26.5/5.5 max.
	Luminous flux	440	15	440	20	
	± %	15	20	15	20	
Reference luminous flux: 440 lm and 15 lm at approximately 13.5 V						

1/ These dimensions shall be checked by means of a "Box system"[3/] based on the dimensions and tolerances shown above. "x" and "y" refer to the major (high wattage) filament, not to the reference axis. Means of increasing the positioning accuracy of the filament and of the cap-holder assembly are under consideration.

2/ Maximum lateral deviation of the major filament centre from two mutually perpendicular planes both containing the reference axis and one containing the axis of the reference pin.

3/ The "Box system" is the same as for filament light source P21/5W; see sheets P21/5W/2 to 3.

Category P21/5W **Sheet P21/5W/1**

The drawings are intended only to illustrate the essential dimensions (in mm) of the filament light source.

a = major (high wattage) filament
b = minor (low wattage) filament

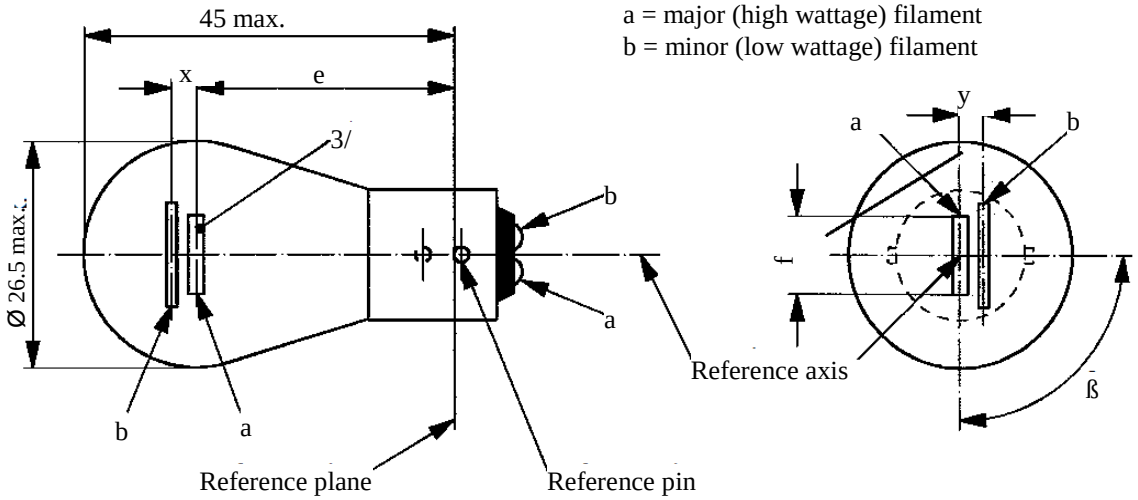

Dimensions in mm		*Filament light sources of normal production*			*Standard filament light source*
		Min.	*Nom.*	*Max.*	
e	6, 12 V		31.8 1/		31.8 ± 0.3
	24 V	30.8	31.8	32.8	
f	6, 12 V			7.0	7.0 + 0 /- 2
Lateral deviation 2/	6, 12 V			1/	0.3 max.
	24 V			1.5	
x, y	6, 12 V		1/		2.8 ± 0.3
x	24 V 3/	-1.0	0	1.0	
y	24 V 3/	1.8	2.8	3.8	
β		75°	90°	105°	90° ± 5°

Cap BAY15d in accordance with IEC Publication 60061 (sheet 7004-11B-7)

Electrical and photometric characteristics

Rated values	Volts	6		12		24		12
	Watts	21	5	21	5	21	5	21/5
Test voltage	Volts	6.75		13.5		28.0		13.5
Objective values	Watts	27.6 max.	6.6 max.	26.5 max.	6.6 max.	29.7 max.	11.0 max.	26.5 and 6.6 max.
	Luminous flux	440	35	440	35	440	40	
	± %	15	20	15	20	15	20	

Reference luminous flux: 440 and 35 lm at approximately 13.5 V

For the notes see sheet P21/5W/2

Category P21/5W **Sheet P21/5W/2**

[1/] These dimensions shall be checked by means of a "Box system". See sheets P21/5W/2 and P21/5W/3. "x" and "y" refer to the major (high wattage) filament, not to the reference axis.

[2/] Maximum lateral deviation of the major (high wattage) filament centre from two mutually perpendicular planes both containing the reference axis and one containing the axis of the reference pin.

[3/] In this view the filaments of the 24 V type may be straight or V-shaped. If the filaments are straight, the screen projection requirements apply. If they are V-shaped, the ends of each filament shall be at the same distance within ±3 mm from the reference plane.

Screen projection requirements

This test is used to determine, by checking whether:

(a) The major (high wattage) filament is correctly positioned relative to the reference axis and reference plane and has an axis perpendicular, within ±15°, to the plane through the centres of the pins and the reference axis; and whether

(b) The minor (low wattage) filament is correctly positioned relative to the major (high wattage) filament, whether a filament light source complies with the requirements.

Test procedure and requirements

1. The filament light source is placed in a holder capable of being rotated about its axis and having either a calibrated scale or fixed stops corresponding to the angular displacement tolerance limits. (i.e. 15°). The holder is then so rotated that an end view of the major filament is seen on the screen on which the image of the filament is projected. The end view of that filament shall be obtained within the angular displacement tolerance limits.

2. Side elevation

The filament light source placed with the cap down, the reference axis vertical, the reference pin to the right and the major filament seen end-on:

2.1. The projection of the major filament shall lie entirely within a rectangle of height "a" and width "b", having its centre at the theoretical position of the centre of the filament;

2.2. The projection of the minor filament shall lie entirely:

2.2.1. Within a rectangle of width "c" and height "d" having its centre at a distance "v" to the right of and at a distance "u" above the theoretical position of the centre of the major filament;

2.2.2. Above a straight line tangential to the upper edge of the projection of the major filament and rising from left to right at an angle of 25°.

2.2.3. To the right of the projection of the major filament.

3. Front elevation

The filament light source being placed with the cap down and the reference axis vertical, the filament light source being viewed in a direction at right angles to axis of the major filament:

3.1. The projection of the major filament shall lie entirely within a rectangle of height "a" and width "h", centred on the theoretical position of the centre of the filament;

3.2. The centre of the major filament shall not be offset by more than distance "k" from the reference axis.

3.3. The centre of the minor filament axis shall not be offset from the reference axis by more than ±2 mm (±0.4 mm for standard filament light sources).

Category P21/5W **Sheet P21/5W/3**

Dimensions in mm

Side elevation

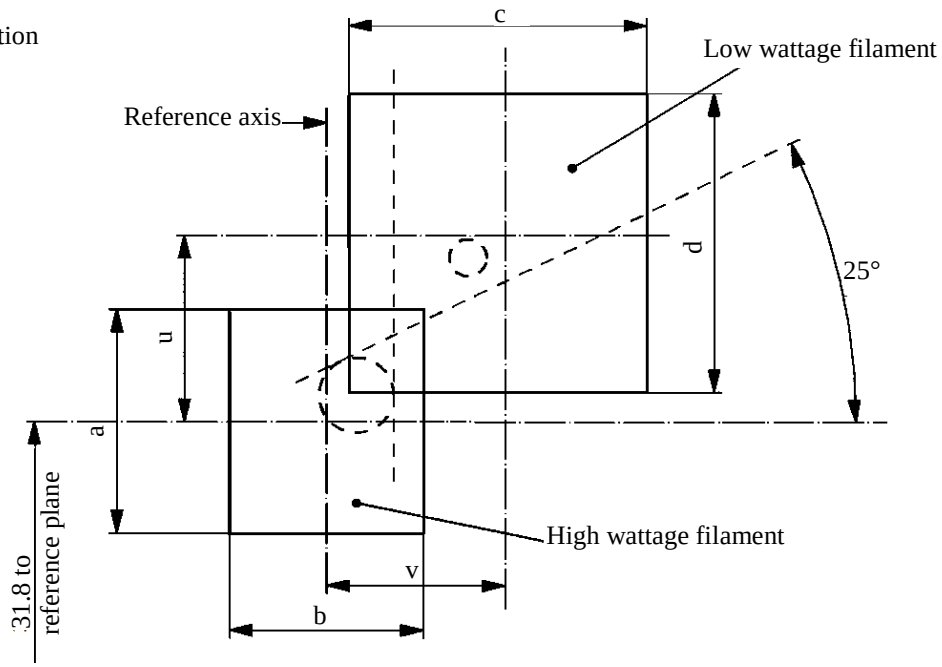

Reference	*a*	*b*	*c*	*d*	*u*	*v*
Dimensions	3.5	3.0	4.8		2.8	

Front elevation

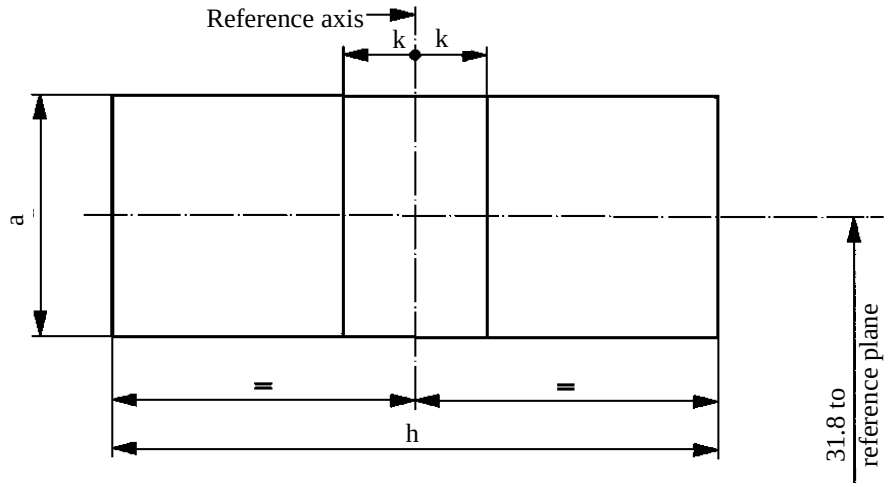

Reference	*a*	*h*	*k*
Dimensions	3.5	9.0	1.0

Sheet P24W/1

Categories P24W, PX24W, PY24W, PR24W, PS24W, PSX24W, PSY24W, PSR24W, PW24W, PWY24W and PWR24W

The drawings are intended only to illustrate the essential dimensions (in mm) of the filament light source.

P24W,
PX24W,
PY24W, PR24W
PS24W,
PSX24W,
PSY24W, PSR24W

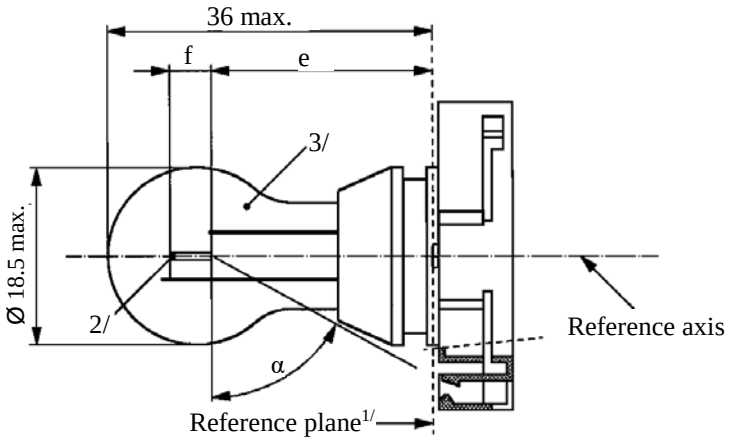

PW24W,
PWY24W,
PWR24W

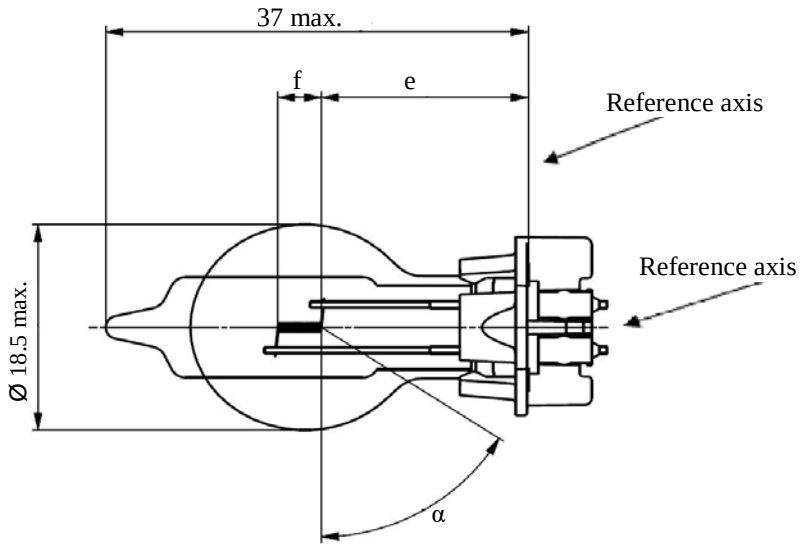

1/ The reference plane is defined by the meeting points of the cap-holder fit.

2/ No actual filament diameter restrictions apply but the objective is d max. = 1.1 mm.

3/ The light emitted from normal production filament light sources shall be white for categories P24W, PX24W, PS24W, PSX24W and PW24W; amber for categories PY24W, PSY24W and PWY24W; red for categories PR24W, PSR24W and PWR24W (see also footnote 8/).

Sheet P24W/2

Categories P24W, PX24W, PY24W, PR24W, PS24W, PSX24W, PSY24W, PSR24W, PW24W, PWY24W and PWR24W

Dimensions in mm [4/]		*Filament light sources of normal production*			*Standard filament light source* [8/]
		Min.	*Nom.*	*Max.*	
e [5/, 6/]	P24W, PY24W, PR24W, PS24W, PSY24W, PSR24W, PX24W, PSX24W		24.0		24.0
	PW24W, PWY24W, PWR24W		18.1		18.1
f [5/, 6/]	P24W, PY24W, PR24W, PS24W, PSY24W, PSR24W, PW24W, PWY24W, PWR24W		4.0		4.0
	PX24W, PSX24W		4.2		4.2
α [7/]		58.0°			58.0° min.
P24W Cap PGU20-3 PX24W Cap PGU20-7 PY24W Cap PGU20-4 PR24W Cap PGU20-6 PS24W Cap PG20-3 PSX24W Cap PG20-7 PSY24W Cap PG20-4 PSR24W Cap PG20-6		in accordance with IEC Publication 60061 (sheet 7004-127-2)			
PW24W Cap WP3.3x14.5-3 PWY24W Cap WP3.3x14.5-4 PWR24W Cap WP3.3x14.5-6		in accordance with IEC Publication 60061 (sheet 7004-164-2)			
Electrical and photometric characteristics					
Rated values	Volts	12			12
	Watts	24			24
Test voltage	Volts	13.5			13.5
Objective values	Watts	25 max.			25 max.
	Luminous flux: P24W, PS24W, PW24W	500 +10/-20 %			
	Luminous flux: PX24W, PSX24W	500 +10/-15 %			
	Luminous flux: PY24W, PSY24W, PWY24W	300 +15/-25 %			
	Luminous flux: PR24W, PSR24W, PWR24W	115 +15/-25 %			
Reference luminous flux at approximately		12 V			White: 345 lm
		13.2 V			White: 465 lm
		13.5 V			White: 500 lm Amber: 300 lm Red: 115 lm

4/ For categories PS24W, PSX24W, PSY24W and PSR24W, dimensions may be checked with O-ring removed to assure the correct mounting during testing.

5/ The filament position is checked by means of a "Box system"; sheet P24W/3.

6/ The ends of the filament are defined as the points where, when the viewing direction is perpendicular to the plane through the filament lead-in wires as showed in the drawing on sheet P24W/1, the projection of the outside of the end turns crosses the filament axis.

7/ No part of the cap beyond the reference plane shall interfere with angle α. The bulb shall be optically distortion free within the angle 2α + 180°.

8/ The light emitted from standard filament light sources shall be white for categories P24W, PX24W, PS24W, PSX24W and PW24W; white or amber for categories PY24W, PSY24W and PWY24W; white or red for categories PR24W, PSR24W and PWR24W.

Screen projection requirements

This test is used to determine, by checking whether the filament is correctly positioned relative to the reference axis and reference plane, whether a filament light source complies with the requirements.

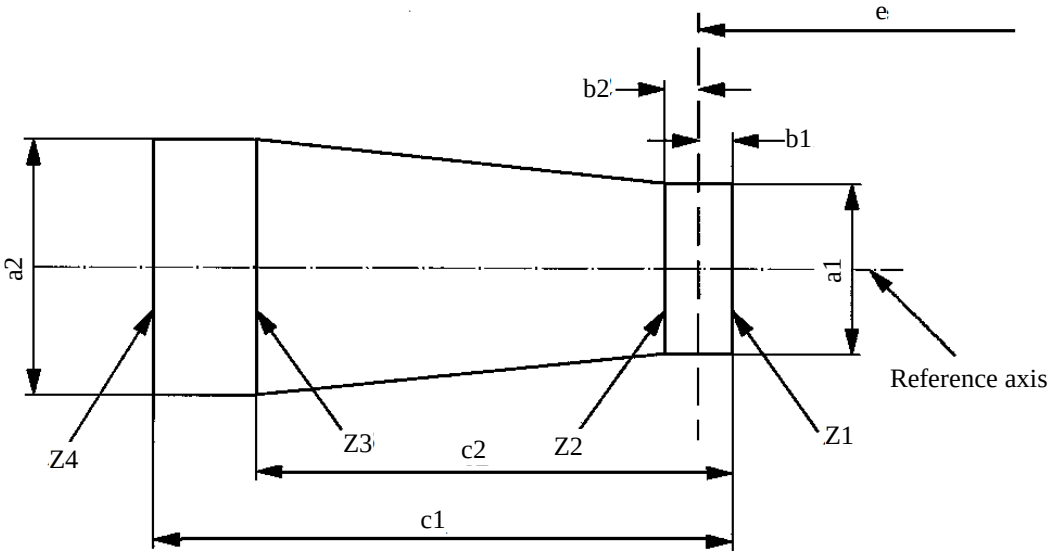

P24W, PY24W, PR24W, PS24W, PSY24W, PSR24W	*a1*	*a2*	*b1, b2*	*c1*	*c2*
Filament light sources of normal production	2.9	3.9	0.5	5.2	3.8
Standard filament light sources	1.5	1.7	0.25	4.7	3.8

PW24W, PWY24W, PWR24W	*a1*	*a2*	*b1, b2*	*c1*	*c2*
Filament light sources of normal production	2.5	2.5	0.4	5.0	3.8
Standard filament light sources	1.5	1.7	0.25	4.7	3.8

PX24W, PSX24W	*a1*	*a2*	*b1, b2*	*c1*	*c2*
Filament light sources of normal production	1.9	1.9	0.35	5.0	4.0
Standard filament light sources	1.5	1.5	0.25	4.7	4.0

The filament position is checked in two mutually perpendicular planes, one of them being the plane through the lead-in wires.

The ends of the filament as defined on sheet P24W/2, footnote 6/, shall lie between Z1 and Z2 and between the lines Z3 and Z4.

The filament shall lie entirely within the limits shown.

The drawings are intended only to illustrate the essential dimensions (in mm) of the filament light source.

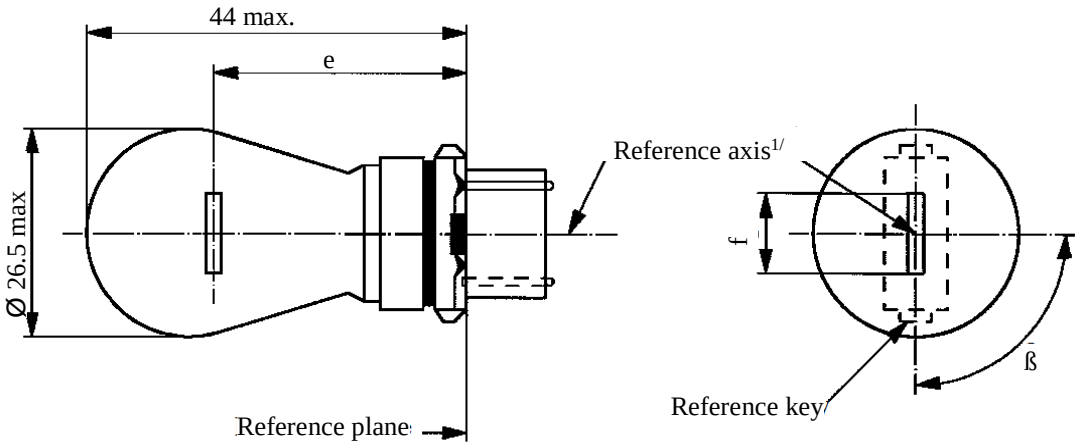

Dimensions in mm		*Filament light sources of normal production*			*Standard filament light source*
		Min.	*Nom.*	*Max.*	
e			27.9 3/		27.9 ± 0.3
f				9.9	9.9 + 0 / - 2
Lateral deviation 2/				3/	0.0 ± 0.4
β		75° 3/	90°	105° 3/	90° ± 5°
Cap W2.5x16d in accordance with IEC Publication 60061 (sheet 7004-104-1)					
Electrical and photometric characteristics					
Rated values	Volts	12			12
	Watts	27			27
Test voltage	Volts	13.5			13.5
Objective values	Watts	32.1 max.			32.1 max.
	Luminous flux	475 ± 15 %			
Reference luminous flux: 475 lm at approximately 13.5 V					

1/ The reference axis is defined with respect to the reference keys and is perpendicular to the reference plane.

2/ Maximum lateral deviation of filament centre from two mutually perpendicular planes both containing the reference axis and one containing the axis through the reference keys.

3/ To be checked by means of a "Box system", sheet P27W/2.

Screen projection requirements

This test is used to determine, by checking whether the filament is correctly positioned relative to the reference axis and reference plane and has an axis perpendicular, within ±15°, to the plane through the centres of the keys and the reference axis, whether a filament light source complies with the requirements.

Side elevation

Front elevation

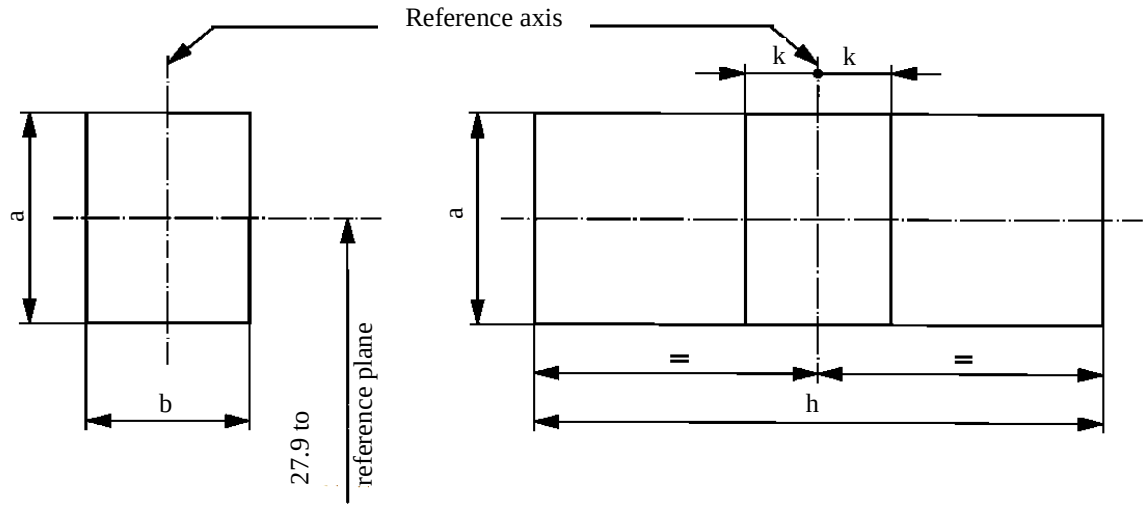

Reference	*a*	*b*	*h*	*k*
Dimension	3.5	3.0	11.9	1.0

Test procedures and requirements.

1. The filament light source is placed in a holder capable of being rotated about its axis and having either a calibrated scale or fixed stops corresponding to the angular displacement tolerance limits. The holder is then so rotated that an end view of the filament is seen on the screen on to which the image of the filament is projected. The end view of the filament shall be obtained within the angular displacements tolerance limits.

2. Side elevation

   The filament light source placed with the cap down, the reference axis vertical and the filament seen end-on, the projection of the filament shall lie entirely within a rectangle of height "a" and width "b", having its centre at the theoretical position of the centre of the filament.

3. Front elevation

   The filament light source placed with the cap down and the reference axis vertical, the filament light source being viewed in a direction at right angles to the filament axis:

3.1. The projection of the filament shall lie entirely within a rectangle of height "a" and width "h", having its centre at the theoretical position of the centre of the filament.

3.2. The centre of the filament shall not be offset by more than distance "k" from the reference axis.

The drawings are intended only to illustrate the essential dimensions (in mm) of the filament light source.

a = major (high wattage) filament
b = minor (low wattage) filament

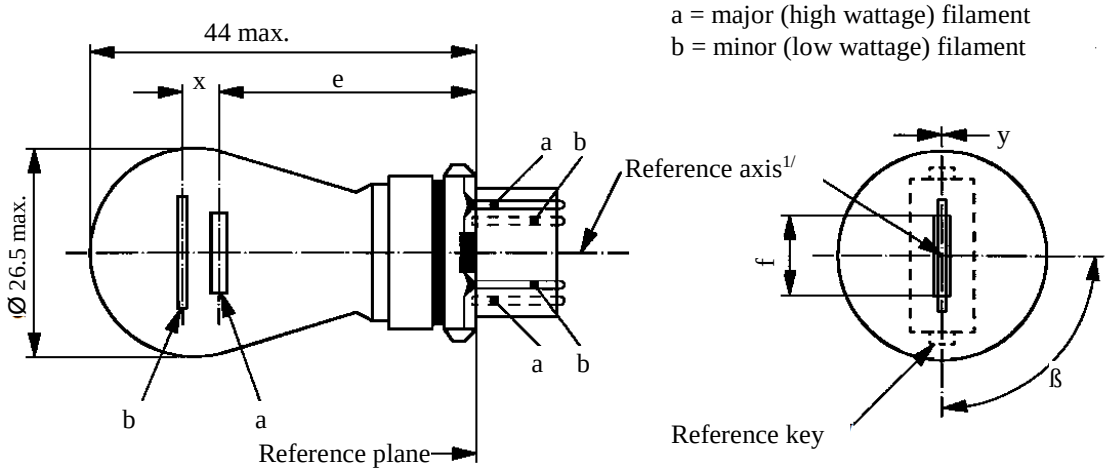

Dimensions in mm		*Filament light sources of normal production*			*Standard filament light source*	
		Min.	*Nom.*	*Max.*		
e			27.9 3/		27.9 ± 0.3	
f				9.9	9.9 + 0 / -2	
Lateral deviation 2/				3/	0.0 ± 0.4	
x 4/			5.1 3/		5.1 ± 0.5	
y 4/			0.0 3/		0.0 ± 0.5	
β		75° 3/	90°	105° 3/	90° ± 5°	
Cap W2.5x16q in accordance with IEC Publication 60061 (sheet 7004-104-1)						
Electrical and photometric characteristics						
Rated values	Volts	12			12	
	Watts	27	7		27	7
Test voltage	Volts	13.5			13.5	
Objective values	Watts	32.1 max.	8.5 max.		32.1 max.	8.5 max.
	Luminous flux	475 ± 15 %	36 ± 15 %			
Reference luminous flux: 475 and 36 lm at approximately 13.5 V						

1/ The reference axis is defined with respect to the reference keys and is perpendicular to the reference plane.
2/ Maximum lateral deviation of the major (high wattage) filament centre from two mutually perpendicular planes both containing the reference axis and one containing the axis through the reference keys.
3/ To be checked by means of a "Box system", sheets P27/7W/2 and 3.
4/ "x" and 'y" denote the offset of the axis of the minor (low wattage) filament with respect to the axis of the major (high wattage) filament.

Screen projection requirements

This test is used to determine, by checking whether:

(a) The major (high wattage) filament is correctly positioned relative to the reference axis and reference plane and has an axis perpendicular, within ±15°, to the plane through the centres of the keys and the reference axis; and whether:

(b) The minor (low wattage) filament is correctly positioned relative to the major (high wattage) filament, whether a filament light source complies with the requirements.

Test procedure and requirements.

1. The filament light source is placed in a holder capable of being rotated about its axis and having either a calibrated scale or fixed stops corresponding to the angular displacement tolerance limits. The holder is then so rotated that an end view of the major filament is seen on the screen on which the image of the filament is projected. The end view of that filament shall be obtained within the angular displacement tolerance limits.

2. Side elevation

The filament light source placed with the cap down, the reference axis vertical, the reference key to the right and the major filament seen end-on:

2.1. The projection of the major filament shall lie entirely within a rectangle of height "a" and width "b", having its centre at the theoretical position of the centre of the filament;

2.2. The projection of the minor filament shall lie entirely within a rectangle of width "c" and height "d" having its centre at a distance "u" above the theoretical position of the centre of the major filament.

3. Front elevation

The filament light source being placed with the cap down and the reference axis vertical, the filament light source being viewed in a direction at right angles to axis of the major filament:

3.1. The projection of the major filament shall lie entirely within a rectangle of height "a" and width "h", centred on the theoretical position of the centre of the filament;

3.2. The centre of the major filament shall not be offset by more than distance "k" from the reference axis;

3.3. The centre of the minor filament axis shall not be offset from the reference axis by more than ±2 mm (±0.4 mm for standard filament light sources).

Side elevation

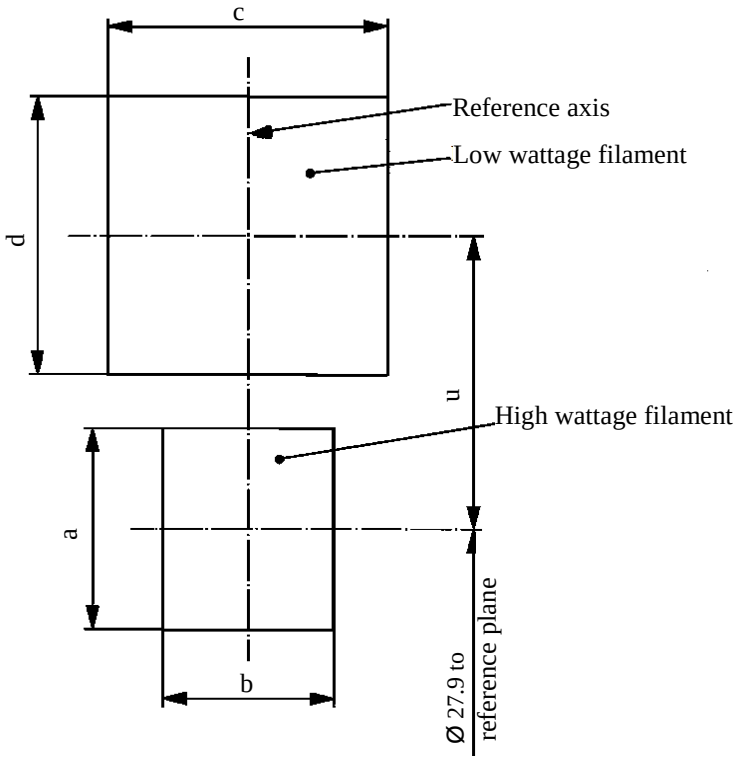

Reference	*a*	*b*	*c*	*d*	*u*
Dimension	3.5	3.0	4.8		5.1

Front elevation

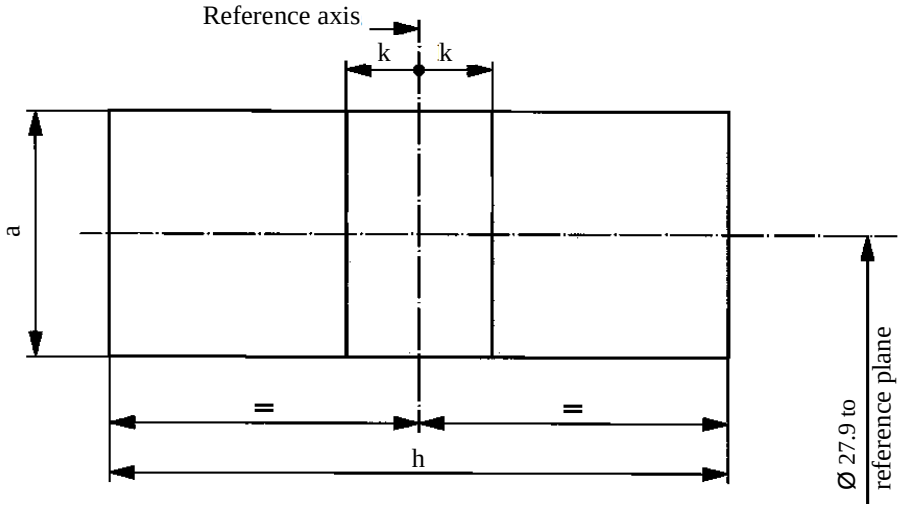

Reference	*a*	*h*	*k*
Dimension	3.5	11.9	1.0

Sheet PC16W/1

Categories PC16W, PCY16W, PCR16W, PW16W, PWY16W and PWR16W

The drawings are intended only to illustrate the essential dimensions (in mm) of the filament light source.

PC16W,
PCY16W,
PCR16W

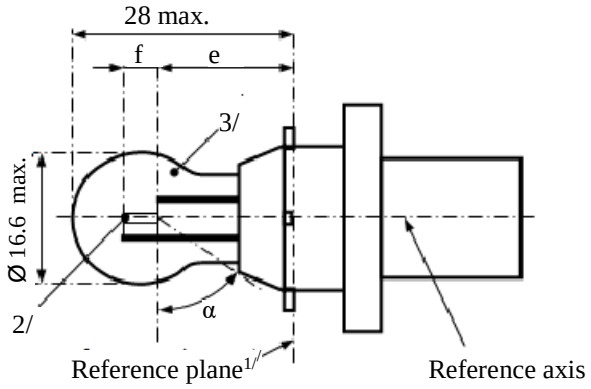

PW16W,
PWY16W,
PWR16W

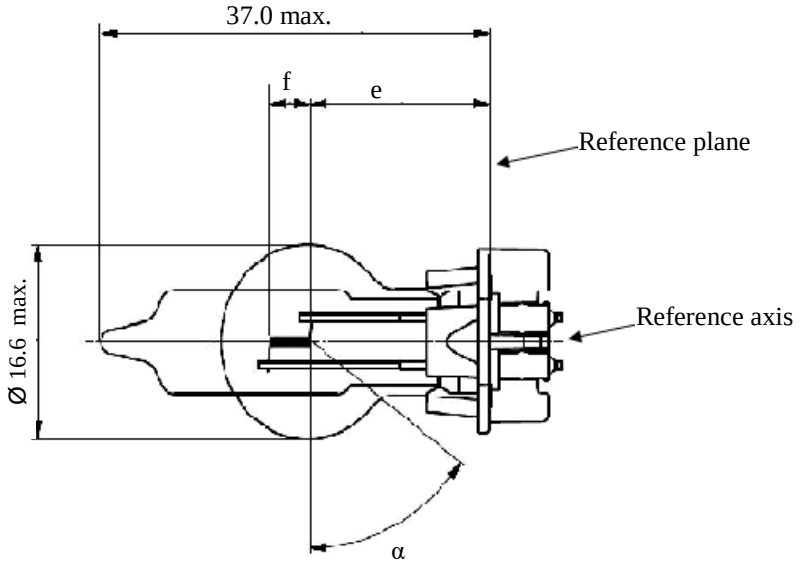

1/ The reference plane is defined by the meeting points of the cap-holder fit.
2/ No actual filament diameter restrictions apply but the objective is d max. = 1.1 mm.
3/ The light emitted from normal production filament light sources shall be white for category PC16W and PW16W; amber for category PCY16W and PWY16W; red for category PCR16W and PWR16W.
(see also footnote 7/).

Sheet PC16W/2

Categories PC16W, PCY16W, PCR16W, PW16W, PWY16W and PWR16W

Dimensions in mm		*Filament light sources of normal production*			*Standard filament light source* [7/]
		Min.	*Nom.*	*Max.*	
e [4/, 5/]	PC16W PCY16W PCR16W		18.5		18.5
	PW16W PWY16W PWR16W		17.1		17.1
f [4/, 5/]			4.0		4.0 ± 0.2
α [6/]		54°			54° min.
PC16W Cap PU20d-1 PCY16W Cap PU20d-2 PCR16W Cap PU20d-7		in accordance with IEC Publication 60061 (sheet 7004-158-1)			
PW16W Cap WP3.3x14.5-8 PWY16W Cap WP3.3x14.5-9 PWR16W Cap WP3.3x14.5-10		in accordance with IEC Publication 60061 (sheet 7004-164-2)			
Electrical and photometric characteristics					
Rated values	Volts	12			12
	Watts	16			16
Test voltage	Volts	13.5			13.5
Objective values	Watts	17 max.			17 max.
	Luminous flux: PC16W PW16W	300 ± 15 %			
	Luminous flux: PCY16W PWY16W	180 ± 20 %			
	Luminous flux: PCR16W PWR16W	70 ± 20 %			
Reference luminous flux at approximately		13.5 V			White: 300 lm Amber: 180 lm Red: 70 lm

4/ The filament position is checked by means of a "Box system"; sheet PC16W/3.

5/ The ends of the filament are defined as the points where, when the viewing direction is perpendicular to the plane through the filament lead-in wires as showed in the drawing on sheet PC16W/1, the projection of the outside of the end turns crosses the filament axis.

6/ No part of the cap beyond the reference plane shall interfere with angle α. The bulb shall be optically distortion free within the angle 2α + 180°.

7/ The light emitted from standard filament light sources shall be white for category PC16W and PW16W; white or amber for category PCY16W and PWY16W; white or red for category PCR16W and PWR16W.

Sheet PC16W/3

Categories PC16W, PCY16W, PCR16W, PW16W, PWY16W and PWR16W

Screen projection requirements

This test is used to determine, by checking whether the filament is correctly positioned relative to the reference axis and reference plane, whether a filament light source complies with the requirements.

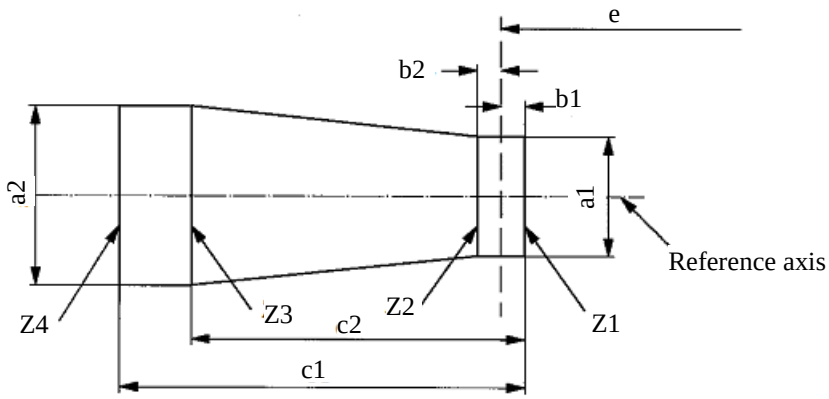

PC16W, PCY16W, PCR16W	*a1*	*a2*	*b1, b2*	*c1*	*c2*
Filament light sources of normal production	2.9	3.9	0.5	5.2	3.8
Standard filament light sources	1.5	1.7	0.25	4.7	3.8

PW16W, PWY16W and PWR16W	*a1*	*a2*	*b1, b2*	*c1*	*c2*
Filament light sources of normal production	2.5	2.5	0.4	5.2	3.8
Standard filament light sources	1.5	1.7	0.25	4.7	3.8

The filament position is checked in two mutually perpendicular planes, one of them being the plane through the lead-in wires.

The ends of the filament as defined on sheet PC16W/2, footnote 5/, shall lie between Z1 and Z2 and between the lines Z3 and Z4.

The filament shall lie entirely within the limits shown.

The drawings are intended only to illustrate the essential dimensions (in mm) of the filament light source.

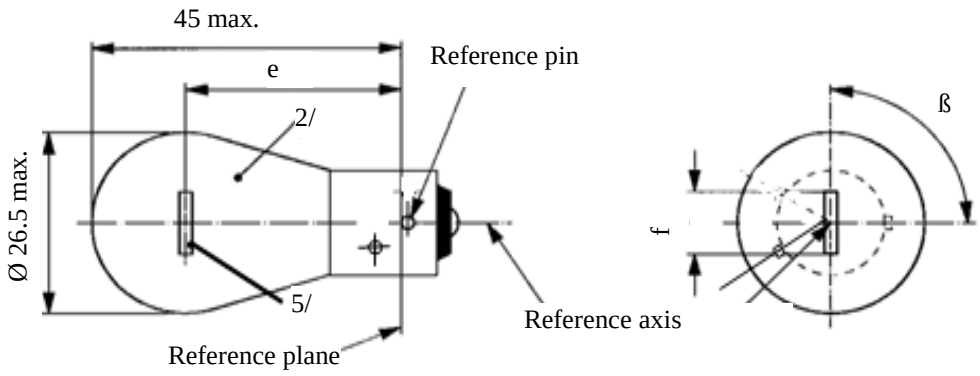

Dimensions in mm		*Filament light sources of normal production*			*Standard filament light source* [4/]
		Min.	*Nom.*	*Max.*	
e	12 V		31.8 [3/]		31.8 ± 0.3
	24 V	30.8	31.8	32.8	
f	12 V	5.5	6.0	7.0	6.0 ± 0.5
Lateral deviation [1/]	12 V			[3/]	0.3 max
	24 V			1.5	
β		75°	90°	105°	90° ± 5°
Cap BAW15s in accordance with IEC Publication 60061 (sheet 7004-11E-1)					
Electrical and photometric characteristics					
Rated values:	Volts	12	24		12
	Watts	21			21
Test voltage:	Volts	13.5	28.0		
Objective values:	Watts	26.5 max.	29.7 max.		26.5 max.
	Luminous flux:	110 ± 20 %			
Reference luminous flux at approximately 13.5 V:					White: 460 lm Red: 110 lm

1/ Maximum lateral deviation of filament centre from two mutually perpendicular planes both containing the reference axis and one containing the axis of the reference pin.

2/ The light emitted from normal production filament light sources shall be red (see also footnote 4/).

3/ To be checked by means of a "Box system", sheet P21W/2.

4/ The light emitted from standard filament light sources shall be white or red.

5/ In this view the filament of the 24 V type may be straight or V-shaped. If it is straight, the screen projection requirements, sheet P21W/2, apply. If it is V-shaped, the filament ends shall be at the same distance within ±3 mm from the reference plane.

Category PR21/4W **Sheet PR21/4W/1**

The drawings are intended only to illustrate the essential dimensions (in mm) of the filament light source.

a = major (high wattage) filament
b = minor (low wattage) filament

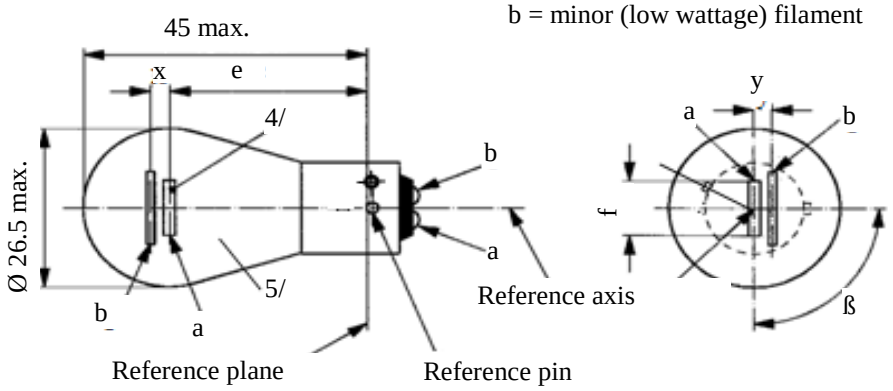

Dimensions in mm		*Filament light sources of normal production* [5/]				*Standard filament light source* [6/]
		Min.	*Nom.*	*Max.*		
e			31.8 [1/]			31.8 ± 0.3
f				7.0		7.0 + 0 / -2
Lateral deviation				[1/]		0.3 max.[2/]
x,y		[1/]				2.8 ± 0.5
β		75° [1/]	90° [1/]	105° [1/]		90° ± 5°
Cap BAU15d in accordance with IEC Publication 60061 (sheet 7004-19-2)						
Electrical and photometric characteristics						
Rated values	Volts	12		24 [4/]		12
	Watts	21	4	21	4	21/4
Test voltage	Volts	13.5		28.0		13.5
Objective values	Watts	26.5 max.	5.5 max.	29.7 max.	8.8 max.	26.5/5.5 max.
	Luminous flux	105	4	105	5	
	± %	20	25	20	25	
Reference luminous flux at approximately 13.5 V:				White: 440 lm and 15 lm Red: 105 lm and 4 lm		

[1/] These dimensions shall be checked by means of a "Boxsystem"[3] based on the dimensions and tolerances shown above. "x" and "y" refer to the major (high wattage) filament, not to the reference axis. Means of increasing the positioning accuracy of the filament and of the cap-holder assembly are under consideration.

[2/] Maximum lateral deviation of the major filament centre from two mutually perpendicular planes both containing the reference axis and one containing the axis of the reference pin.

[3/] The "Box system" is the same as for filament light source P21/5W; see sheets P21/5W/2 to 3.

[4/] The 24-volt filament light source is not recommended for future embodiments.

[5/] The light emitted from normal production filament light sources shall be red (see also footnote 6/).

[6/] The light emitted from standard filament light sources shall be white or red.

The drawings are intended only to illustrate the essential dimensions (in mm) of the filament light source.

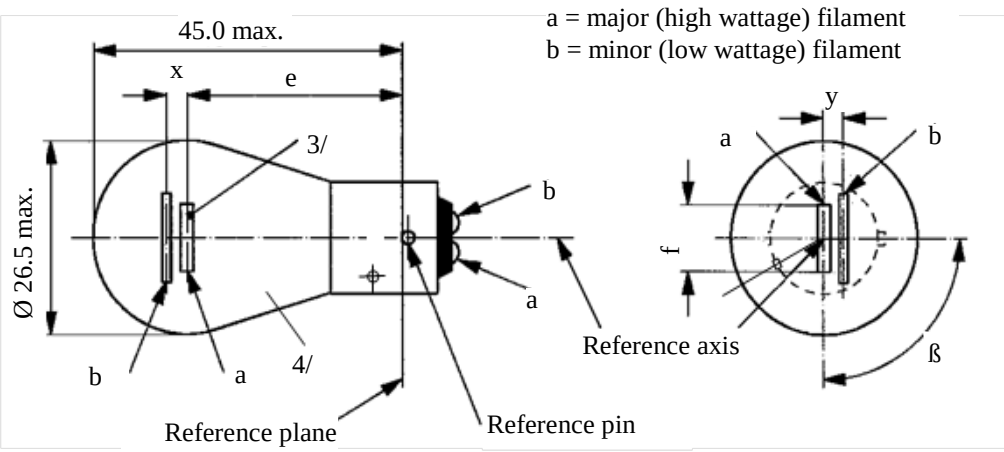

Dimensions in mm		*Filament light sources of normal production* [4/]			*Standard filament light source* [5/]
		Min.	*Nom.*	*Max.*	
e	12 V		31.8 [1/]		31.8 ± 0.3
	24 V	30.8	31.8	32.8	
f	12 V			7.0	7.0 + 0 / -2
Lateral deviation [2/]	12 V			[1/]	0.3 max.
	24 V			1.5	
x, y	12 V		[1/]		2.8 ± 0.3
x	24 V [3/]	-1.0	0	1.0	
y	24 V [3/]	1.8	2.8	3.8	
β		75°	90°	105°	90° ± 5°
Cap BAW15d in accordance with IEC Publication 60061 (sheet 7004-11E-1)					
Electrical and photometric characteristics					
Rated values	Volts	12		24	12
	Watts	21	5	21	5	21/5
Test voltage	Volts	13.5		28.0	13.5
Objective values	Watts	26.5 max.	6.6 max.	29.7 max.	11.0 max.	26.5 and 6.6 max.
	Luminous flux	105	8	105	10	
	± %	20	25	20	25	
Reference luminous flux at approximately 13.5 V:				White:	440 lm and 35 lm
				Red:	105 lm and 8 lm

[1/] See footnote 1/ on sheet P21/5W/2.
[2/] See footnote 2/ on sheet P21/5W/2.
[3/] See footnote 3/ on sheet P21/5W/2.
[4/] The light emitted from normal production filament light sources shall be red (see also footnote 5/).
[5/] The light emitted from standard filament light sources shall be white or red.

Category PR27/7W **Sheet PR27/7W/1**

The drawings are intended only to illustrate the essential dimensions (in mm) of the filament light source.

a = major (high wattage) filament
b = minor (low wattage) filament

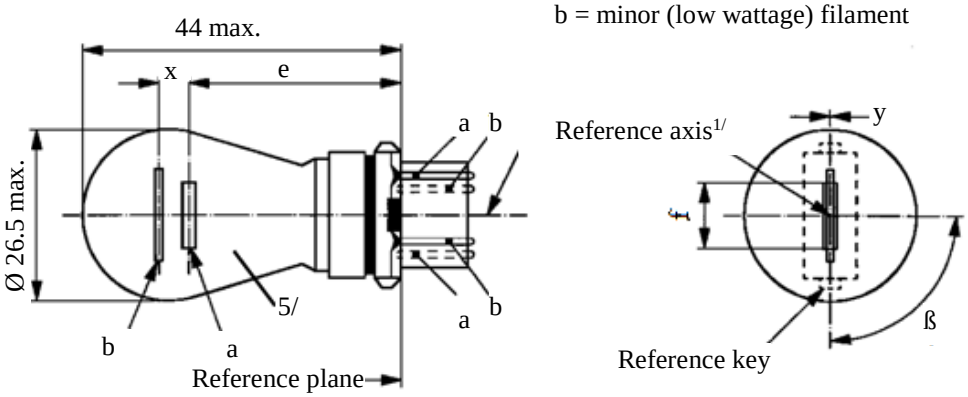

Dimensions in mm		Filament light sources of normal production			Standard filament light source 6/	
		Min.	Nom.	Max.		
e			27.9 3/		27.9 ± 0.3	
f				9.9	9.9 + 0 / -2	
Lateral deviation 2/				3/	0.0 ± 0.4	
x 4/			5.1 3/		5.1 ± 0.5	
y 4/			0.0 3/		0.0 ± 0.5	
β		75° 3/	90°	105° 3/	90° ± 5°	
Cap WU2.5x16q in accordance with IEC Publication 60061 (sheet 7004-104D-1)						
Electrical and photometric characteristics						
Rated values	Volts	12			12	
	Watts	27	7		27	7
Test voltage	Volts	13.5			13.5	
Objective values	Watts	32.1 max.	8.5 max.		32.1 max.	8.5 max.
	Luminous flux	110 ± 20 %	9 ± 20 %			
Reference luminous flux at approximately 13.5 V:					White: 475 and 36 lm Red: 110 and 9 lm	

1/ The reference axis is defined with respect to the reference keys and is perpendicular to the reference plane.
2/ Maximum lateral deviation of the major (high wattage) filament centre from two mutually perpendicular planes both containing the reference axis and one containing the axis through the reference keys.
3/ To be checked by means of a "Box system", sheets P27/7W/2 and 3.
4/ "x" and 'y" denote the offset of the axis of the minor (low wattage) filament with respect to the axis of the major (high wattage) filament.
5/ The light emitted from normal production filament light sources shall be red (see also footnote 6/).
6/ The light emitted from standard filament light sources shall be white or red.

The drawings are intended only to illustrate the essential dimensions (in mm) of the filament light source.

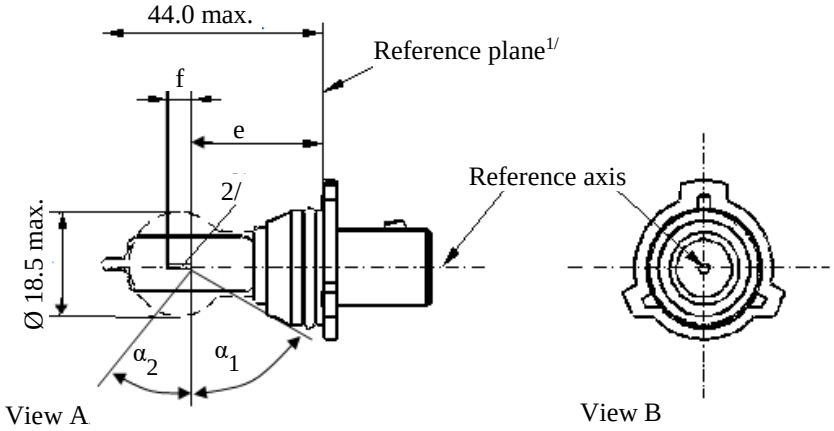

Figure 1 – Main drawing

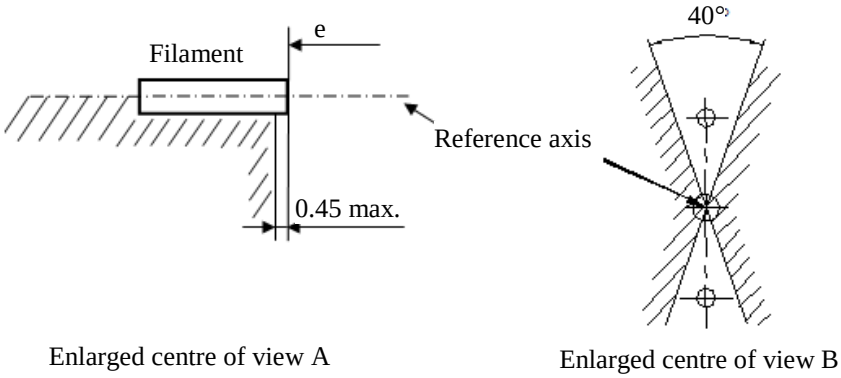

Figure 2 – Metal free zone3/

1/ The reference plane is defined by the meeting points of the cap-holder fit.

2/ No actual filament diameter restrictions apply but the objective is d max. = 1.1 mm.

3/ No opaque parts other than filament turns shall be located in the shaded area indicated in Figure 2. This applies to the rotational body within the angles $\alpha_1 + \alpha_2$.

Category PSX26W **Sheet PSX26W/2**

Dimensions in mm			*Filament light sources of normal production*	*Standard filament light source*
e [5/]			24.0 [4/]	24.0 ± 0.25
f [5/]			4.2 [4/]	4.2 ± 0.25
α_1 [6/]			35.0° min.	35.0° min.
α_2 [6/]			58.0° min.	58.0° min.
Cap PG18.5d-3 in accordance with IEC Publication 60061 (sheet 7004-147-1)				
Electrical and photometric characteristics				
Rated values	Voltage	V	12	12
	Wattage	W	26	26
Test voltage		V	13.5	13.5
Objective values	Wattage	W	26 max.	26 max.
	Luminous flux	lm	500	
		±	+10 % / -10 %	
Reference luminous flux at approximately 12 V				345 lm
Reference luminous flux at approximately 13.2 V				465 lm
Reference luminous flux at approximately 13.5 V				500 lm

4/ To be checked by means of a "Box system"; sheet PSX26W/3.

5/ The ends of the filament are defined as the points where, when the viewing direction is perpendicular to the plane through the filament lead-in wires, the projection of the outside of the end turns crosses the filament axis.

6/ No part of the cap beyond the reference plane shall interfere with angle α_2 as shown in Figure 1 on sheet PSX26W/1. The bulb shall be optically distortion free within the angles $\alpha_1 + \alpha_2$.
These requirements apply to the whole bulb circumference.

Screen projection requirements

This test is used to determine, by checking whether the filament is correctly positioned relative to the reference axis and reference plane, whether a filament light source complies with the requirements.

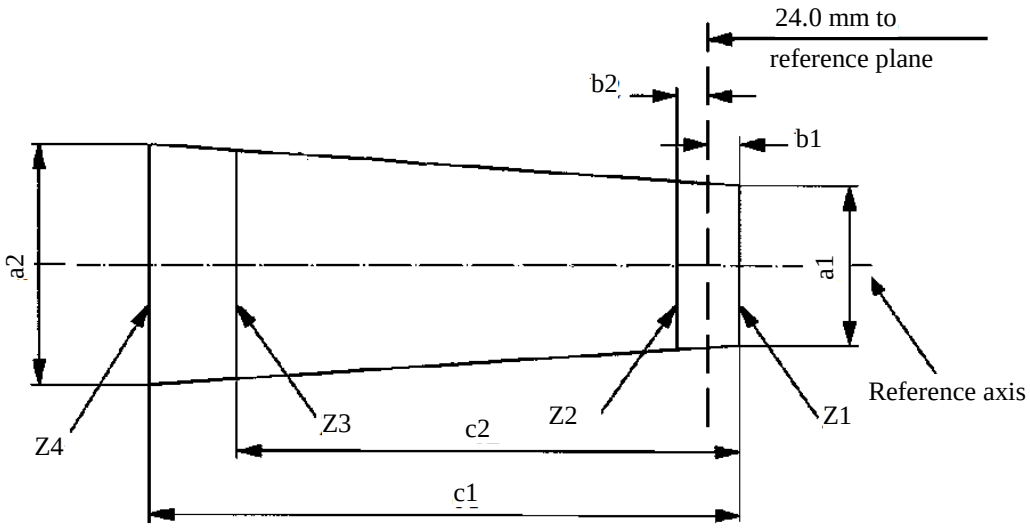

	a1	*a2*	*b1,b2*	*c1*	*c2*
Filament light sources of normal production	1.7	1.7	0.30	5.0	4.0
Standard filament light sources	1.5	1.5	0.25	4.7	4.0

The filament position is checked in two mutually perpendicular planes, one of them being the plane through the lead-in wires.

The ends of the filament as defined on sheet PSX26W/2, footnote 4/, shall lie between Z1 and Z2 and between the lines Z3 and Z4.

The filament shall lie entirely within the limits shown.

Category PY21W **Sheet PY21W/1**

The drawings are intended only to illustrate the essential dimensions (in mm) of the filament light source.

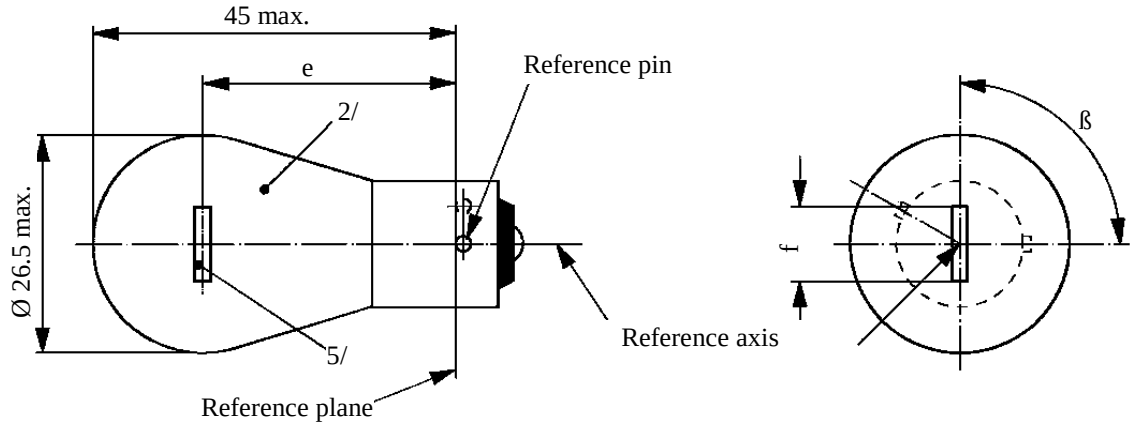

Dimensions in mm		*Filament light sources of normal production*			*Standard filament light source* [4/]
		Min.	*Nom.*	*Max.*	
e	12 V		31.8 [3/]		31.8 ± 0.3
	24 V	30.8	31.8	32.8	
f	12 V			7.0	7.0 +0 / -2
Lateral deviation [1/]	12 V			[3/]	0.3 max.
	24 V			1.5	
β		75°	90°	105°	90° ± 5°
Cap BAU15s in accordance with IEC Publication 60061 (sheet 7004-19-2)					
Electrical and photometric characteristics					
Rated values	Volts	12		24	12
	Watts	21			21
Test voltage	Volts	13.5		28.0	13.5
Objective values	Watts	26.5 max.		29.7 max.	26.5 max.
	Luminous flux	280 ± 20 %			
Reference luminous flux at approximately 13.5 V:					White: 460 lm Amber: 280 lm

1/ Maximum lateral deviation of filament centre from two mutually perpendicular planes both containing the reference axis and one containing the axis of the reference pin.

2/ The light emitted from production filament light sources shall be amber (see also footnote 4/).

3/ To be checked by means of a "Box system"; sheet P21W/2.

4/ The light emitted from standard filament light sources shall be amber or white.

5/ In this view the filament of the 24 V type may be straight or V-shaped. If it is straight, the screen projection requirements, sheet P21W/2, apply. If it is V-shaped, the filament ends shall be at the same distance within ±3 mm from the reference plane.

The drawings are intended only to illustrate the essential dimensions (in mm) of the filament light source.

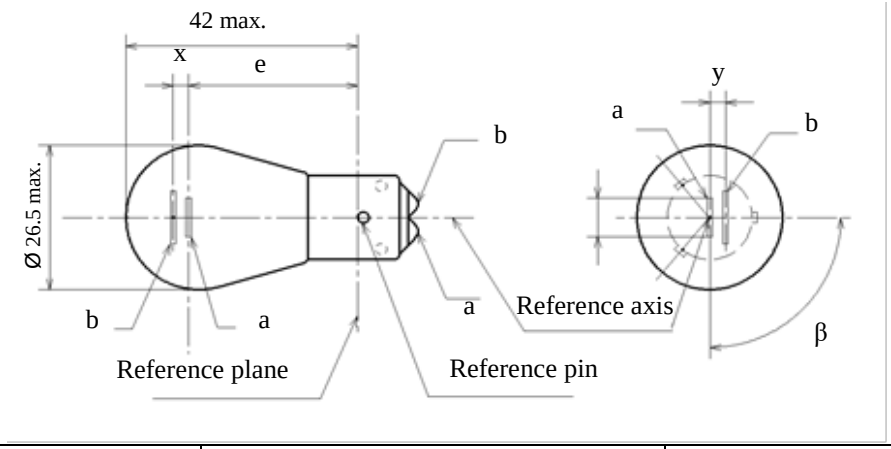

Dimensions in mm		*Filament light sources of normal production* [3/]			*Standard filament light source* [4/]
		Min.	*Nom.*	*Max.*	
e			28.6 [1/]		28.6 ± 0.3
f				7.0	7.0 + 0/- 2
Lateral deviation [2/]				[1/]	0.3 max.
x, y			[1/]		2.8 ± 0.3
β		75°	90°	105°	90° ± 5°
Cap BA15d-3 (100°/130°) in accordance with IEC Publication 60061 (sheet 7004-173-1)					
Electrical and photometric characteristics					
Rated values	Volts	12			12
	Watts	21		5	21/5
Test voltage	Volts	13.5			13.5
Objective values	Watts	26.5 max.		6.6 max.	26.5 and 6.6 max.
	Luminous flux	270		21	
	± %	20		20	
Reference luminous flux at approximately 13.5 V					White: 440 lm and 35 lm Amber: 270 lm and 21 lm

1/ These dimensions shall be checked by means of a "Box system". See sheets PY21/5W/2 and PY21/5W/3. "x" and "y" refer to the major (high wattage) filament, not to the reference axis.

2/ Maximum lateral deviation of the major (high wattage) filament centre from two mutually perpendicular planes both containing the reference axis and one containing the axis of the reference pin.

3/ The light emitted from normal production filament light sources shall be amber (see also note 4/).

4/ The light emitted from standard filament light sources shall be white or amber.

Category PY21/5W **Sheet PY21/5W/2**

Screen projection requirements

This test is used to determine, by checking whether:

(a) The major (high wattage) filament is correctly positioned relative to the reference axis and reference plane and has an axis perpendicular, within ±15°, to the plane through the centres of the pins and the reference axis; and whether

(b) The minor (low wattage) filament is correctly positioned relative to the major (high wattage) filament, whether a filament light source complies with the requirements.

Test procedure and requirements

1. The filament light source is placed in a holder capable of being rotated about its axis and having either a calibrated scale or fixed stops corresponding to the angular displacement tolerance limits. (i.e. 15°). The holder is then so rotated that an end view of the major filament is seen on the screen on which the image of the filament is projected. The end view of that filament shall be obtained within the angular displacement tolerance limits.

2. Side elevation

The filament light source placed with the cap down, the reference axis vertical, the reference pin to the right and the major filament seen end-on:

2.1. The projection of the major filament shall lie entirely within a rectangle of height "a" and width "b", having its centre at the theoretical position of the centre of the filament;

2.2. The projection of the minor filament shall lie entirely:

2.2.1. Within a rectangle of width "c" and height "d" having its centre at a distance "v" to the right of and at a distance "u" above the theoretical position of the centre of the major filament;

2.2.2. Above a straight line tangential to the upper edge of the projection of the major filament and rising from left to right at an angle of 25°.

2.2.3. To the right of the projection of the major filament

3. Front elevation

The filament light source being placed with the cap down and the reference axis vertical, the filament light source being viewed in a direction at right angles to axis of the major filament:

3.1. The projection of the major filament shall lie entirely within a rectangle of height "a" and width "h", centred on the theoretical position of the centre of the filament;

3.2. The centre of the major filament shall not be offset by more than distance "k" from the reference axis.

3.3. The centre of the minor filament axis shall not be offset from the reference axis by more than ±2 mm (±0.4 mm for standard filament light sources).

Dimensions in mm

Side elevation

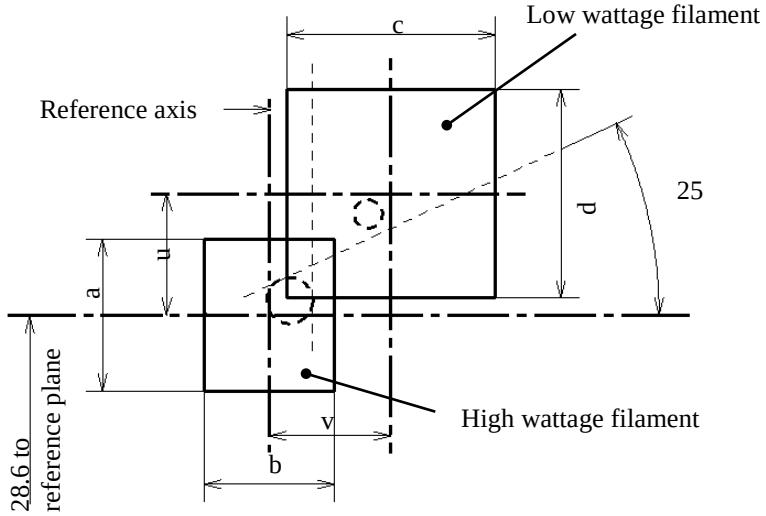

Reference	*a*	*b*	*c*	*d*	*u*	*v*
Dimensions	3.5	3.0	4.8		2.8	

Front elevation

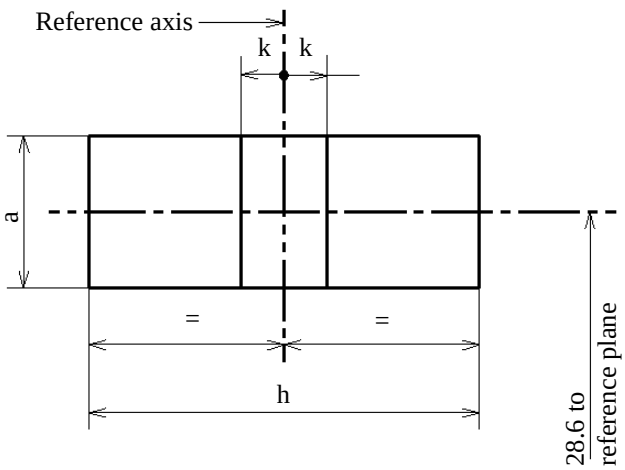

Reference	*a*	*h*	*k*
Dimensions	3.5	9.0	1.0

Category PY27/7W **Sheet PY27/7W/1**

The drawings are intended only to illustrate the essential dimensions (in mm) of the filament light source.

a = major (high wattage) filament
b = minor (low wattage) filament

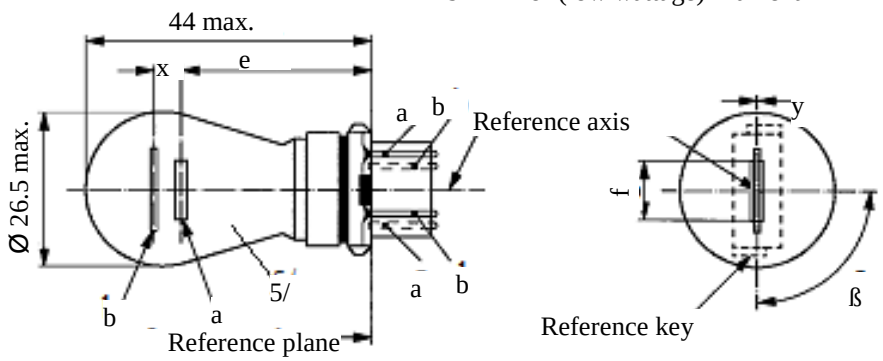

Dimensions in mm		*Filament light sources of normal production*			*Standard filament light source* [6/]	
		Min.	*Nom.*	*Max.*		
e			27.9 [3/]		27.9 ± 0.3	
f				9.9	9.9 + 0 / -2	
Lateral deviation [2/]				[3/]	0.0 ± 0.4	
x [4/]			5.1 [3/]		5.1 ± 0.5	
y [4/]			0.0 [3/]		0.0 ± 0.5	
β		75° [3/]	90°	105° [3/]	90° ± 5°	
Cap WX2.5x16q in accordance with IEC Publication 60061 (sheet 7004-104A-1)						
Electrical and photometric characteristics						
Rated values	Volts	12			12	
	Watts	27	7		27	7
Test voltage	Volts	13.5			13.5	
Objective values	Watts	32.1 max.	8.5 max.		32.1 max.	8.5 max.
	Luminous flux	280 ± 15 %	21 ± 15 %			
Reference luminous flux at approximately 13.5 V:					White: 475 and 36 lm Amber: 280 and 21 lm	

1/ The reference axis is defined with respect to the reference keys and is perpendicular to the reference plane.
2/ Maximum lateral deviation of the major (high wattage) filament centre from two mutually perpendicular planes both containing the reference axis and one containing the axis through the reference keys.
3/ To be checked by means of a "Box system", sheets P27/7W/2 and 3.
4/ "x" and 'y" denote the offset of the axis of the minor (low wattage) filament with respect to the axis of the major (high wattage) filament.
5/ The light emitted from filament light sources of normal production shall be amber (see also footnote 6/).
6/ The light emitted from standard filament light sources shall be amber or white.

The drawings are intended only to illustrate the essential dimensions (in mm) of the filament light source.

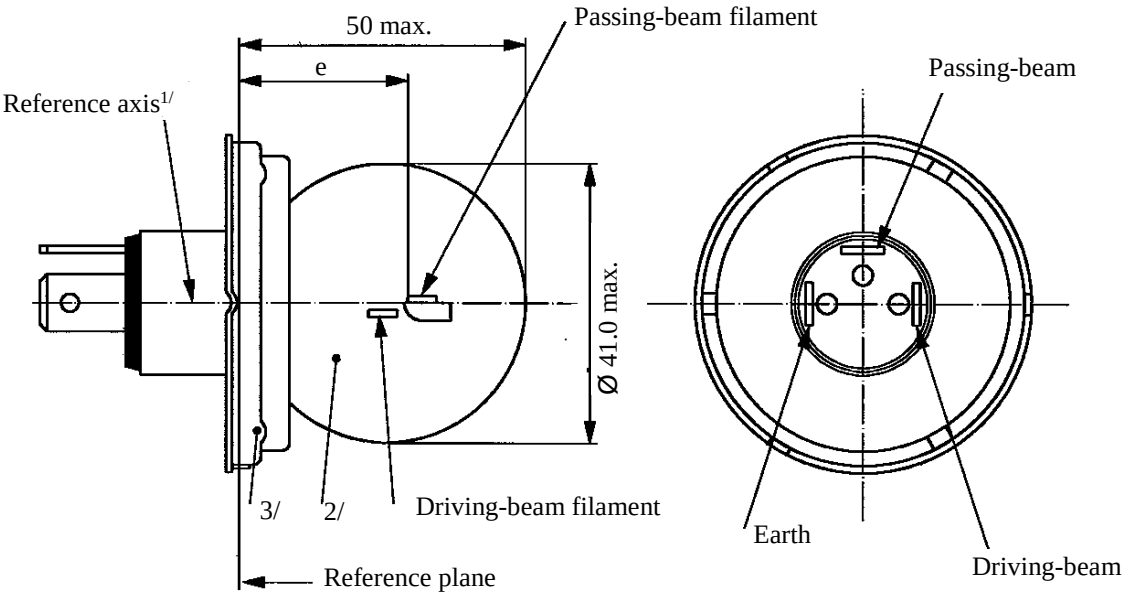

Electrical and photometric characteristics									
		Filament light sources of normal production						*Standard filament light source*	
Rated values	Volts	6 4/		12 4/		24 4/		12 4/	
	Watts	45	40	45	40	55	50	45	40
Test voltage	Volts	6.3		13.2		28.0		13.2	
Objective values	Watts	53 max.	47 max.	57 max.	51 max.	76 max.	69 max.	52 +0 % -10 %	46 ±5 %
	Luminous flux	720 min.	570 ±15 %	860 min.	675 ±15 %	1,000 min.	860 ±15 %		
Measuring flux 5/		-	450	-	450	-	450		
Reference luminous flux at approximately 12 V								700	450

1/ The reference axis is perpendicular to the reference plane and passes through the centre of the 45 mm cap diameter.

2/ The colour of the light emitted shall be white or selective-yellow.

3/ No part of the cap shall, by reflection of light emitted by the passing-beam filament, throw any stray rising ray when the filament light source is in the normal operating position on the vehicle.

4/ The values indicated on the left and on the right refer to the driving-beam filament and the passing-beam filament respectively.

5/ Measuring luminous flux according to the provisions for filament light sources with an internal shield to produce the cut-off.

Category R2 **Sheet R2/2**

Position and dimensions (in mm) of shield and filaments

The drawings are not mandatory with respect to the design of the shield and filaments.

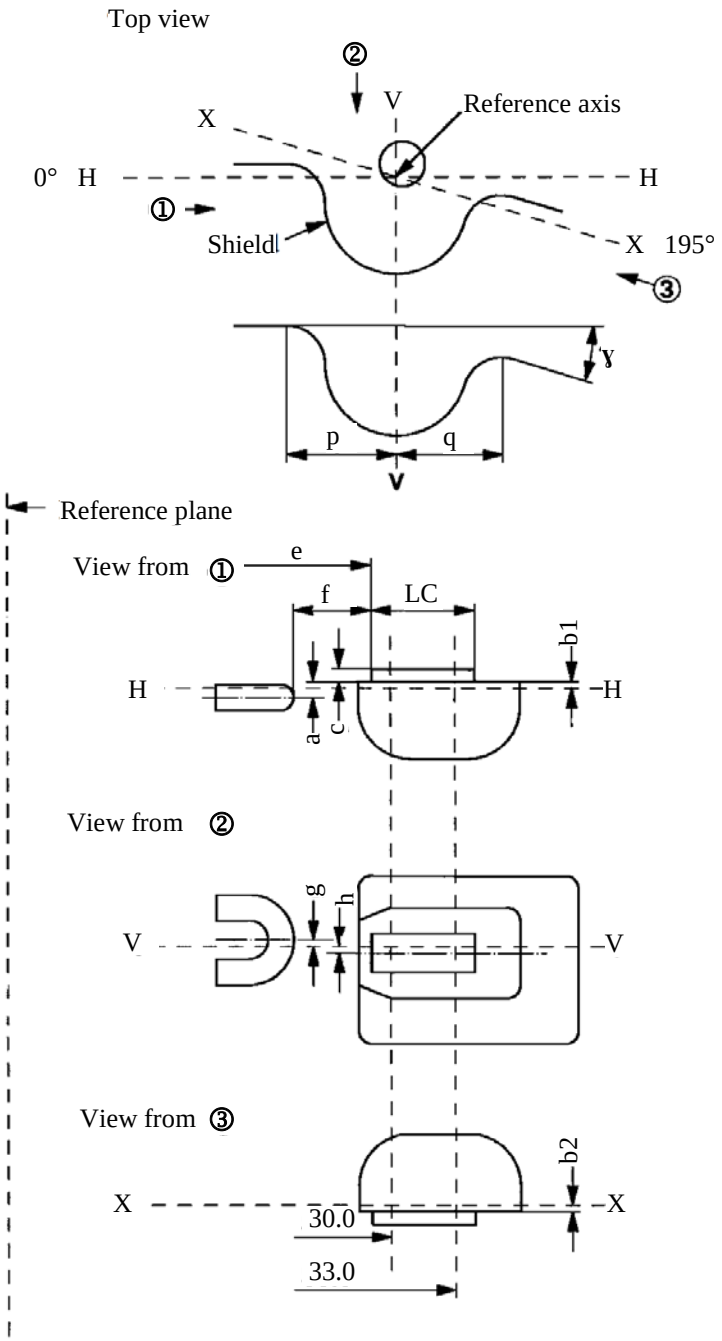

Filaments and shield position and dimensions [1/]				
			Tolerance	
			Filament light sources of normal production	*Standard filament light source*
Dimensions in mm			*6 V 12 V 24 V*	*12 V*
a		0.60	±0.35	±0.15
b1/30.0 [2/] b1/33.0		0.20 b1/30.0 mv [3/]	±0.35	±0.15
b2/30.0 [2/] b2/33.0		0.20 b2/30.0 mv [3/]	±0.35	±0.15
c/30.0 [2/] c/33.0		0.50 c/30.0 mv [3/]	±0.30	±0.15
e	6, 12 V 24 V	28.5 28.8	±0.35	±0.15
f	6, 12 V 24 V	1.8 2.2	±0.40	±0.20
g		0	±0.50	±0.30
h/30.0 [2/] h/33.0		0 h/30.0 mv [3/]	±0.50	±0.30
1/2(p-q)		0	±0.60	±0.30
I_C		5.5	±1.50	±0.50
γ [4/]		15° nom.		
Cap P45t-41 in accordance with IEC Publication 60061 (sheet 7004-95-5)				

[1/] The position and dimensions of the shield and filaments shall be checked by means of the method of measurement as described in IEC Publication 60809.

[2/] To be measured at the distance from the reference plane indicated in millimetres behind the stroke.

[3/] mv = measured value.

[4/] The angle γ is only for shield design and has not to be checked on finished filament light sources.

Category R5W and RR5W **Sheet R5W/1**

The drawings are intended only to illustrate the essential dimensions (in mm) of the filament light source.

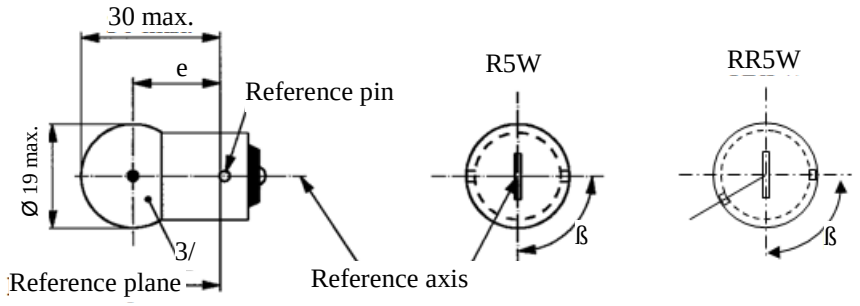

Dimensions in mm			*Filament light sources of normal production*			*Standard filament light source* [4/]
			Min.	*Nom.*	*Max.*	
e			17.5	19.0	20.5	19.0 ± 0.3
Lateral deviation [2/]					1.5	0.3 max.
β			60°	90°	120°	90° ± 5°
Cap:	R5W: BA15s RR5W: BAW15s		in accordance with IEC Publication 60061			(sheet 7004-11A-9) [1/] (sheet 7004-11E-1)
Electrical and photometric characteristics						
Rated values		Volts	6 [5/]	12	24	12
		Watts	5			5
Test voltage		Volts	6.75	13.5	28.0	13.5
Objective values	Watts		5.5 max.		7.7 max.	5.5 max.
	Luminous flux	R5W	50 ± 20 %			
		RR5W	[5/]	12 ± 25 %		
Reference luminous flux at approximately 13.5 V:						White: 50 lm Red: 12 lm

1/ Filament light sources with cap BA15d may be used for special purposes; they have the same dimensions.

2/ Maximum lateral deviation of filament centre from two mutually perpendicular planes both containing the reference axis and one containing the axis of the reference pin.

3/ The light emitted from filament light sources of normal production shall be white for category R5W and red for category RR5W (see also footnote 4/).

4/ The light emitted from standard filament light sources shall be white for category R5W; white or red for category RR5W.

5/ Within RR5W no 6 V rated voltage type specified.

The drawings are intended only to illustrate the essential dimensions (in mm) of the filament light source.

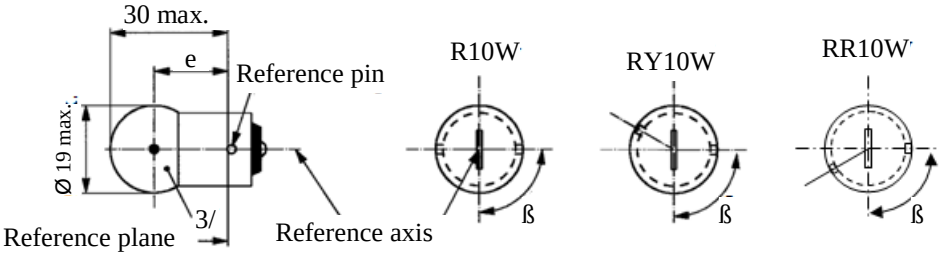

Dimensions in mm			*Filament light sources of normal production*			*Standard filament light source* [4/]
			Min.	*Nom.*	*Max.*	
e			17.5	19.0	20.5	19.0 ± 0.3
Lateral deviation [2/]					1.5	0.3 max.
β			60°	90°	120°	90° ± 5°
Cap	R10W:	BA15s	in accordance with IEC Publication 60061			(sheet 7004-11A-9) [1/]
	RY10W:	BAU15s				(sheet 7004-19-2)
	RR10W:	BAW15s				(sheet 7004-11E-1)
Electrical and photometric characteristics						
Rated values		Volts	6 [5/]	12	24	12
		Watts	10			10
Test voltage		Volts	6.75	13.5	28	13.5
Objective values	Watts	R10W RY10W	11 max.		14 max.	11 max.
		RR10W	[5/]	11 max.		11 max.
	Luminous flux	R10W	125 ± 20 %			
		RY10W	75 ± 20 %			
		RR10W	[5/]	30 ± 25 %		
Reference luminous flux at approximately 13.5 V:						White: 125 lm Amber: 75 lm Red: 30 lm

1/ Filament light sources R10W with cap BA15d may be used for special purposes; they have the same dimensions.

2/ Maximum lateral deviation of filament centre from two mutually perpendicular planes both containing the reference axis and one containing the axis of the reference pin.

3/ The light emitted from filament light sources of normal production shall be white for category R10W, amber for category RY10W and red for category RR10W (see also footnote 4/)

4/ The light emitted from standard filament light sources shall be white for category R10W; white or amber for category RY10W; white or red for category RR10W.

5/ Within RR10W no 6 V rated voltage type specified.

Categories S1 and S2 **Sheet S1/S2/1**

The drawings are intended only to illustrate the essential dimensions (in mm) of the filament light source.

Filament lamps for motorcycles

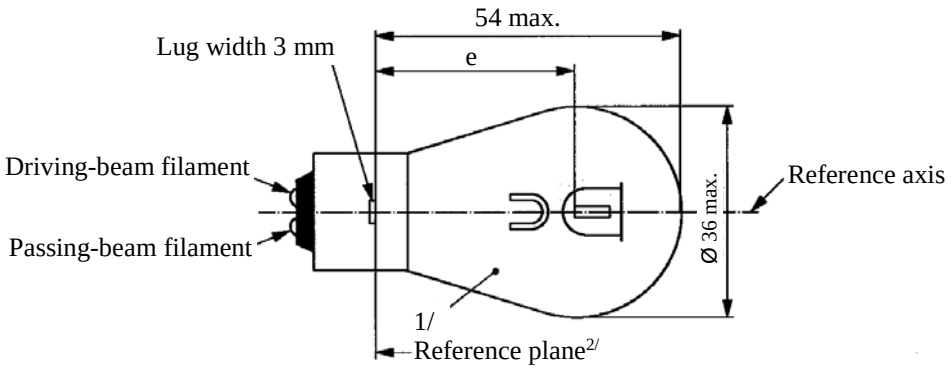

Position and dimensions of filaments

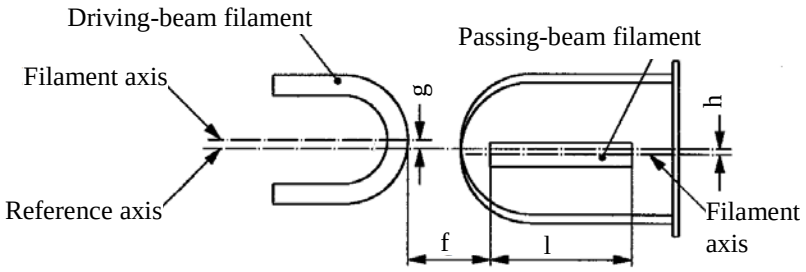

Position of shield3/,4/

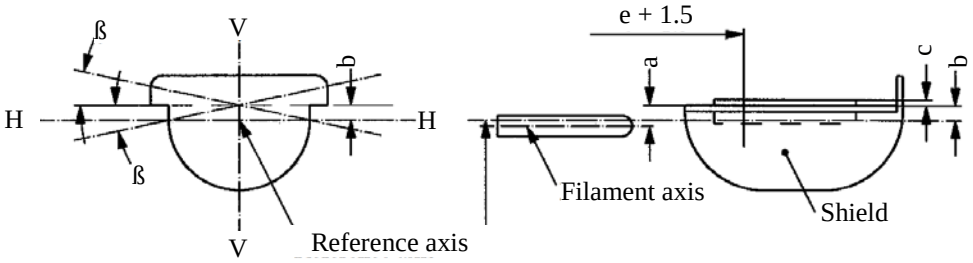

1/ The colour of the light emitted shall be white or selective-yellow.

2/ The reference plane is perpendicular to the reference axis and touches the upper surface of the lug having a width of 4.5 mm.

3/ Plane V-V contains the reference axis and the centre line of the lugs.

4/ Plane H-H (the normal position of the shield) is perpendicular to plane V-V and contains the reference axis.

Dimensions in mm	*Filament light sources of normal production*			*Standard filament light source*
	Min.	*Nom.*	*Max.*	
e	32.35	32.70	33.05	32.7 ± 0.15
f	1.4	1.8	2.2	1.8 ± 0.2
l	4.0	5.5	7.0	5.5 ± 0.5
c [5/]	0.2	0.5	0.8	0.5 ± 0.15
b [5/]	-0.15	0.2	0.55	0.2 ± 0.15
a [5/]	0.25	0.6	0.95	0.6 ± 0.15
h	-0.5	0	0.5	0 ± 0.2
g	-0.5	0	0.5	0 ± 0.2
β [5/, 6/]	-2°30'	0°	+2°30'	0° ± 1°
Cap BA20d in accordance with IEC Publication 60061 (sheet 7004-12-7)				
Electrical and photometric characteristics				

Rated values	Volts	S1	6 [7/]		12 [7/]		6	
		S2					12	
	Watts	S1	25	25	25	25	25	25
		S2	35	35	35	35	35	35
Test voltage	Volts	S1	6.75		13.5		6.75	
		S2	6.3		13.5		13.5	
Objective values	Watts	S1	25 ± 5 %	25 ± 5 %	25 ± 5 %	25 ± 5 %	25 ± 5 %	25 ± 5 %
		S2	35 ± 5 %	35 ± 5 %	35 ± 5 %	35 ± 5 %	35 ± 5 %	35 ± 5 %
	Luminous flux	S1	435 ± 20 %	315 ± 20 %	435 ± 20 %	315 ± 20 %		
		S2	650 ± 20 %	465 ± 20 %	650 ± 20 %	465 ± 20 %		
Reference luminous flux		S1	at approximately			6 V	398	284
		S2	at approximately			12 V	568	426
						13.2 V	634	457
						13.5 V	650	465

[5/] Dimensions a, b, c and β refer to a plane parallel to the reference plane and cutting the two edges of the shield at a distance of e + 1.5 mm.

[6/] Admissible angular deviation of the shield plane position from the normal position.

[7/] Values in the left-hand column refer to the driving-beam filament. Values in the right-hand column to the passing-beam filament.

Category S3 **Sheet S3/1**

The drawings are intended only to illustrate the essential dimensions (in mm) of the filament light source.

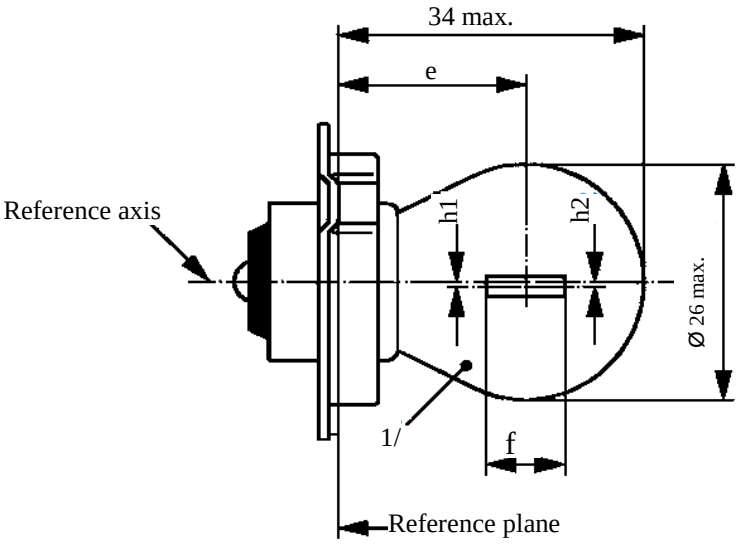

Dimensions in mm		*Filament light sources of normal production*			*Standard filament light source*
		Min.	*Nom.*	*Max.*	
e [2/]		19.0	19.5	20.0	19.5 ± 0.25
f	6 V			3.0	2.5 ± 0.5
	12 V			4.0	
h1, h2 [3/]		-0.5	0	0.5	0 ± 0.3
Cap P26s in accordance with IEC Publication 60061 (sheet 7004-36-1)					
Electrical and photometric characteristics					
Rated values	Volts	6	12		6
	Watts	15			15
Test voltage	Volts	6.75	13.5		6.75
Objective values	Watts	15 ± 6 %			15 ± 6 %
	Luminous flux	240 ± 15 %			
Reference luminous flux: 240 lm at approximately 6.75 V					

1/ The colour of the light emitted shall be white or selective-yellow.
2/ Distance related to the luminous centre.
3/ Lateral deviation of filament axis with respect to the reference axis. It is sufficient to check this deviation in two mutually perpendicular planes.

The drawings are intended only to illustrate the essential dimensions (in mm) of the filament light source.

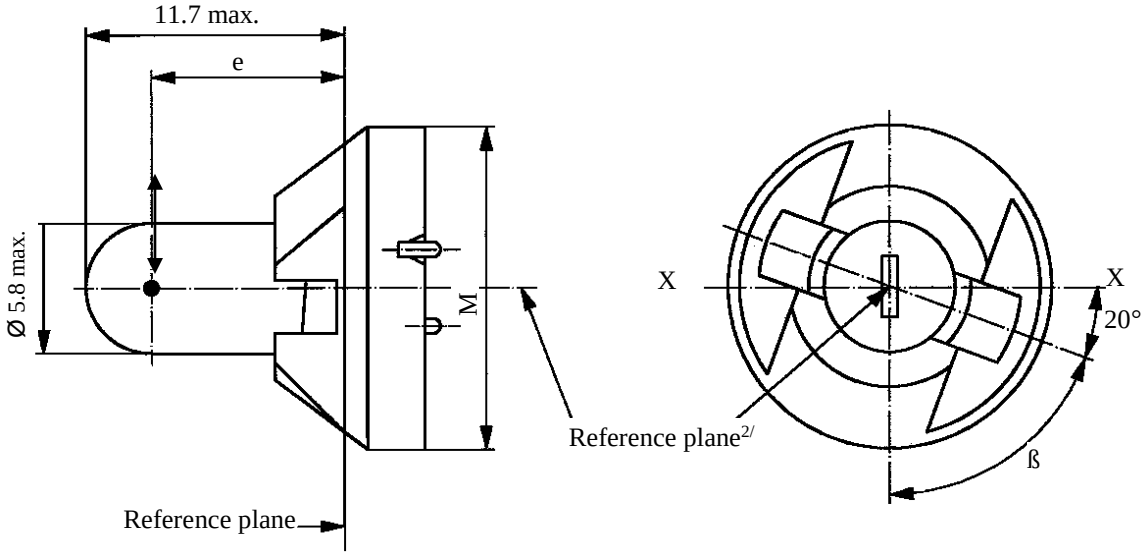

Dimensions in mm		*Filament light sources of normal production*			*Standard filament light source*
		Min.	*Nom.*	*Max.*	
e		7.6	8.3	9.0	8.3 ± 0.35
Lateral deviation 1/				0.7	0.35 max
β		55°	70°	85°	70° ± 5°
Cap P11.5d in accordance with IEC Publication 60061 (sheet 7004-79-1)					
Electrical and photometric characteristics					
Rated values	Volts	12			12
	Watts	1.4			1.4
Test voltage	Volts	13.5			13.5
Objective values	Watts	1.54 max.			1.54 max.
	Luminous flux	8 ± 15 %			
Reference luminous flux: 8 lm at approximately 13.5 V					

1/ Maximum lateral deviation of filament centre from two mutually perpendicular planes both containing the reference axis and one containing axis X-X.

2/ The reference axis is perpendicular to the reference plane and passes through the centre of the circle of diameter "M".

Category T4W **Sheet T4W/1**

The drawings are intended only to illustrate the essential dimensions (in mm) of the filament light source.

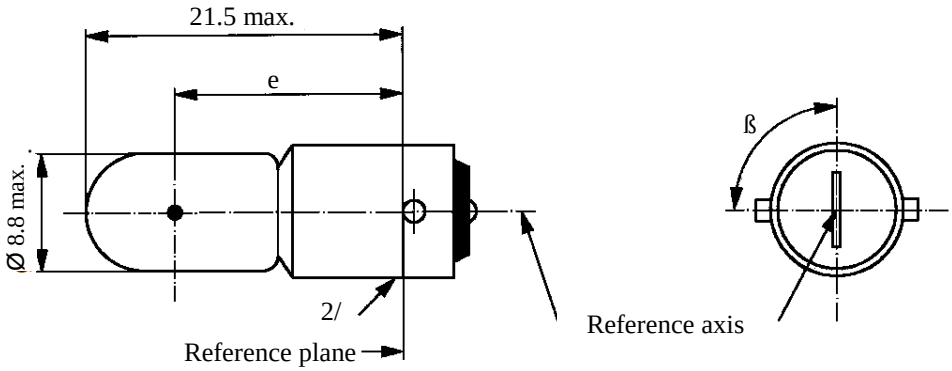

Dimensions in mm		*Filament light sources of normal production*			*Standard filament light source*
		Min.	*Nom.*	*Max.*	
e		13.5	15.0	16.5	15.0 ± 0.3
Lateral deviation [1/]				1.5	0.5 max
β			90°		90° ± 5°
Cap BA9s in accordance with IEC Publication 60061 (sheet 7004-14-9)					
Electrical and photometric characteristics					
Rated values	Volts	6	12	24	12
	Watts	4			4
Test voltage	Volts	6.75	13.5	28.0	13.5
Objective values	Watts	4.4 max.		5.5 max.	4.4 max.
	Luminous flux	35 ± 20 %			
Reference luminous flux: 35 lm at approximately 13.5 V					

[1/] Maximum lateral deviation of filament centre from two mutually perpendicular planes both containing the reference axis and one containing the axis of pins.

[2/] Over the entire length of the cap there shall be no projections or soldering extending beyond the permissible maximum diameter of the cap.

The drawings are intended only to illustrate the essential dimensions (in mm) of the filament light source.

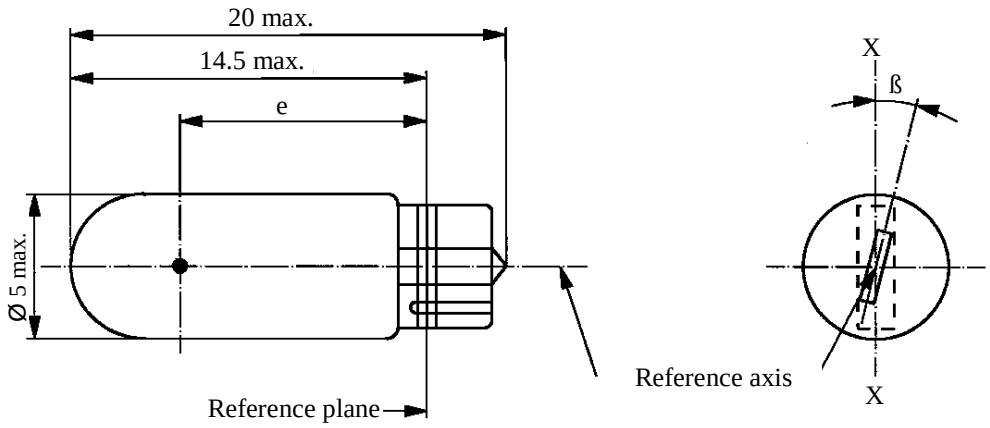

Dimensions in mm		*Filament light sources of normal production*			*Standard filament light source*
		Min.	*Nom.*	*Max.*	
e		10.3	10.8	11.3	10.8 ± 0.3
Lateral deviation [1/]				1.0	0.5 max
β		-15°	0°	+15°	0° ± 5°
Cap W2x4.6d in accordance with IEC Publication 60061 (sheet 7004-94-2)					
Electrical and photometric characteristics					
Rated values	Volts	12			12
	Watts	2.3			2.3
Test voltage	Volts	13.5			13.5
Objective values	Watts	2.5 max.			2.5 max.
	Luminous flux	18.6 ± 20 %			
Reference luminous flux: 18.6 lm at approximately 13.5 V					

[1/] Maximum lateral deviation of filament centre from two mutually perpendicular planes both containing the reference axis and one containing axis X-X.

Category W3W **Sheet W3W/1**

The drawings are intended only to illustrate the essential dimensions (in mm) of the filament light source.

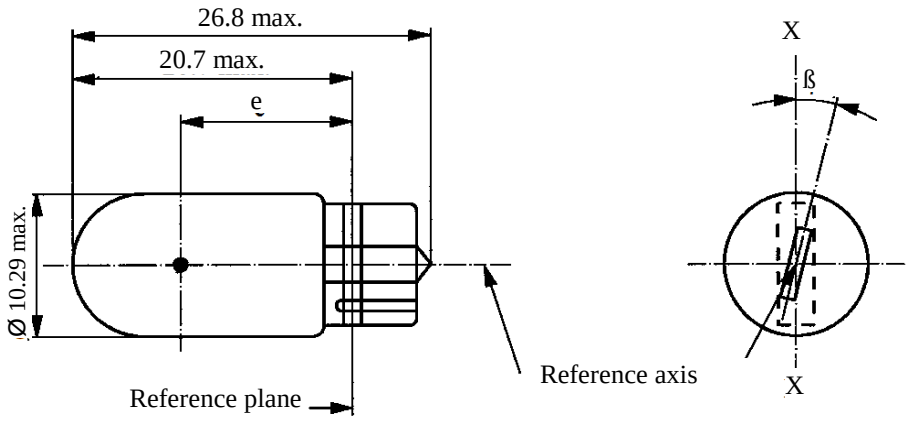

Dimensions in mm		*Filament light sources of normal production*			*Standard filament light source*
		Min.	*Nom.*	*Max.*	
e		11.2	12.7.0	14.2	12.7 ± 0.3
Lateral deviation [1/]				1.5	0.5 max
β		-15°	0°	+15°	0° ± 5°
Cap W2.1x9.5d in accordance with IEC Publication 60061 (sheet 7004-91-3)					
Electrical and photometric characteristics					
Rated values	Volts	6	12	24	12
	Watts	3			3
Test voltage	Volts	6.75	13.5	28.0	13.5
Objective values	Watts	3.45 max.		4.6 max.	3.45 max.
	Luminous flux	22 ± 30 %			
Reference luminous flux: 22 lm at approximately 13.5 V					

[1/] Maximum lateral deviation of filament centre from two mutually perpendicular planes both containing the reference axis and one containing axis X-X.

The drawings are intended only to illustrate the essential dimensions (in mm) of the filament light source.

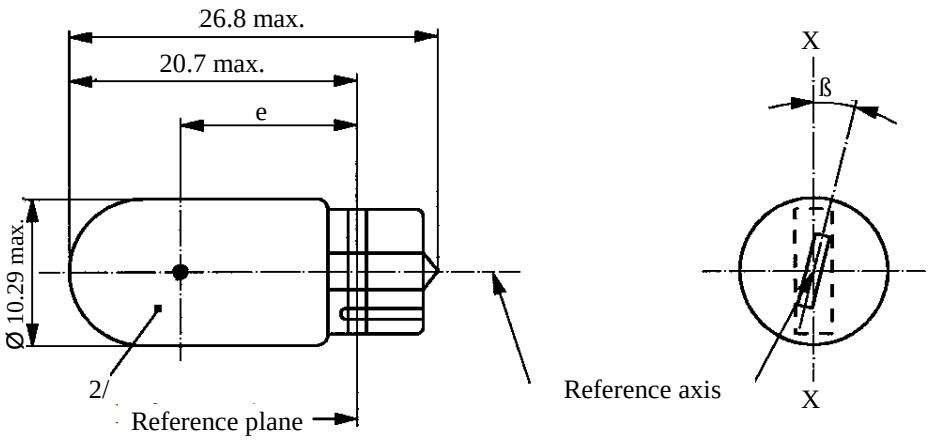

Dimensions in mm			*Filament light sources of normal production*			*Standard filament light source* [3/]
			Min.	*Nom.*	*Max.*	
e			11.2	12.7	14.2	12.7 ± 0.3
Lateral deviation [1/]					1.5	0.5 max.
β			-15°	0°	+15°	0° ± 5°
Cap W2.1x9.5d in accordance with IEC Publication 60061 (sheet 7004-91-3)						
Electrical and photometric characteristics						
Rated values		Volts	6 [4/]	12	24	12
		Watts	5			5
Test voltage		Volts	6.75	13.5	28.0	13.5
Objective values	Watts		5.5 max.		7.7 max.	5.5 max.
	Luminous flux	W5W	50 ± 20 %			
		WY5W	30 ± 20 %			
		WR5W	[4/]	12 ± 25 %		
Reference luminous flux at approximately 13.5 V:						White: 50 lm Amber: 30 lm Red: 12 lm

1/ Maximum lateral deviation of filament centre from two mutually perpendicular planes both containing the reference axis and one containing axis X-X.

2/ The light emitted from filament light sources of normal production shall be white for category W5W, amber for category WY5W and red for category WR5W (see also footnote 3/)

3/ The light emitted from standard filament light sources shall be white for category W5W; white or amber for category WY5W; white or red for category WR5W.

4/ Within WR5W no 6 V rated voltage type specified.

Categories W10W and WY10W **Sheet W10W/1**

The drawings are intended only to illustrate the essential dimensions (in mm) of the filament light source.

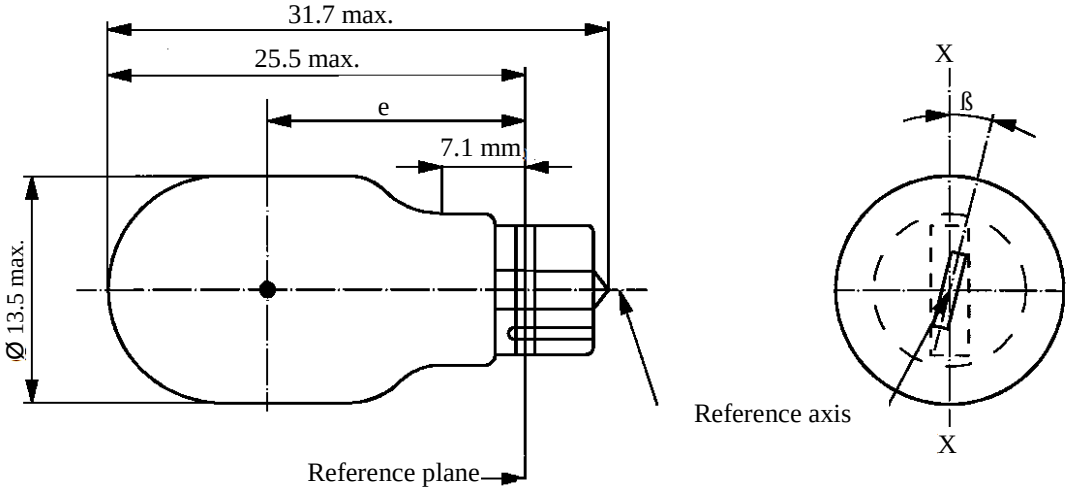

Dimensions in mm			*Filament light sources of normal production*			*Standard filament light source*
			Min.	*Nom.*	*Max.*	
e			15.5	17.0	18.5	17.0 ± 0.3
Lateral deviation [1/]					1.0	0.5 max.
β			-15°	0°	+15°	0° ± 5°
Cap W2.1x9.5d in accordance with IEC Publication 60061 (sheet 7004-91-3)						
Electrical and photometric characteristics						
Rated values	Volts		6		12	12
	Watts		10			10
Test voltage	Volts		6.75		13.5	13.5
Objective values	Watts		11 max.			11 max.
	Luminous flux	White	125 ± 20 %			
		Amber	75 ± 20 %			
Reference luminous flux at approximately 13.5 V:						White: 125 lm Amber: 75 lm

[1/] Maximum lateral deviation of filament centre from two mutually perpendicular planes both containing the reference axis and one containing axis X-X.

The drawings are intended only to illustrate the essential dimensions (in mm) of the filament light source.

a = major (high wattage) filament
b = minor (low wattage) filament

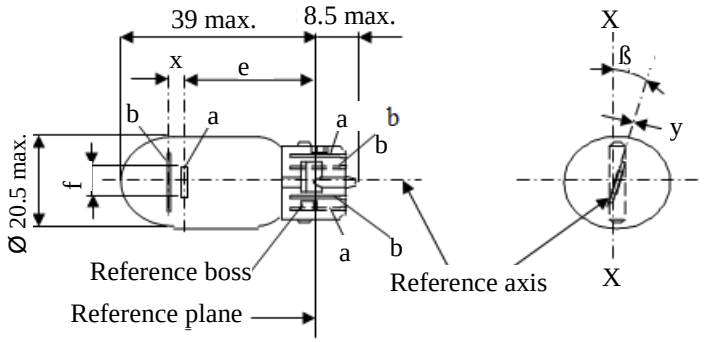

Dimensions in mm		Filament light sources of normal production			Standard filament light source	
		Min.	*Nom.*	*Max.*		
e			25.0 [1/]		25.0 ± 0.3	
f				7.5	7.5 + 0 / -2	
Lateral deviation [2/]				[1/]	0.3 max.	
x [3/]			2.8 [1/]		2.8 ± 0.3	
y [3/]			0.0 [1/]		0.0 ± 0.3	
β		-15° [1/]	0°	+15° [1/]	0° ± 5°	
Cap WZ3x16q in accordance with IEC Publication 60061 (sheet 7004-151-2)						
Electrical and photometric characteristics						
Rated values	Volts	12			12	
	Watts	15	5		15	5
Test voltage	Volts	13.5			13.5	
Objective values	Watts	19.1 max.	6.6 max.		19.1 max.	6.6 max.
	Luminous flux	280 ± 15 %	35 ± 20 %			
Reference luminous flux: 280 lm and 35 lm at approximately 13.5 V						

[1/] To be checked by means of a "Box system"; sheets W15/5W/2 and 3.
[2/] Maximum lateral deviation of filament centre from two mutually perpendicular planes both containing the reference axis and one containing axis X-X.
[3/] "x" and "y" denote the offset of the axis of the minor filament with respect to the axis of the major filament.

Screen projection requirements

This test is used to determine, by checking whether:

(a) The major filament is correctly positioned relative to the reference axis and reference plane and has an axis perpendicular, within ±15°, to the plane through the axis X-X and the reference axis; and whether:

(b) The minor filament is correctly positioned relative to the major filament, whether a filament light source complies with the requirements.

Test procedure and requirements.

1. The filament light source is placed in a holder capable of being rotated about its axis and having either a calibrated scale or fixed stops corresponding to the angular displacement tolerance limits. The holder is then so rotated that an end view of the major filament is seen on the screen on which the image of the filament is projected. The end view of that filament shall be obtained within the angular displacement tolerance limits. (±15°).

2. Side elevation

The filament light source placed with the cap down, the reference axis vertical and the major filament seen end-on:

2.1. The projection of the major filament shall lie entirely within a rectangle of height "a" and width "b", having its centre at the theoretical position of the centre of the filament;

2.2. The projection of the minor filament shall lie entirely within a rectangle of width "c" and height "d" having its centre at a distance "u" above the theoretical position of the centre of the major filament.

3. Front elevation

The filament light source being placed with the cap down and the reference axis vertical, the filament light source being viewed in a direction at right angles to axis of the major filament:

3.1. The projection of the major filament shall lie entirely within a rectangle of height "a" and width "h", centred on the theoretical position of the centre of the filament;

3.2. The centre of the major filament shall not be offset by more than distance "k" from the reference axis.

3.3. The centre of the minor filament axis shall not be offset from the reference axis by more than ±2 mm (±0.4 mm for standard filament light sources).

Side elevation

Dimensions in millimeters

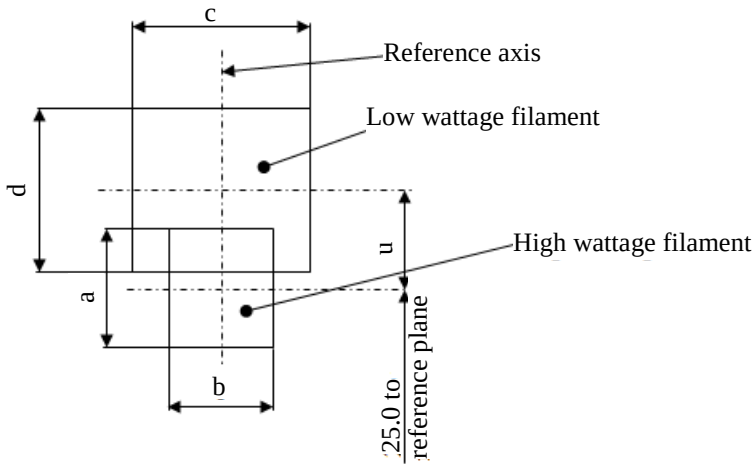

Reference	*a*	*b*	*c*	*d*	*u*
Dimensions	3.3	2.8	4.8		2.8

Front elevation

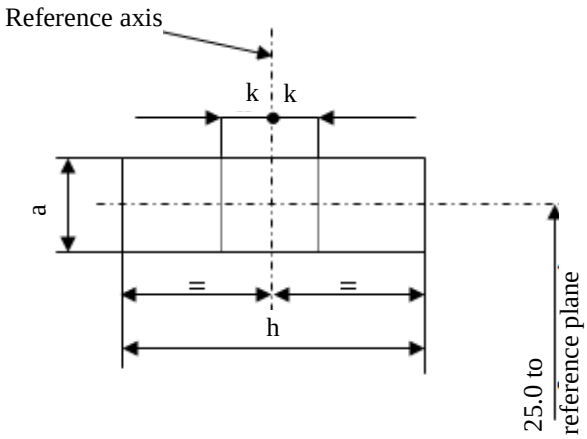

Reference	*a*	*h*	*k*
Dimensions	3.3	9.5	1.0

Categories W16W AND WY16W **Sheet W16W/1**

The drawings are intended only to illustrate the essential dimensions (in mm) of the filament light source.

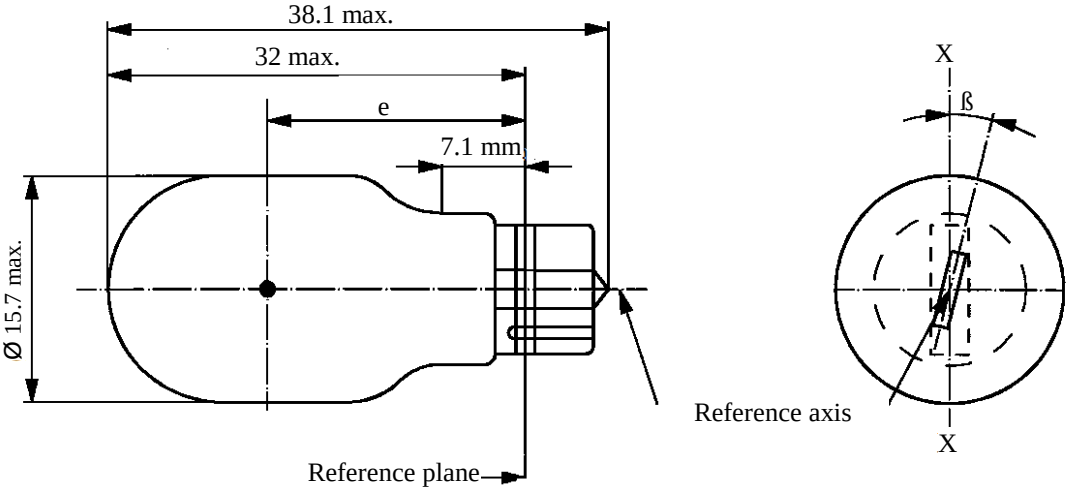

Dimensions in mm			*Filament light sources of normal production*			*Standard filament light source*
			Min.	*Nom.*	*Max.*	
e			18.3	20.6	22.9	20.6 ± 0.3
Lateral deviation [1/]					1.0	0.5 max.
β			-15°	0°	+15°	0° ± 5°
Cap W2.1x9.5d in accordance with IEC Publication 60061 (sheet 7004-91-3)						
Electrical and photometric characteristics						
Rated values	Volts		12			12
	Watts		16			16
Test voltage	Volts		13.5			13.5
Objective values	Watts		21.35 max.			21.35 max.
	Luminous flux	White	310 ± 20 %			
		Amber	190 ± 20 %			
Reference luminous flux at approximately 13.5 V:						White: 310 lm Amber: 190 lm

[1/] Maximum lateral deviation of filament centre from two mutually perpendicular planes both containing the reference axis and one containing axis X-X.

The drawings are intended only to illustrate the essential dimensions (in mm) of the filament light source.

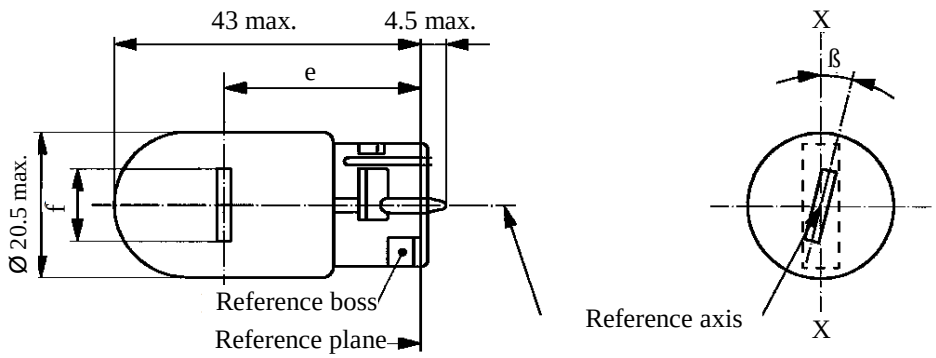

Dimensions in mm		*Filament light sources of normal production*			*Standard filament light source*
		Min.	*Nom.*	*Max.*	
e			29.0 [2/]		29.0 ± 0.3
f				7.5	7.5 + 0 / -2
Lateral deviation [1/]				[2/]	0.5 max.
β		-15° [2/]	0°	+15° [2/]	0° ± 5°
Cap W3x16d in accordance with IEC Publication 60061 (sheet 7004-105-3)					
Electrical and photometric characteristics					
Rated values	Volts	12			12
	Watts	21			21
Test voltage	Volts	13.5			13.5
Objective values	Watts	26.5 max.			26.5 max.
	Luminous flux	460 ± 15 %			
Reference luminous flux: 460 lm at approximately 13.5 V					

[1/] Maximum lateral deviation of filament centre from two mutually perpendicular planes both containing the reference axis and one containing axis X-X.

[2/] To be checked by means of a "Box system"; see sheet W21W/2.

Category W21W **Sheet W21W/2**

Screen projection requirements

This test is used to determine, by checking whether the filament is correctly positioned relative to the reference axis and reference plane and has an axis perpendicular, within ±15°, to the plane through the axis X-X and the reference axis, whether a filament light source complies with the requirements.

Side elevation Front elevation

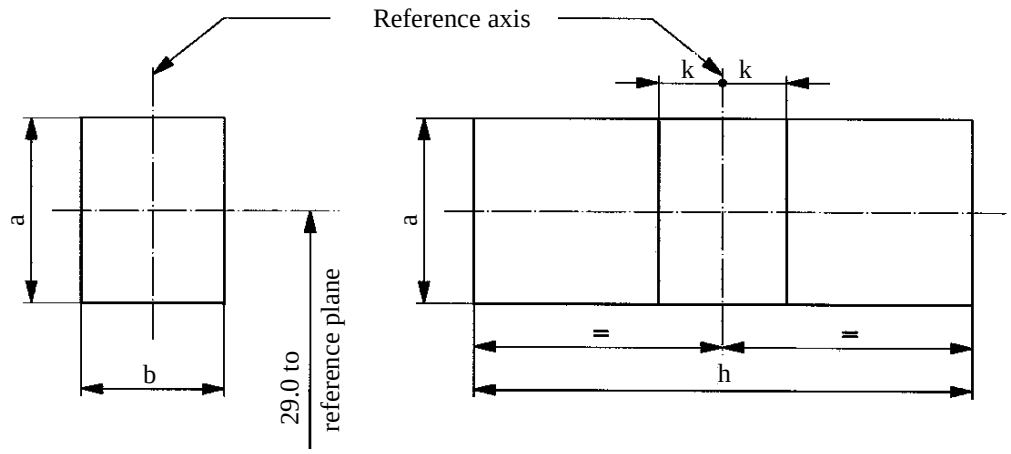

Reference	*a*	*b*	*h*	*k*
Dimension	3.5	3.0	9.5	1.0

Test procedures and requirements

1. The filament light source is placed in a holder capable of being rotated about its axis and having either a calibrated scale or fixed stops corresponding to the angular displacement tolerance limits, i.e. ±15°. The holder is then so rotated that an end view of the filament is seen on the screen on to which the image of the filament is projected. The end view of the filament shall be obtained within the angular displacements tolerance limits (±15°).

2. Side elevation

   The filament light source placed with the cap down, the reference axis vertical and the filament seen end-on, the projection of the filament shall lie entirely within a rectangle of height "a" and width "b", having its centre at the theoretical position of the centre of the filament.

3. Front elevation

   The filament light source placed with the cap down and the reference axis vertical, the filament light source being viewed in a direction at right angles to the filament axis:

3.1. The projection of the filament shall lie entirely within a rectangle of height "a" and width "h", having its centre at the theoretical position of the centre of the filament;

3.2. The centre of the filament shall not be offset by more than distance "k" from the reference axis.

The drawings are intended only to illustrate the essential dimensions (in mm) of the filament light source.

a = major (high wattage) filament
b = minor (low wattage) filament

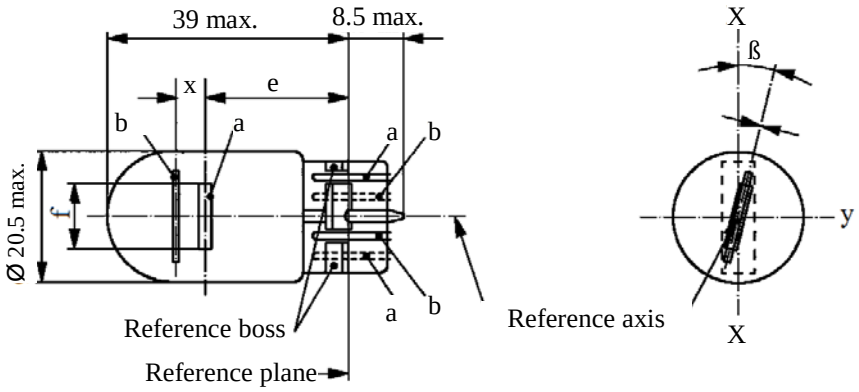

Dimensions in mm		Filament light sources of normal production			Standard filament light source	
		Min.	*Nom.*	*Max.*		
e			25.0 [1/]		25.0 ± 0.3	
f				7.5	7.5 + 0 / -2	
Lateral deviation [2/]				[1/]	0.3 max.	
x [3/]			2.8 [1/]		2.8 ± 0.3	
y [3/]			0.0 [1/]		0.0 ± 0.3	
β		-15° [1/]	0°	+15° [1/]	0° ± 5°	
Cap W3x16q in accordance with IEC Publication 60061 (sheet 7004-106-4)						
Electrical and photometric characteristics						
Rated values	Volts	12			12	
	Watts	21	5		21	5
Test voltage	Volts	13.5			13.5	
Objective values	Watts	26.5 max.	6.6 max.		26.5 max.	6.6 max.
	Luminous flux	440 ± 15 %	35 ± 20 %			
Reference luminous flux: 440 and 35 lm at approximately 13.5 V						

[1/] To be checked by means of a "Box system"; sheets W21/5W/2 and 3.
[2/] Maximum lateral deviation of filament centre from two mutually perpendicular planes both containing the reference axis and one containing axis X-X.
[3/] "x" and "y" denote the offset of the axis of the minor filament with respect to the axis of the major filament.

Screen projection requirements

This test is used to determine, by checking whether:

(a) The major filament is correctly positioned relative to the reference axis and reference plane and has an axis perpendicular, within ±15°, to the plane through the axis X-X and the reference axis; and whether:

(b) The minor filament is correctly positioned relative to the major filament, whether a filament light source complies with the requirements.

Test procedure and requirements.

1. The filament light source is placed in a holder capable of being rotated about its axis and having either a calibrated scale or fixed stops corresponding to the angular displacement tolerance limits. The holder is then so rotated that an end view of the major filament is seen on the screen on which the image of the filament is projected. The end view of that filament shall be obtained within the angular displacement tolerance limits (±15°).

2. Side elevation

The filament light source placed with the cap down, the reference axis vertical and the major filament seen end-on:

2.1. The projection of the major filament shall lie entirely within a rectangle of height "a" and width "b", having its centre at the theoretical position of the centre of the filament;

2.2. The projection of the minor filament shall lie entirely within a rectangle of width "c" and height "d" having its centre at a distance "u" above the theoretical position of the centre of the major filament.

3. Front elevation

The filament light source being placed with the cap down and the reference axis vertical, the filament light source being viewed in a direction at right angles to axis of the major filament:

3.1. The projection of the major filament shall lie entirely within a rectangle of height "a" and width "h", centred on the theoretical position of the centre of the filament;

3.2. The centre of the major filament shall not be offset by more than distance "k" from the reference axis;

3.3. The centre of the minor filament axis shall not be offset from the reference axis by more than ±2 mm (±0.4 mm for standard filament light sources).

Side elevation

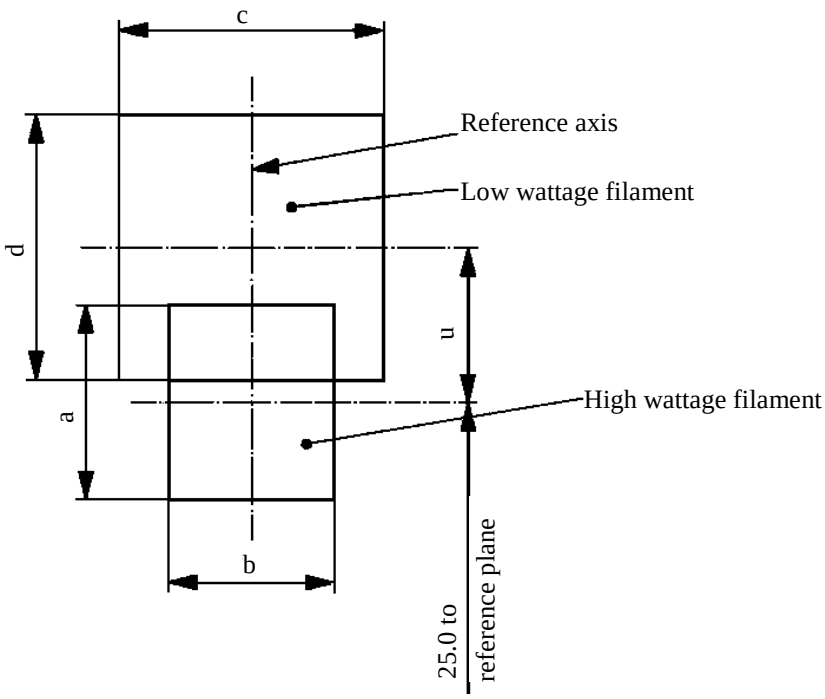

Reference	*a*	*b*	*c*	*d*	*u*
Dimension	3.5	3.0	4.8		2.8

Front elevation

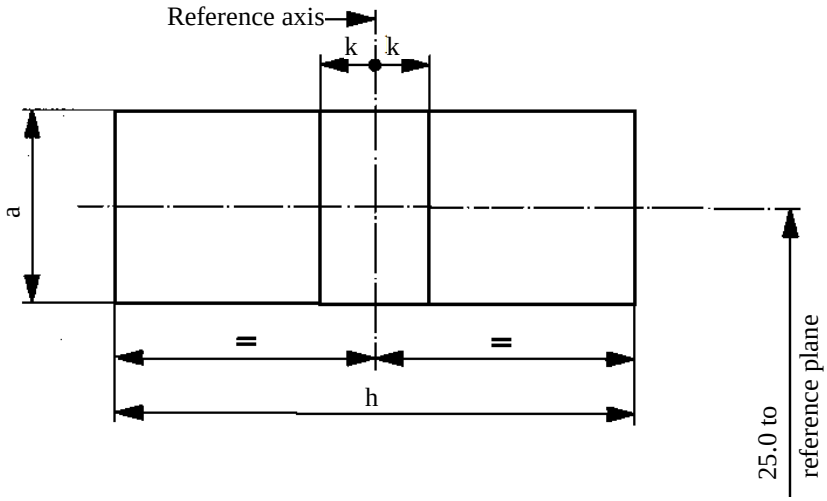

Reference	*a*	*h*	*k*
Dimension	3.5	9.5	1.0

Categories WP21W and WPY21W **Sheet WP21W/1**

The drawings are intended only to illustrate the essential dimensions (in mm) of the filament light source.

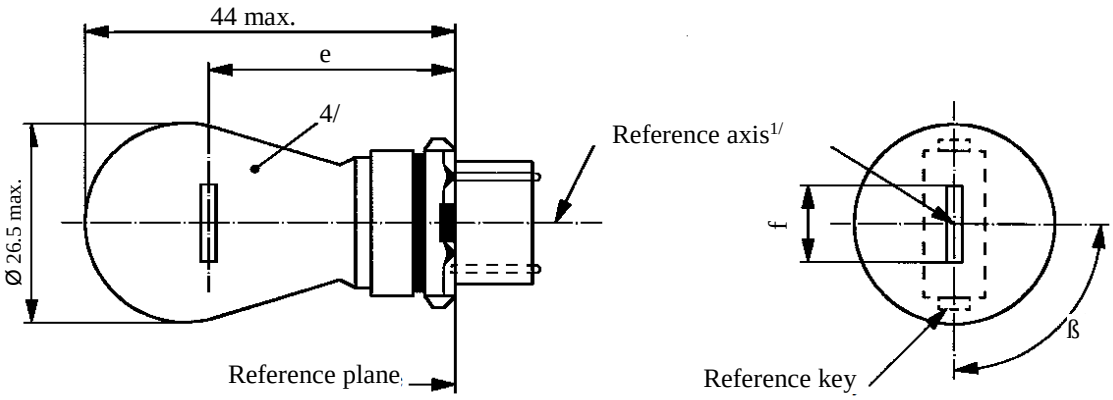

Dimensions in mm			*Filament light sources of normal production*			*Standard filament light source*
			Min.	*Nom.*	*Max.*	
e				27.9 3/		27.9 ± 0.3
f			5.5	6.0	7.0	6.0 ± 0.5
Lateral deviation 2/					3/	0.0 ± 0.4
β			75° 3/	90°	105° 3/	90° ± 5°
Cap:	WP21W: WY2.5x16d WPY21W: WZ2.5x16d		in accordance with IEC Publication 60061			(sheet 7004-104B-1) (sheet 7004-104C-1)
Electrical and photometric characteristics						
Rated values		Volts	12			12
		Watts	21			21
Test voltage		Volts	13.5			13.5
Objective values		Watts	26.5 max.			26.5 max.
	Luminous flux	WP21W	460 ± 15 %			
		WPY21W	280 ± 20 %			
Reference luminous flux at approximately 13.5 V						White: 460 lm Amber: 280 lm

1/ The reference axis is defined with respect to the reference keys and is perpendicular to the reference plane.

2/ Maximum lateral deviation of filament centre from two mutually perpendicular planes both containing the reference axis and one containing the axis through the reference keys.

3/ To be checked by means of a "Box system"; sheet WP21W/2.

4/ The light emitted from filament light sources of normal production shall be white for category WP21W and amber for category WPY21W (see also footnote 5/).

5/ The light emitted from standard filament light sources shall be white for category WP21W and white or amber for category WPY21W.

Screen projection requirements

This test is used to determine, by checking whether the filament is correctly positioned relative to the reference axis and reference plane and has an axis perpendicular, within ±15°, to the plane through the centre line of the keys and the reference axis, whether a filament light source complies with the requirements.

Side elevation Front elevation

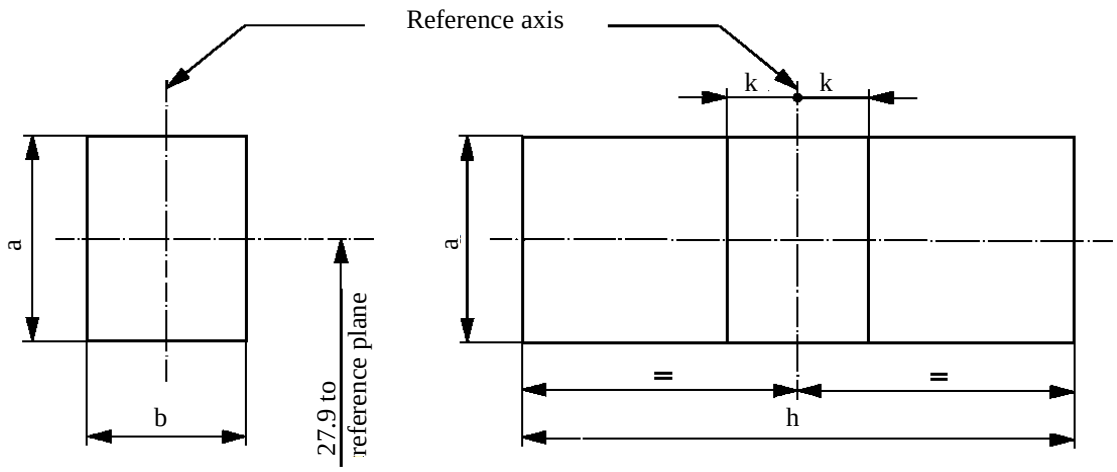

Reference	*a*	*b*	*h*	*k*
Dimension	3.5	3.0	9.0	1.0

Test procedures and requirements

1. The filament light source is placed in a holder capable of being rotated about its axis and having either a calibrated scale or fixed stops corresponding to the angular displacement tolerance limits. The holder is then so rotated that an end view of the filament is seen on the screen on to which the image of the filament is projected. The end view of the filament shall be obtained within the angular displacements tolerance limits.

2. Side elevation

   The filament light source placed with the cap down, the reference axis vertical and the filament seen end-on, the projection of the filament shall lie entirely within a rectangle of height "a" and width "b", having its centre at the theoretical position of the centre of the filament.

3. Front elevation

   The filament light source placed with the cap down and the reference axis vertical, the filament light source being viewed in a direction at right angles to the filament axis:

3.1. The projection of the filament shall lie entirely within a rectangle of height "a" and width "h", having its centre at the theoretical position of the centre of the filament.

3.2. The centre of the filament shall not be offset by more than distance "k" from the reference axis.

Category WR21/5W **Sheet WR21/5W/1**

The drawings are intended only to illustrate the essential dimensions (in mm) of the filament light source.

a = major (high wattage) filament
b = minor (low wattage) filament

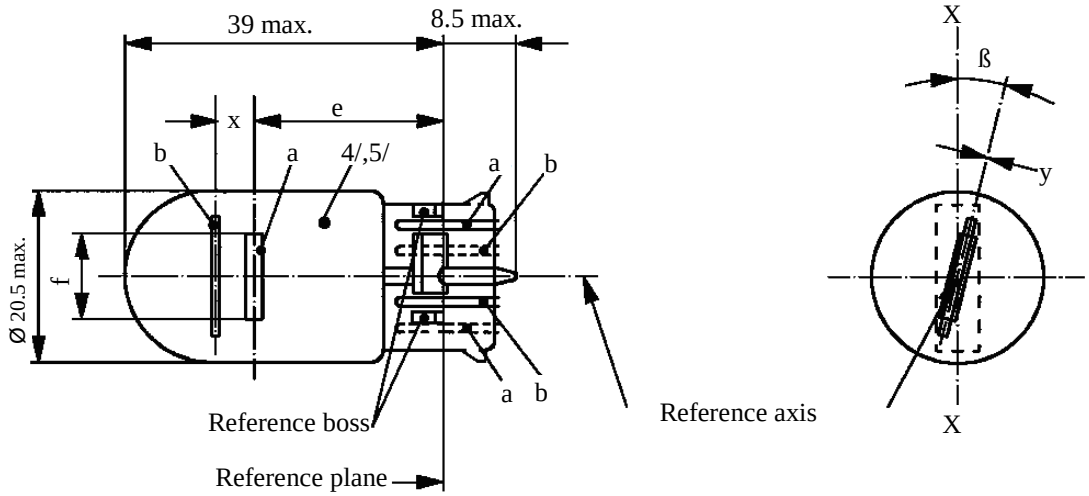

Dimensions in mm		Filament light sources of normal production			Standard filament light source	
		Min.	*Nom.*	*Max.*		
e			25.0 1/		25.0 ± 0.3	
f				7.5	7.5 + 0 / -2	
Lateral deviation 2/				1/	0.3 max.	
x 3/			2.8 1/		2.8 ± 0.3	
y 3/			0.0 1/		0.0 ± 0.3	
β		-15° 1/	0°	15° 1/	0° ± 5°	
Cap WY3x16q in accordance with IEC Publication 60061 (sheet 7004-106-4)						
Electrical and photometric characteristics						
Rated values	Volts	12			12	
	Watts	21	5		21	5
Test voltage	Volts	13.5			13.5	
Objective values	Watts	26.5 max.	6.6 max.		26.5 max.	6.6 max.
	Luminous flux	105 ± 20 %	8 ± 25 %			
Reference luminous flux at approximately 13.5 V:				White: 440 lm and 35 lm Red: 105 lm and 8 lm		

1/ To be checked by means of a "Box system"; sheets W21/5W/2 and 3.
2/ Maximum lateral deviation of filament centre from two mutually perpendicular planes both containing the reference axis and one containing axis X-X.
3/ "x" and "y" denote the offset of the axis of the minor filament with respect to the axis of the major filament.
4/ The light emitted from normal production filament light sources shall be red (see also footnote 5/).
5/ The light emitted from standard filament light sources shall be white or red.

CategoriesWT21W and WTY21W **Sheet WT21W/1**

The drawings are intended only to illustrate the essential dimensions (in mm) of the filament light source.

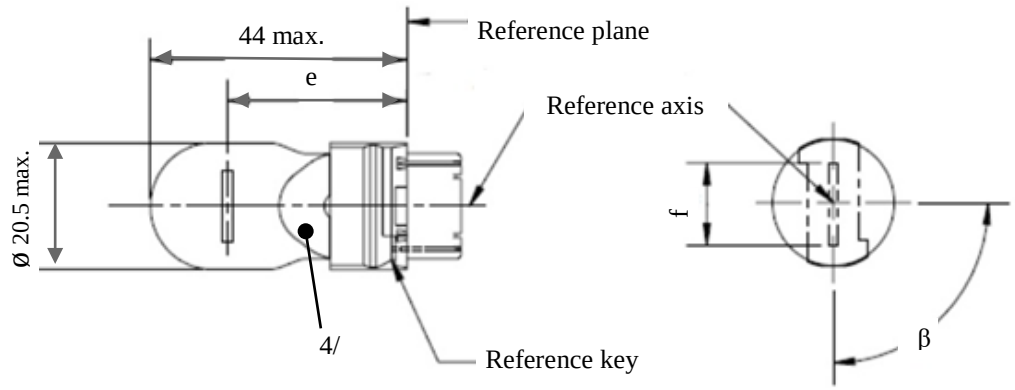

Dimensions in mm		*Filament light sources of normal production*			*Standard filament light source* [5/]
		Min.	*Nom.*	*Max.*	
e	12 V		27.9 [3/]		27.9 ± 0.3
	24 V	26.9	27.9	28.9	
f				7.5	7.5 + 0 / - 2
Lateral deviation [2/]	12 V			[3/]	0.0 ± 0.4
	24 V			1.5	
β		75° [3/]	90°	105° [3/]	90° ± 5°
Cap: WT21W: WUX2.5x16d WTY21W: WUY2.5x16d		in accordance with IEC Publication 60061			(sheet 7004-176-1) (sheet 7004-177-1)
Electrical and photometric characteristics					
Rated values	Volts	12		24	12
	Watts	21			21
Test voltage	Volts	13.5		28.0	13.5
Objective values	Watts	26.5 max.		29.7 max.	26.5 max.
	Luminous flux WT21W	460 ± 15 %			
	Luminous flux WTY21W	280 ± 20 %			
Reference luminous flux at approximately 13.5 V:					White: 460 lm Amber: 280 lm

1/ The reference axis is defined with respect to the reference keys and is perpendicular to the reference plane.

2/ Maximum lateral deviation of the major (high wattage) filament centre from two mutually perpendicular planes both containing the reference axis and one containing the axis through the reference keys.

3/ To be checked by means of a "Box system", sheets WT21W/2.

4/ The light emitted from filament light sources of normal production shall be white for category WT21W and amber for category WTY21W (see also note 5/).

5/ The light emitted from standard filament light sources shall be white for category WT21W and white or amber for category WTY21W.

Screen projection requirements

This test is used to determine, by checking whether the filament is correctly positioned relative to the reference axis and reference plane and has an axis perpendicular, within ±15°, to the plane through the centres of the keys and the reference axis, whether a filament light source complies with the requirements.

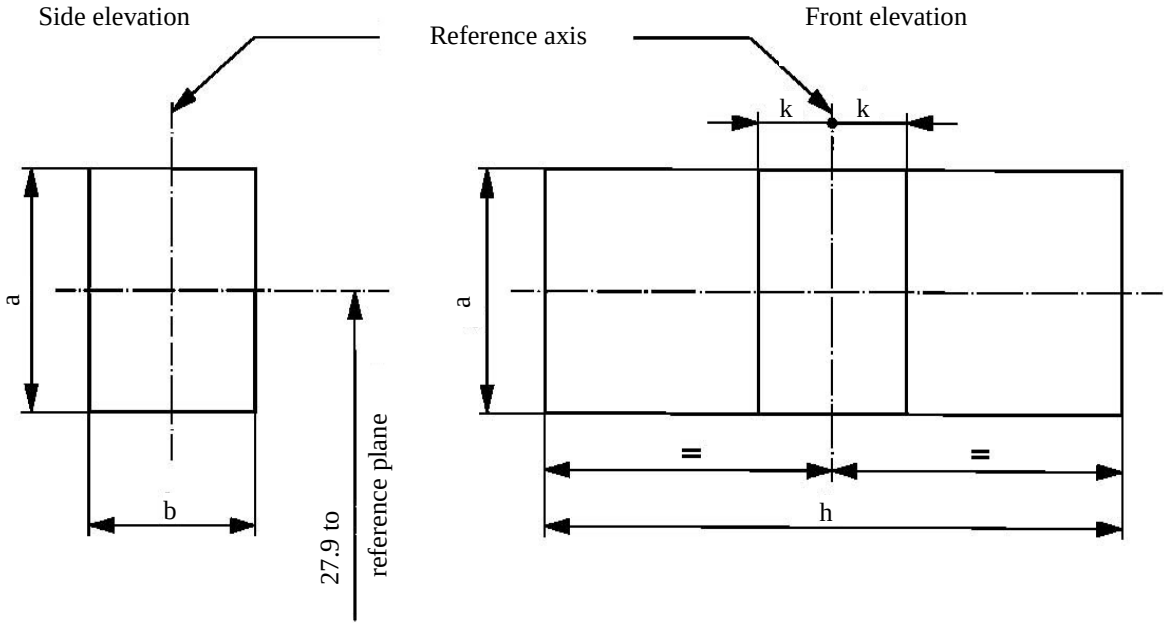

Reference	*a*	*b*	*h*	*k*
Dimension	3.5	3.0	9.5	1.0

Test procedures and requirements

1. The filament light source is placed in a holder capable of being rotated about its axis and having either a calibrated scale or fixed stops corresponding to the angular displacement tolerance limits. The holder is then so rotated that an end view of the filament is seen on the screen on to which the image of the filament is projected. The end view of the filament shall be obtained within the angular displacements tolerance limits.

2. Side elevation

   The filament light source placed with the cap down, the reference axis vertical and the filament seen end-on, the projection of the filament shall lie entirely within a rectangle of height "a" and width "b", having its centre at the theoretical position of the centre of the filament.

3. Front elevation

   The filament light source placed with the cap down and the reference axis vertical, the filament light source being viewed in a direction at right angles to the filament axis:

3.1. The projection of the filament shall lie entirely within a rectangle of height "a" and width "h", having its centre at the theoretical position of the centre of the filament.

3.2. The centre of the filament shall not be offset by more than distance "k" from the reference axis.

The drawings are intended only to illustrate the essential dimensions (in mm) of the filament light source.

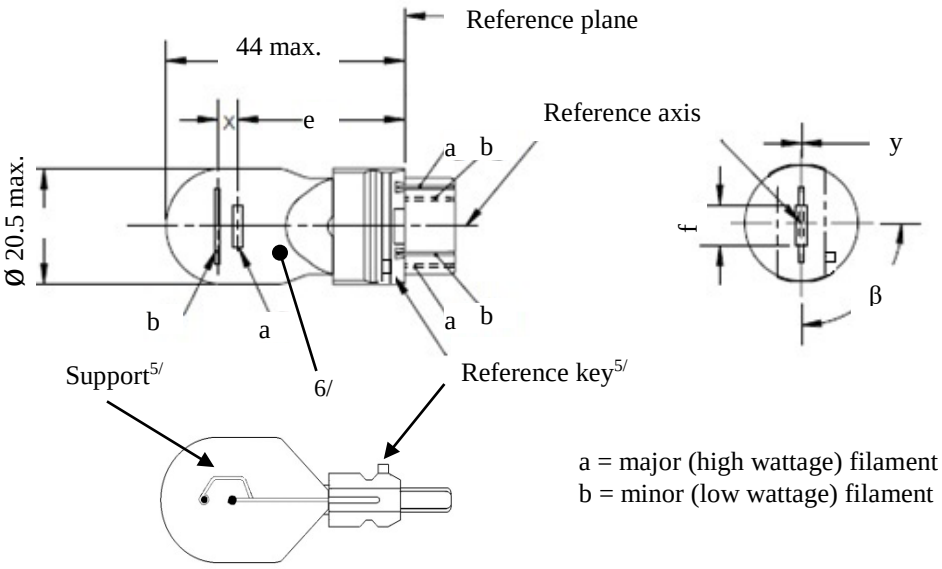

Dimensions in mm		*Filament light sources of normal production 6/*			*Standard filament light source 7/*	
		Min.	*Nom.*	*Max.*		
e			27.9 3/		27.9 ± 0.3	
f				7.5	7.5 + 0 / - 2	
Lateral deviation 2/				3/	0.0 ± 0.4	
x 4/			5.1 3/		5.1 ± 0.5	
y 4/			0.0 3/		0.0 ± 0.5	
β		75° 3/	90°	105° 3/	90° ± 5°	
Cap:	WT21/7W: WZX2.5x16q WTY21/7W: WZY2.5x16q	in accordance with IEC Publication 60061			(sheet 7004-180-1) (sheet 7004-181-1)	
Electrical and photometric characteristics						
Rated values	Volts	12			12	
	Watts	21	7		21	7
Test voltage	Volts	13.5			13.5	
Objective values	Watts	26.5 max.	8.5 max.		26.5 max.	8.5 max.
	Luminous flux	440 ± 15 %	35 ± 20 %			
		280 ± 20 %	22 ± 20 %			
Reference luminous flux at approximately 13.5 V:			White: 440 and 35 lm Amber: 280 and 22 lm			

For the notes see sheet WT21/7W/2.

1/ The reference axis is defined with respect to the reference keys and is perpendicular to the reference plane.

2/ Maximum lateral deviation of the major (high wattage) filament centre from two mutually perpendicular planes both containing the reference axis and one containing the axis through the reference keys.

3/ To be checked by means of a "Box system", sheets WT21/7W/2 and 3.

4/ "x" and 'y" denote the offset of the axis of the minor (low wattage) filament with respect to the axis of the major (high wattage) filament.

5/ If the minor filament is positioned using an asymmetric support similar to the one shown then the reference key and support structure shall be located on the same side of the filament light source.

6/ The light emitted from filament light sources of normal production shall be white for category WT21/7W and amber for category WTY21/7W (see also note 7/).

7/ The light emitted from standard filament light sources shall be white for category WT21/7W and white or amber for category WTY21/7W.

Screen projection requirements

This test is used to determine, by checking whether:

(a) The major (high wattage) filament is correctly positioned relative to the reference axis and reference plane and has an axis perpendicular, within ±15°, to the plane through the centres of the keys and the reference axis; and whether:

(b) The minor (low wattage) filament is correctly positioned relative to the major (high wattage) filament, whether a filament light source complies with the requirements.

Test procedure and requirements.

1. The filament light source is placed in a holder capable of being rotated about its axis and having either a calibrated scale or fixed stops corresponding to the angular displacement tolerance limits. The holder is then so rotated that an end view of the major filament is seen on the screen on which the image of the filament is projected. The end view of that filament shall be obtained within the angular displacement tolerance limits.

2. Side elevation

The filament light source placed with the cap down, the reference axis vertical, the reference key to the right and the major filament seen end-on:

2.1. The projection of the major filament shall lie entirely within a rectangle of height "a" and width "b", having its centre at the theoretical position of the centre of the filament;

2.2. The projection of the minor filament shall lie entirely within a rectangle of width "c" and height "d" having its centre at a distance "u" above the theoretical position of the centre of the major filament.

3. Front elevation

The filament light source being placed with the cap down and the reference axis vertical, the filament light source being viewed in a direction at right angles to axis of the major filament:

3.1. The projection of the major filament shall lie entirely within a rectangle of height "a" and width "h", centred on the theoretical position of the centre of the filament;

3.2. The centre of the major filament shall not be offset by more than distance "k" from the reference axis;

3.3. The centre of the minor filament axis shall not be offset from the reference axis by more than ±2 mm (±0.4 mm for standard filament light sources).

Side elevation

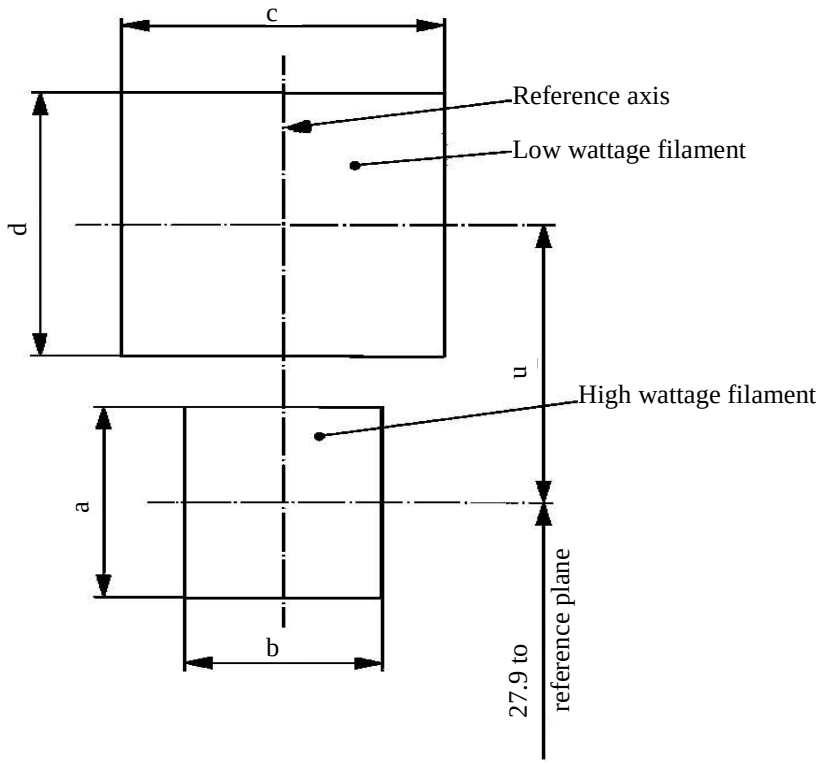

Reference	*a*	*b*	*c*	*d*	*u*
Dimensions	3.5	3.0	4.8		5.1

Front elevation

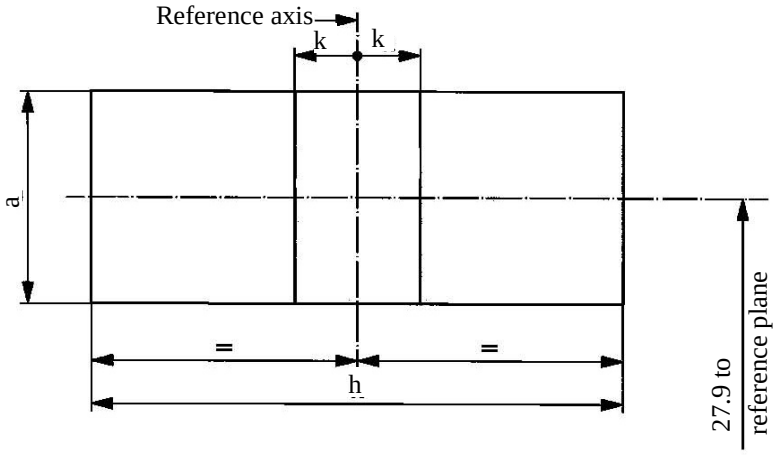

Reference	*a*	*h*	*k*
Dimensions	3.5	9.5	1.0

Category WY2.3W **Sheet WY2.3W/1**

The drawings are intended only to illustrate the essential dimensions (in mm) of the filament light source.

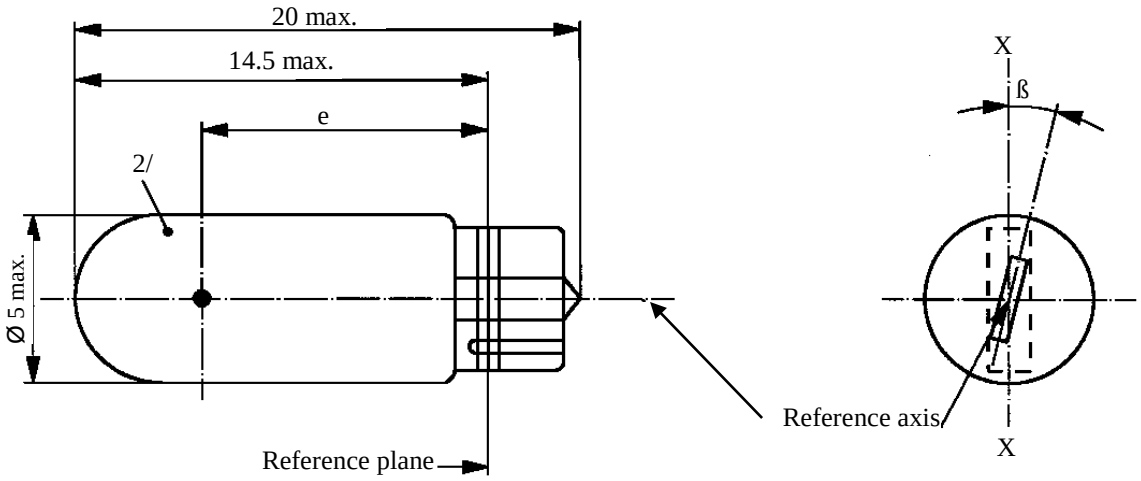

Dimensions in mm		*Filament light sources of normal production*			*Standard filament light source*
		Min.	*Nom.*	*Max.*	
e		10.3	10.8	11.3	10.8 ± 0.3
Lateral deviation [1/]				1.0	0.5 max.
β		-15°	0°	+15°	0° ± 5°
Cap W2x4.6d in accordance with IEC Publication 60061 (sheet 7004-94-2)					
Electrical and photometric characteristics					
Rated values	Volts	12			12
	Watts	2.3			2.3
Test voltage	Volts	13.5			13.5
Objective values	Watts	2.5 max.			2.5 max.
	Luminous flux	11.2 ± 20 %			
Reference luminous flux at approximately 13.5 V					White: 18.6 lm Amber: 11.2 lm

[1/] Maximum lateral deviation of filament centre from two mutually perpendicular planes both containing the reference axis and one containing axis X-X.

[2/] The light emitted from production filament light sources shall be amber (see also footnote 3/).

[3/] The light emitted from standard filament light sources shall be amber or white.

The drawings are intended only to illustrate the essential dimensions (in mm) of the filament light source.

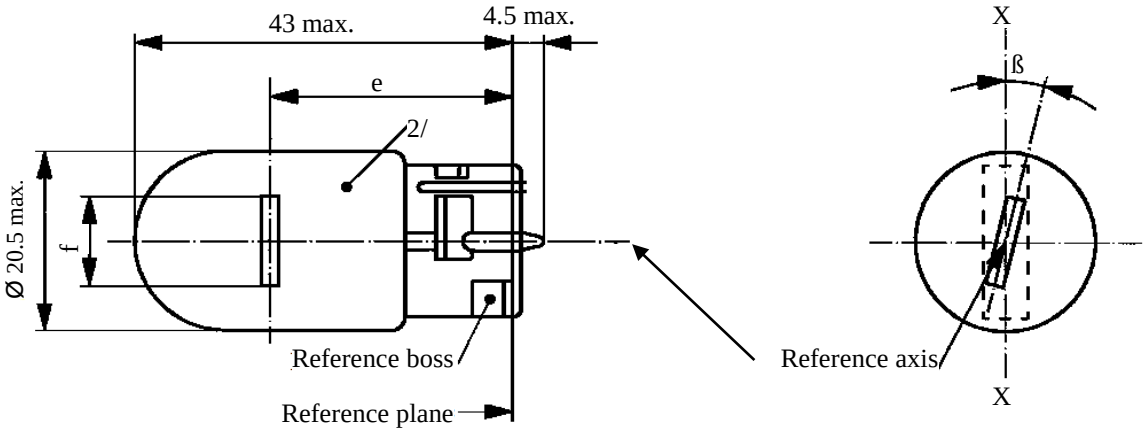

Dimensions in mm		*Filament light sources of normal production*			*Standard filament light source*
		Min.	*Nom.*	*Max.*	
e			29.0 [2/]		29.0 ± 0.3
f				7.5	7.5 + 0 / -2
Lateral deviation [1/]				[2/]	0.5 max.
β		-15°	0°	+15°	0° ± 5°
Cap WX3x16d in accordance with IEC Publication 60061 (sheet 7004-105-3)					
Electrical and photometric characteristics					
Rated values	Volts	12			12
	Watts	21			21
Test voltage	Volts	13.5			13.5
Objective values	Watts	26.5 max.			26.5 max.
	Luminous flux	280 ± 20 %			
Reference luminous flux at approximately 13.5 V:					White: 460 lm Amber: 280 lm

[1/] Maximum lateral deviation of filament centre from two mutually perpendicular planes both containing the reference axis and one containing axis X-X.

[2/] The light emitted from filament light sources of normal production shall be amber (see also footnote 4/).

[3/] To be checked by means of a "Box system"; sheet WY21W/2.

[4/] The light emitted from standard filament light sources shall be amber or white.

Category WY21W **Sheet WY21W/2**

Screen projection requirements

This test is used to determine, by checking whether the filament is correctly positioned relative to the reference axis and reference plane and has an axis perpendicular, within ±15°, to the plane through the axis X-X and the reference axis, whether a filament light source complies with the requirements.

Side elevation Front elevation

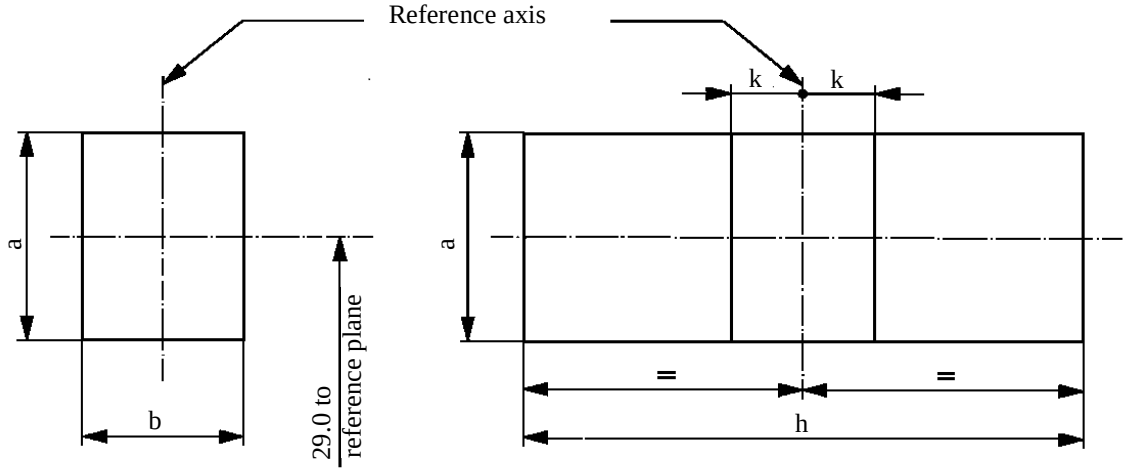

Reference	*a*	*b*	*h*	*k*
Dimension	3.5	3.0	9.5	1.0

Test procedures and requirements

1. The filament light source is placed in a holder capable of being rotated about its axis and having either a calibrated scale or fixed stops corresponding to the angular displacement tolerance limits, i.e. ±15°. The holder is then so rotated that an end view of the filament is seen on the screen on to which the image of the filament is projected. The end view of the filament shall be obtained within the angular displacements tolerance limits (±15°).

2. Side elevation

   The filament light source placed with the cap down, the reference axis vertical and the filament seen end-on, the projection of the filament shall lie entirely within a rectangle of height "a" and width "b", having its centre at the theoretical position of the centre of the filament.

3. Front elevation

   The filament light source placed with the cap down and the reference axis vertical, the filament light source being viewed in a direction at right angles to the filament axis:

3.1. The projection of the filament shall lie entirely within a rectangle of height "a" and width "h", having its centre at the theoretical position of the centre of the filament.

3.2. The centre of the filament shall not be offset by more than distance "k" from the reference axis.

Annex 2

Sheets for gas-discharge light sources

List of sheets for gas-discharge light sources and their sequence in this annex:

Sheet numbers	
DxR/1 to 7	(Sheet DxR/6: two pages)
DxS/1 to 6	
D5S/1 to 5	
D6S/1 to 5	
D8R/1 to 6	
D8S/1 to 5	
D9S/1 to 5	

The drawings are intended only to illustrate the essential dimensions (in mm) of the gas-discharge light source

Figure 1
Main drawing of category D1R - Type with cables - Cap PK32d-3

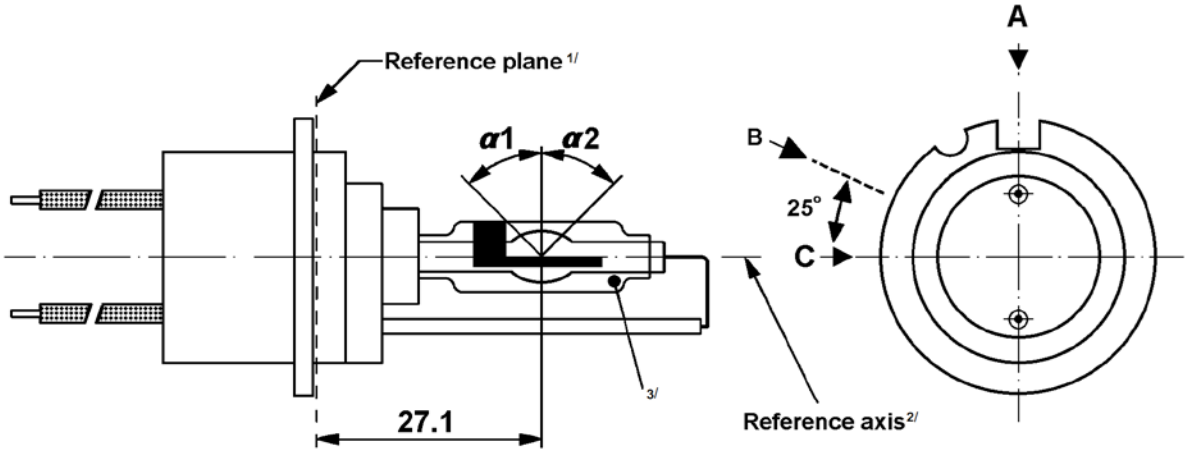

Figure 2
Main drawing of category D2R -Type with connector - Cap P32d-3

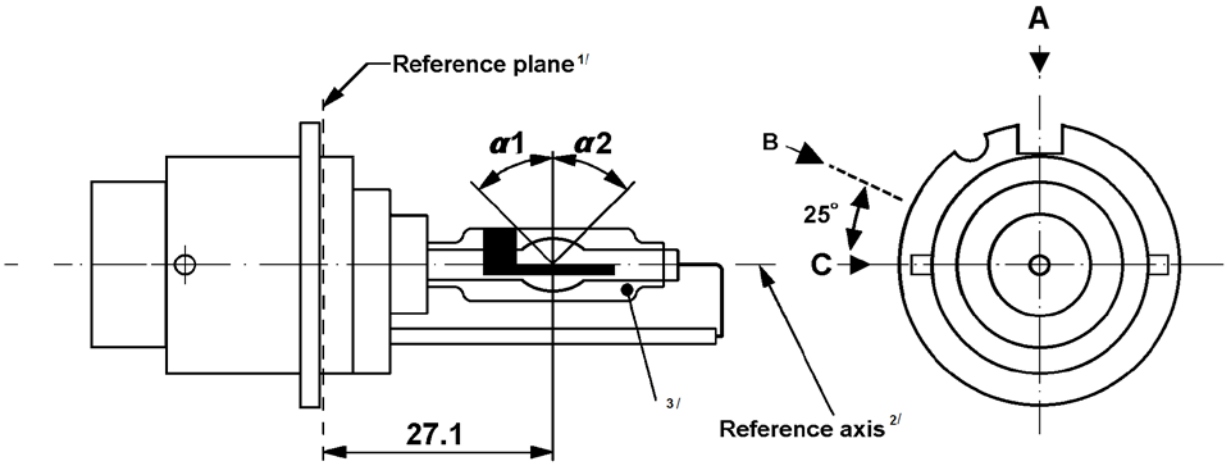

1/ The reference plane is defined by the positions on the surface of the holder on which the three supporting bosses of the cap ring will rest.

2/ See sheet DxR/3.

3/ With respect to the reference axis, when measured at a distance of 27.1 mm from the reference plane the eccentricity of the outer bulb shall be less than ±0.5 mm in direction C and less than -1 mm /+0.5 mm in direction A.

The drawings are intended only to illustrate the essential dimensions (in mm) of the gas-discharge light source

Figure 3
Main drawing of category D3R - Type with starter – Cap PK32d-6

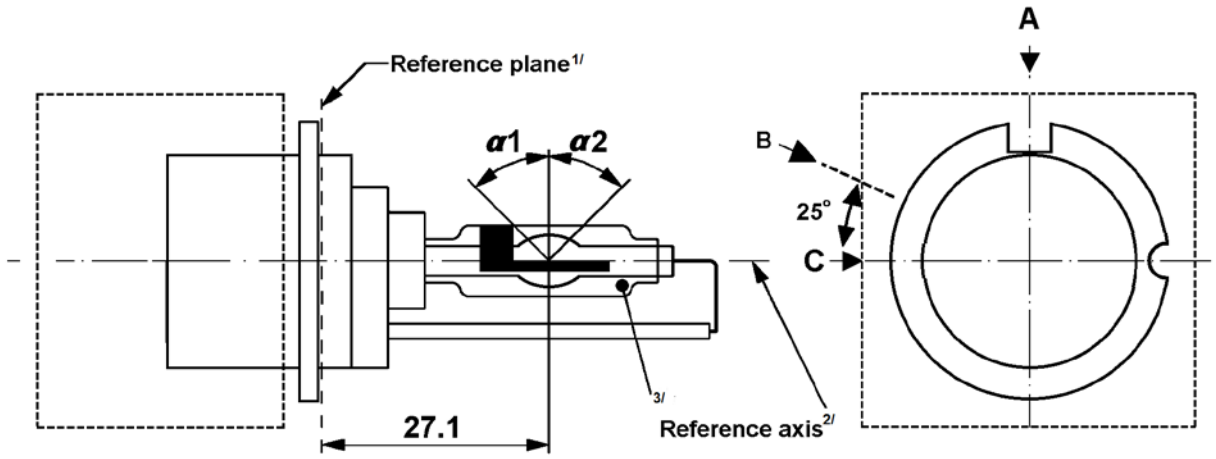

Figure 4
Main drawing of category D4R - Type with connector – Cap P32d-6

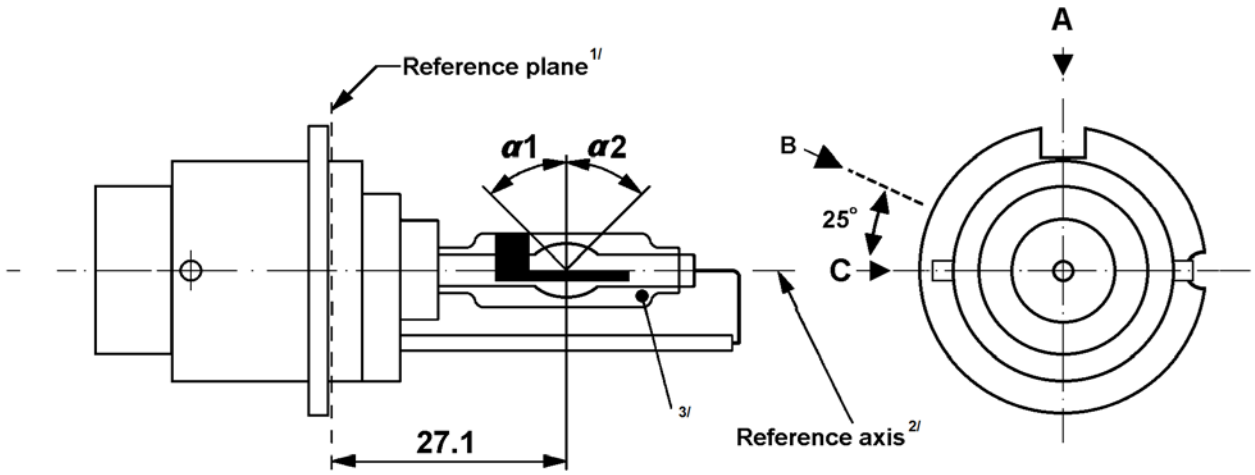

1/ The reference plane is defined by the positions on the surface of the holder on which the three supporting bosses of the cap ring will rest.

2/ See sheet DxR/3.

3/ With respect to the reference axis, when measured at a distance of 27.1 mm from the reference plane the eccentricity of the outer bulb shall be less than ±0.5 mm in direction C and less than -1 mm /+0.5 mm in direction A.

Figure 5

Definition of reference axis[1/]

The cap shall be pushed in this direction

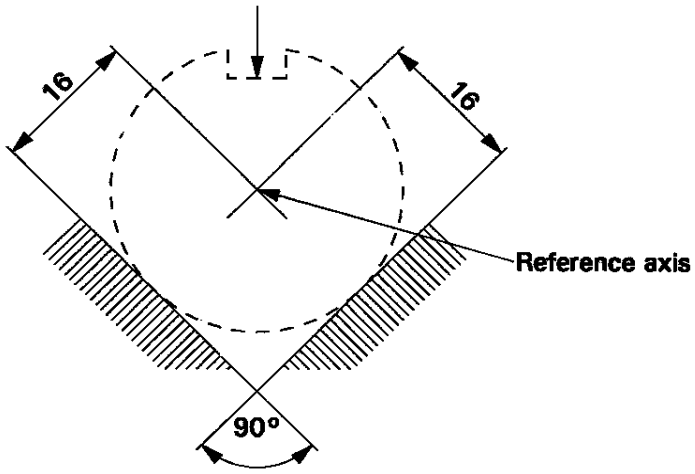

Figure 6

Maximum gas discharge light source outline[2/]

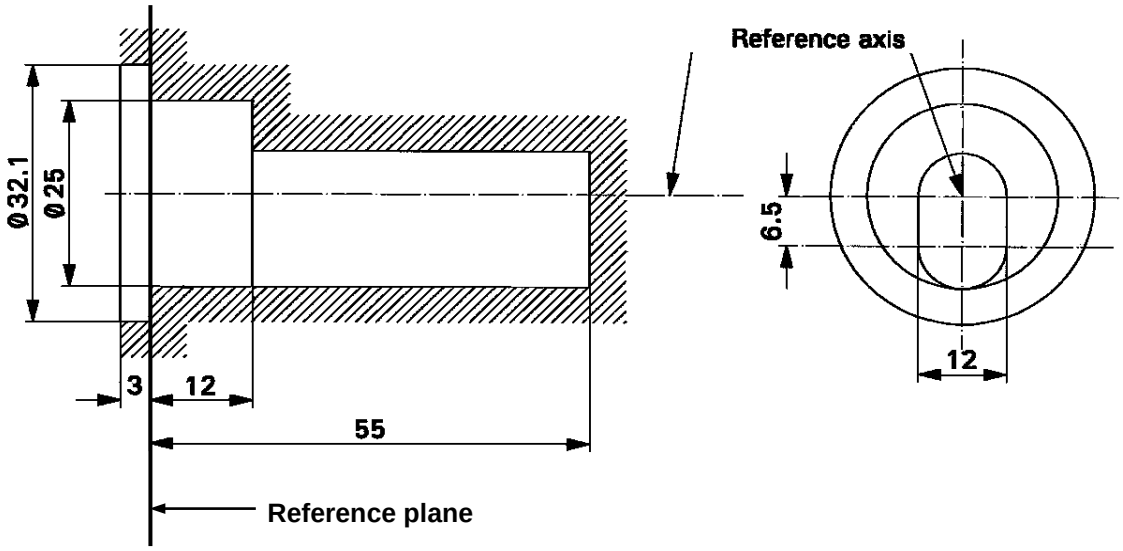

1/ The reference axis is perpendicular to the reference plane and crosses the intersection of the two parallel lines as indicated in figure 5.

2/ Glass bulb and supports shall not exceed the envelope, as indicated in figure 6. The envelope is concentric with the reference axis.

Dimensions			*Production light sources*		*Standard light sources*	
Position of electrodes			Sheet DxR/5			
Position and form of the arc			Sheet DxR/6			
Position of the black stripes			Sheet DxR/7			
α1 [1/]			45° ± 5°			
α2 [1/]			45° min.			
D1R: Cap PK32d-3 D2R: Cap P32d-3 D3R: Cap PK32d-6 D4R: Cap P32d-6	in accordance with IEC Publication 60061 (sheet 7004-111-5)					
ELECTRICAL AND PHOTOMETRIC CHARCTERISTICS						
			D1R/ D2R	D3R/D4R	D1R/D2 R	D3R/D4R
Rated voltage of the ballast		V	12 [2/]		12	
Rated wattage		W	35		35	
Test voltage		V	13.5		13.5	
Gas discharge light source voltage	Objective	V	85	42	85	42
	Tolerance		±17	±9	±8	±4
Gas discharge light source wattage	Objective	W	35		35	
	Tolerance		±3		±0.5	
Luminous flux	Objective	lm	2800		2800	
	Tolerance		±450		±150	
Chromaticity co-ordinates in the case of white light	Objective		x = 0.375		y = 0.375	
	Tolerance area	Boundaries	x = 0.345 x = 0.405		y = 0.150 + 0.640 x y = 0.050 + 0.750 x	
		Intersection points	x = 0.345 x = 0.405 x = 0.405 x = 0.345		y = 0.371 y = 0.409 y = 0.354 y = 0.309	
Hot re-strike switch-off time		s	10		10	

[1/] The part of the bulb within the angles α1 and α2 shall be the light emitting part. This part shall be as homogeneous in form as possible and shall be optically distortion free. This applies to the whole bulb circumference within the angles α1 and α2 except for the black stripes.

[2/] Application voltages of ballasts may differ from 12 V.

Categories D1R, D2R, D3R and D4R **Sheet DxR/5**

Position of the electrodes

This test is used to determine whether the electrodes are correctly positioned relative to the reference axis and the reference plane.

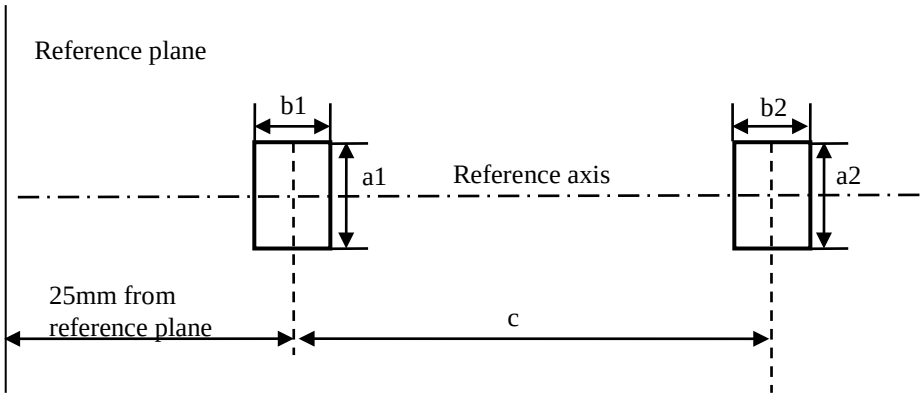

Measuring direction: light source side and top view

Dimension in mm	*Production light sources*	*Standard light sources*
a1	d + 0.5	d + 0.2
a2	d + 0.7	d + 0.35
b1	0.4	0.15
b2	0.8	0.3
c	4.2	4.2

d = diameter of the electrode;
d < 0.3 for D1R and D2R;
d < 0.4 for D3R and D4R.

The top of the electrode nearest to the reference plane shall be positioned in the area defined by a1 and b1. The top of the electrode furthest from the reference plane shall be positioned in the area defined by a2 and b2.

Position and form of the arc

This test is used to determine the form and sharpness of the arc and its position relative to the reference axis and plane by determining its bending and diffusion; by measuring the luminance in the central cross section D, where $Lmax_C$ is the maximum luminance of the arc measured from viewing direction C; see sheet DxR/2.

$Lmax_C$

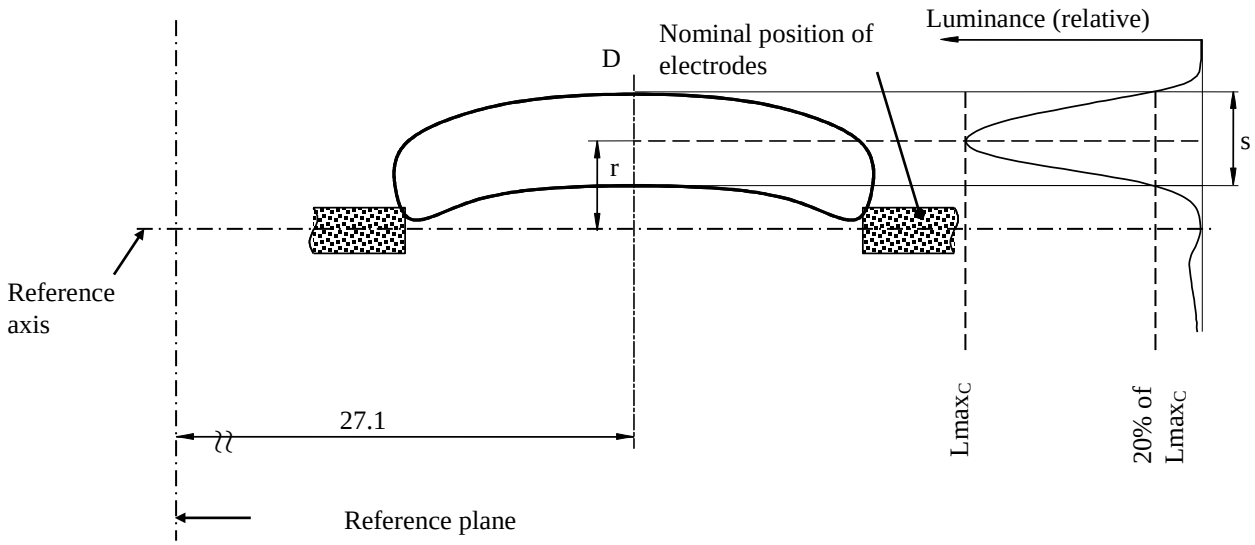

Relative luminance distribution in the central cross section D.

The form of the arc is for illustration purpose only.

Measuring direction C as defined on sheet DxR/7.

When measuring the relative luminance distribution in the central cross section D as indicated in the drawing above, the maximum value $Lmax_C$ has the distance r from the reference axis. The points of 20% of $Lmax_C$ have the distance s, as shown in the drawing above.

Dimension in mm	*Production light sources*		*Standard light sources*
	D1R/D2R	*D3R/D4R*	
r (arc bending)	0.50 ± 0.25	0.50 ± 0.25	0.50 ± 0.20
s (arc diffusion)	1.10 ± 0.25	1.10 + 0.25/-0.40	1.10 ± 0.25

Stray light

This test is used to determine unwanted reflected stray light by measuring the luminance in Zone A and at lines B and C, where $Lmax_B$ is the maximum luminance of the arc measured from viewing direction B; see sheet DxR/2.

$Lmax_B$

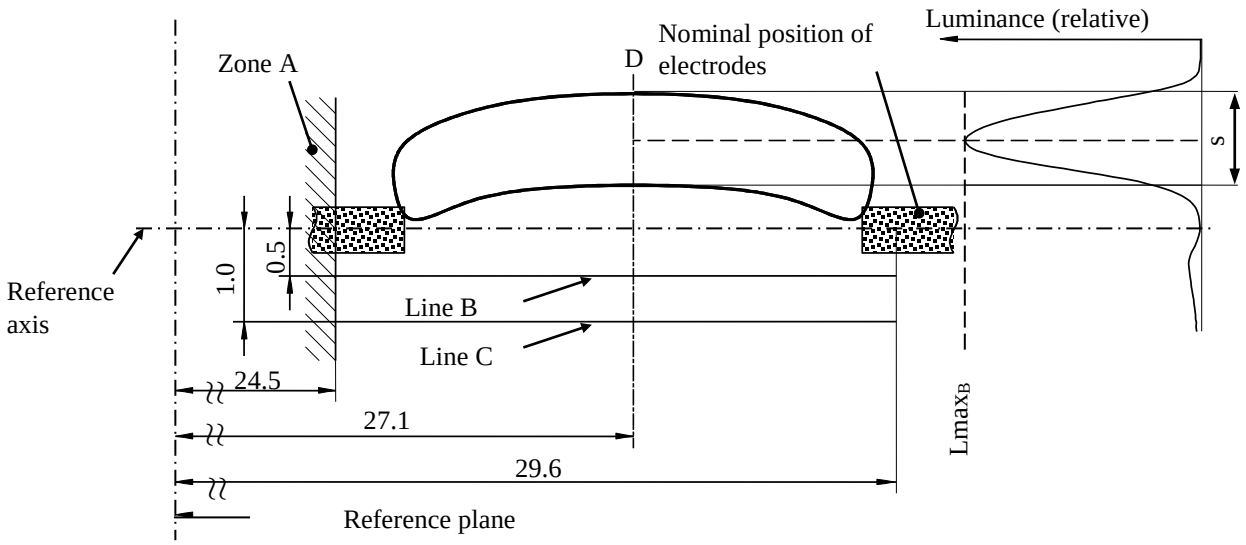

Relative luminance distribution in the central cross section D.

The form of the arc is for illustration purpose only.

Measuring direction B as defined on sheet DxR/7.

When measuring the luminances from measuring direction B as defined on sheet DxR/7, the relative luminance expressed as a percentage of $Lmax_B$ (at cross section D) shall be:

Zone A	≤ 4.5 %
Line B	≤ 15 %
Line C	≤ 5.0 %

The area of zone A is defined by the black coating, the outer bulb and a plane at 24.5 mm from the reference plane.

Position of black stripes

This test is used to determine whether the black stripes are correctly positioned relative to the reference axis and the reference plane.

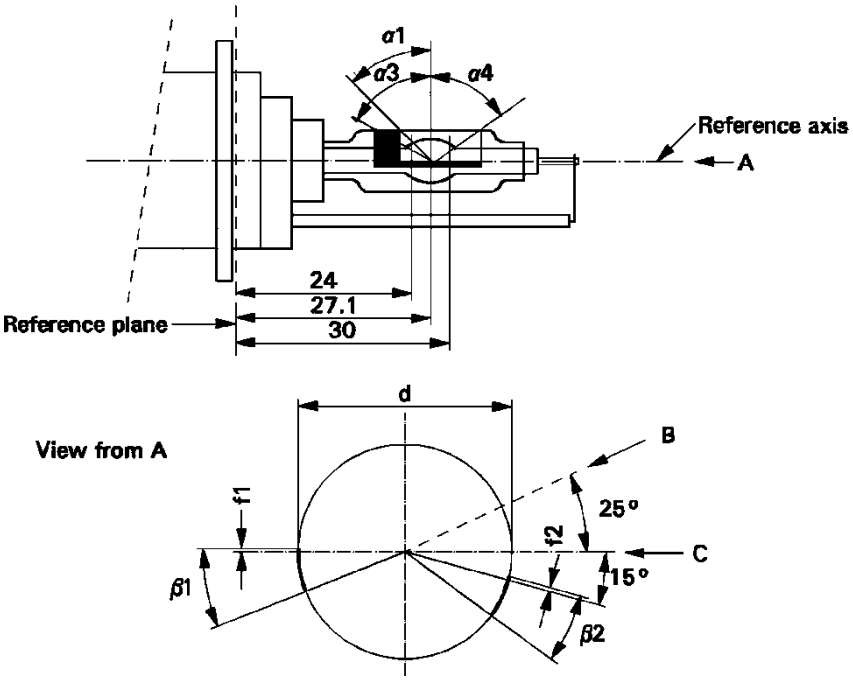

When measuring the luminance distribution of the arc in the central cross section as defined on sheet DxR/6, after having turned the light source so that the black stripe is covering the arc, the measured luminance shall be ≤ 0.5 % of Lmax.

In the area defined by α1 and α3 the black coating may be replaced by any other means which prevents light transmission through the specified area.

Dimensions	*Production light sources*	*Standard light sources*
α1	45° ± 5°	
α3	70° min.	
α4	65° min.	
β1/24, β1/30, β2/24, β2/30	25° ± 5°	
f1/24, f2/24 [1/]	0.15 ± 0.25	0.15 ± 0.20
f1/30 [1/]	f1/24 mv ± 0.15 [2/]	f1/24 mv ± 0.1
f2/30 [1/]	f2/24 mv ± 0.15 [2/]	f2/24 mv ± 0.1
f1/24 mv - f2/24 mv	±0.3 max.	±0.2 max.
d	9 ± 1	

[1/] "f1/.." means dimension f1 to be measured at the distance from the reference plane indicated in mm after the stroke.

[2/] "../24 mv" means the value measured at a distance of 24 mm from the reference plane.

The drawings are intended only to illustrate the essential dimensions (in mm) of the gas-discharge light source

Figure 1
Main drawing of category D1S - Type with cables - Cap PK32d-2

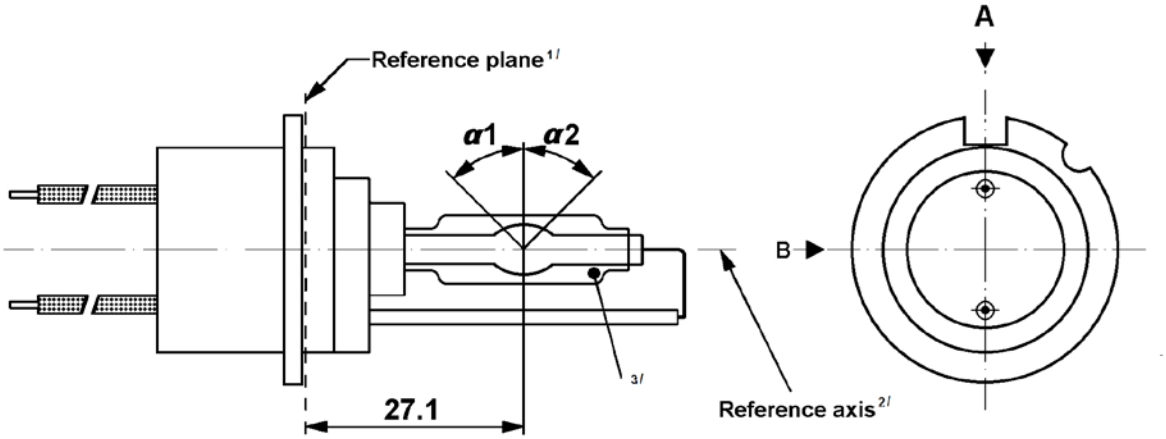

Figure 2
Main drawing of category D2S - Type with connector - Cap P32d-2

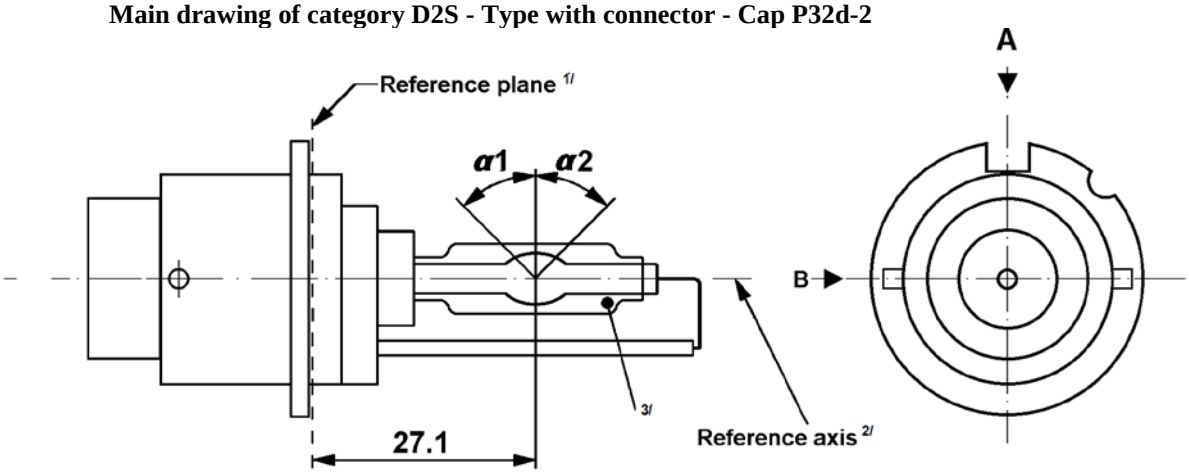

1/ The reference plane is defined by the positions on the surface of the holder on which the three supporting bosses of the cap ring will rest.

2/ See sheet DxS/3.

3/ When measured at a distance of 27.1 mm from the reference plane and with respect to the mid-point of the inner bulb, the outer bulb shall have an eccentricity of 1 mm max.

The drawings are intended only to illustrate the essential dimensions (in mm) of the gas-discharge light source

Figure 3
Main drawing of category D3S - Type with starter - Cap PK32d-5

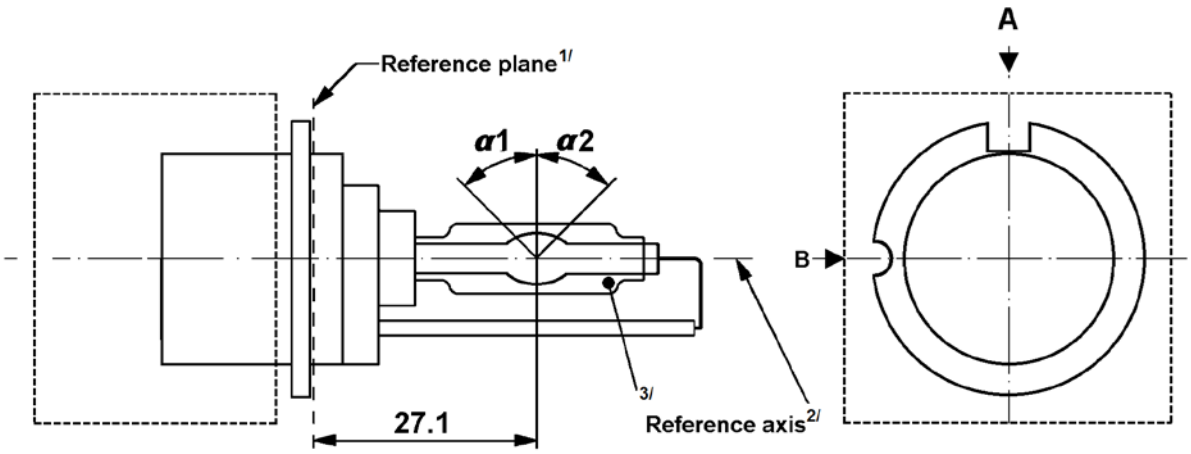

Figure 4
Main drawing of category D4S - Type with connector - Cap P32d-5

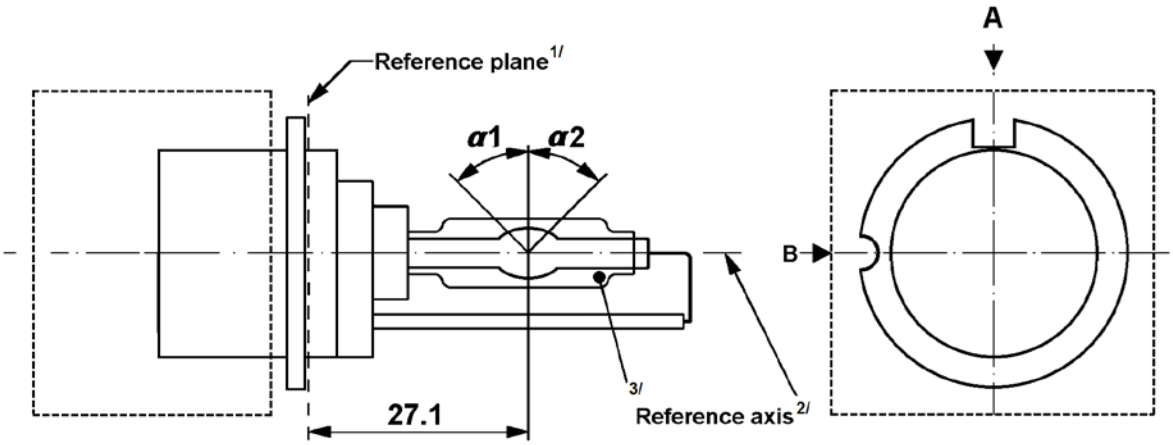

1/ The reference plane is defined by the positions on the surface of the holder on which the three supporting bosses of the cap ring will rest.

2/ See sheet DxS/3.

3/ When measured at a distance of 27.1 mm from the reference plane and with respect to the mid-point of the inner bulb, the outer bulb shall have an eccentricity of 1 mm max.

Figure 5

Definition of reference axis[1/]

The cap shall be pushed in this direction

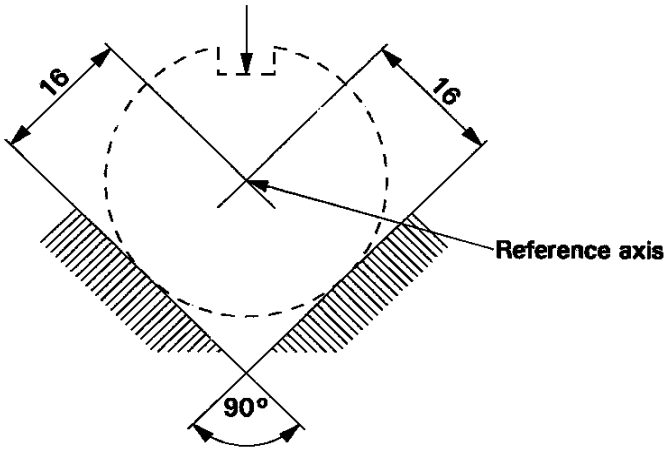

Figure 6

Maximum gas discharge light source outline[2/]

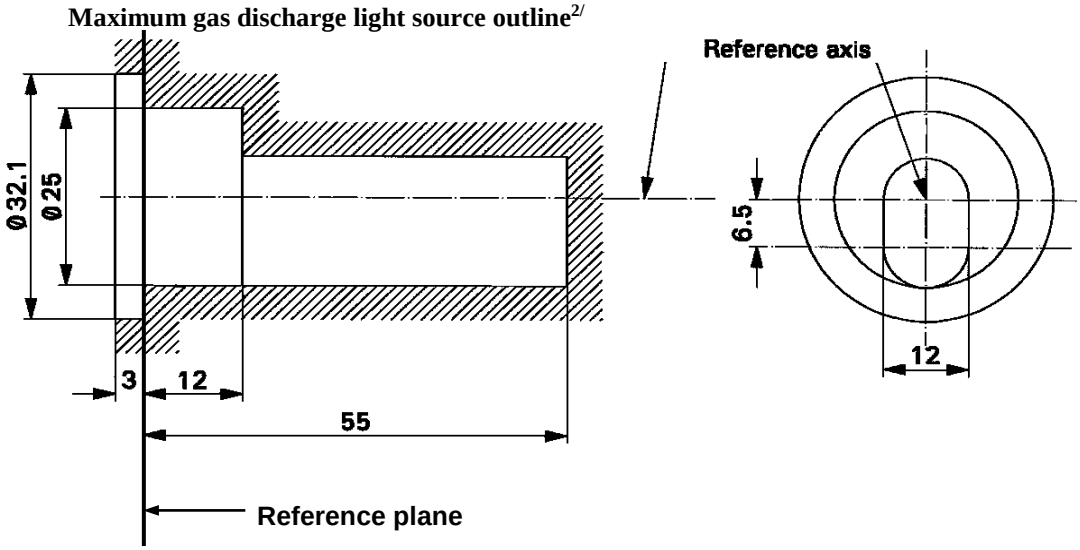

1/ The reference axis is perpendicular to the reference plane and crosses the intersection of the two parallel lines as indicated in figure 5.

2/ Glass bulb and supports shall not exceed the envelope, as indicated in figure 6. The envelope is concentric with the reference axis.

Dimensions			*Production light sources*		*Standard light sources*	
Position of electrodes			Sheet DxS/5			
Position and form of the arc			Sheet DxS/6			
α1, α2[1/]			55° min.		55° min.	
D1S: Cap PK32d-2 D2S: Cap P32d-2 D3S: Cap PK32d-5 D4S: Cap P32d-5	in accordance with IEC Publication 60061 (sheet 7004-111-5)					
ELECTRICAL AND PHOTOMETRIC CHARACTERISTICS						
			D1S/D2S	D3S/D4S	D1S/D2S	D3S/D4S
Rated voltage of the ballast		V	12 [2/]		12	
Rated wattage		W	35		35	
Test voltage		V	13.5		13.5	
Gas discharge light source voltage	Objective	V	85	42	85	42
	Tolerance		±17	±9	±8	±4
Gas discharge light source wattage	Objective	W	35		35	
	Tolerance		±3		±0.5	
Luminous flux	Objective	lm	3200		3200	
	Tolerance		±450		±150	
Chromaticity co-ordinates in the case of white light	Objective		x = 0.375		y = 0.375	
	Tolerance area	Boundaries	x = 0.345 x = 0.405		y = 0.150 + 0.640 x y = 0.050 + 0.750 x	
		Intersection points	x = 0.345 x = 0.405 x = 0.405 x = 0.345		y = 0.371 y = 0.409 y = 0.354 y = 0.309	
Hot re-strike switch-off time		s	10		10	

[1/] The part of the bulb within the angles α1 and α2 shall be the light emitting part. This part shall be as homogeneous in form as possible and shall be optically distortion free. This applies to the whole bulb circumference within the angles α1 and α2.

[2/] Application voltages of ballasts may differ from 12 V.

Categories D1S, D2S, D3S and D4S **Sheet DxS/5**

Position of the electrodes

This test is used to determine whether the electrodes are correctly positioned relative to the reference axis and the reference plane.

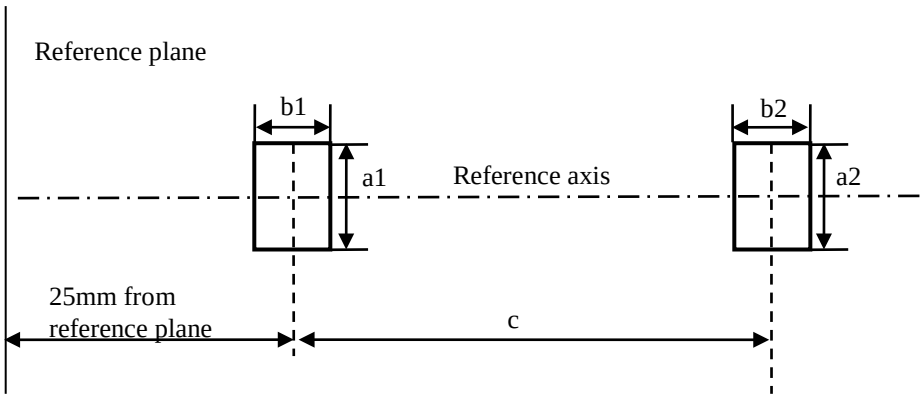

Measuring direction: light source side and top view

Dimension in mm	*Production light sources*	*Standard light sources*
a1	d + 0.2	d + 0.1
a2	d + 0.5	d + 0.25
b1	0.3	0.15
b2	0.6	0.3
c	4.2	4.2

d = diameter of the electrode;
d < 0.3 for D1S and D2S;
d < 0.4 for D3S and D4S.

The top of the electrode nearest to the reference plane shall be positioned in the area defined by a1 and b1. The top of the electrode furthest from the reference plane shall be positioned in the area defined by a2 and b2.

Position and form of the arc

This test is used to determine the form of the arc and its position relative to the reference axis and the reference plane by measuring its bending and diffusion in the cross section at a distance 27.1 mm from the reference plane.

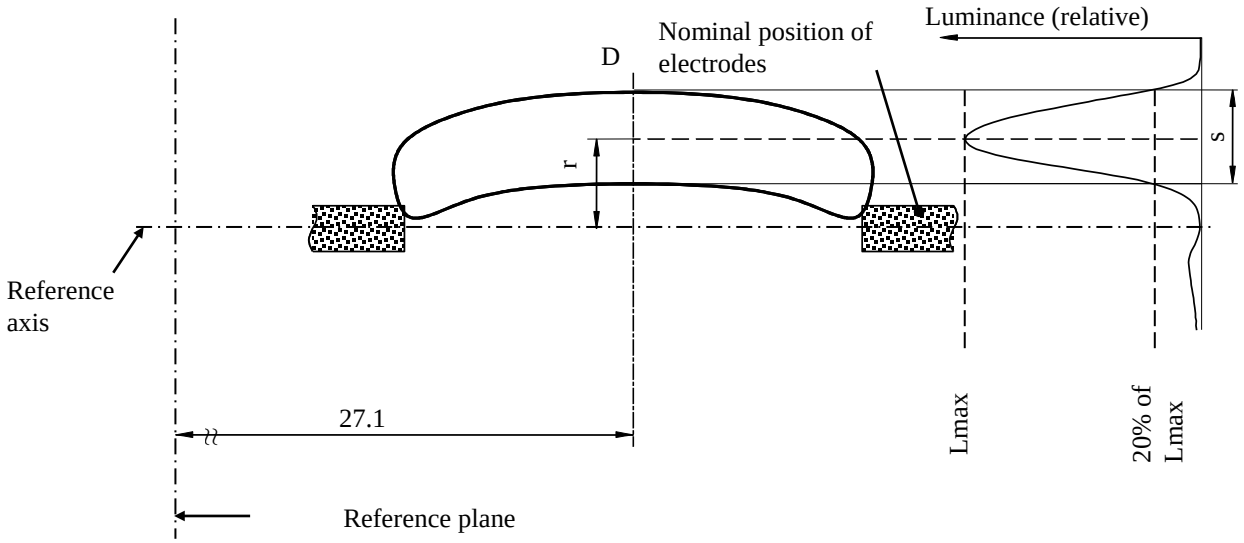

Relative luminance distribution in the central cross section D.

The form of the arc is for illustration purpose only.

Measuring direction B: light source side view

When measuring the relative luminance distribution in the central cross section as indicated in the drawing above, the maximum value shall be located within the distance r from the reference axis. The point of 20% of the maximum value shall be within s:

Dimension in mm	*Production light sources*	*Standard light sources*
r (arc bending)	0.50 ± 0.40	0.50 ± 0.20
s (arc diffusion)	1.10 ± 0.40	1.10 ± 0.25

Category D5S **Sheet D5S/1**

The drawings are intended only to illustrate the essential dimensions (in mm) of the gas-discharge light source

Figure 1
Main drawing of category D5S - Cap PK32d-7

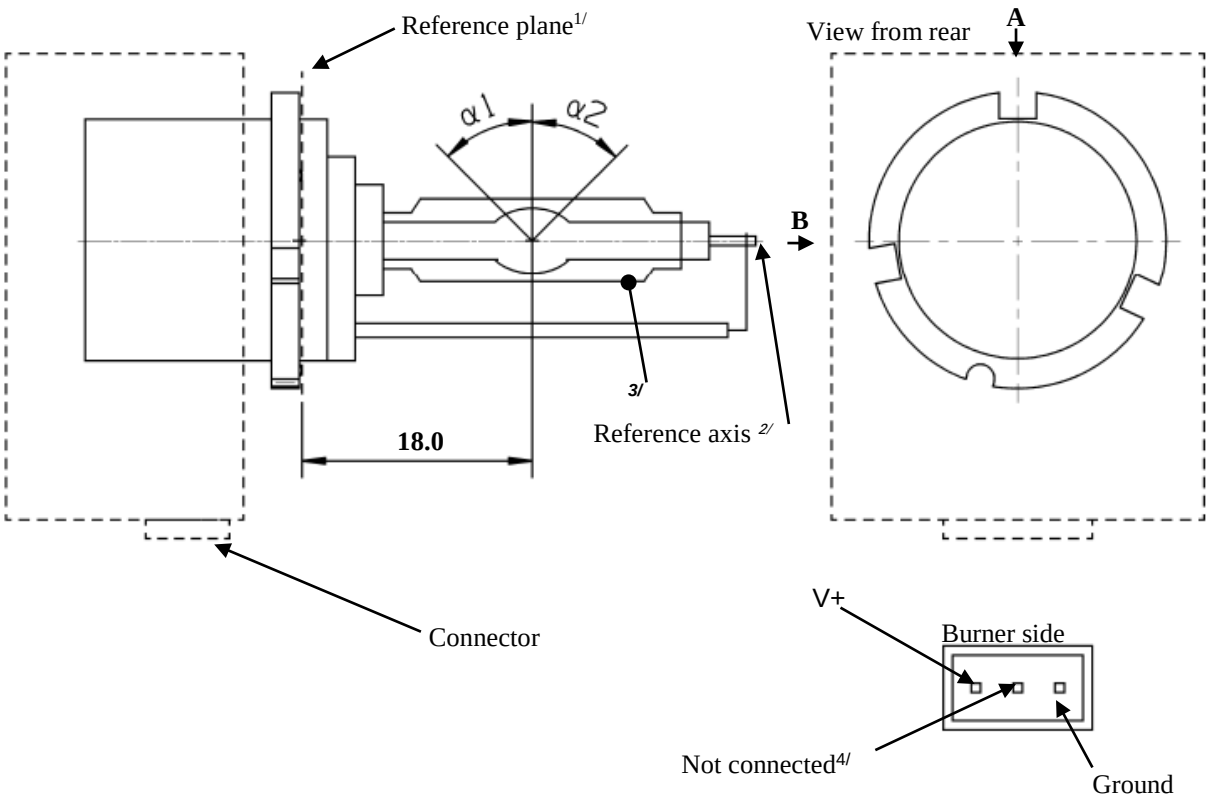

1/ The reference plane is defined by the positions on the surface of the holder on which the three supporting bosses of the cap ring will rest.

2/ See sheet D5S/2.

3/ When measured at a distance of 18.0 mm from the reference plane and with respect to the mid-point of the inner bulb, the outer bulb shall have an eccentricity of 1 mm max.

4/ Optional Pin.

Figure 2
Definition of reference axis[1/]

The cap shall be pushed in this direction

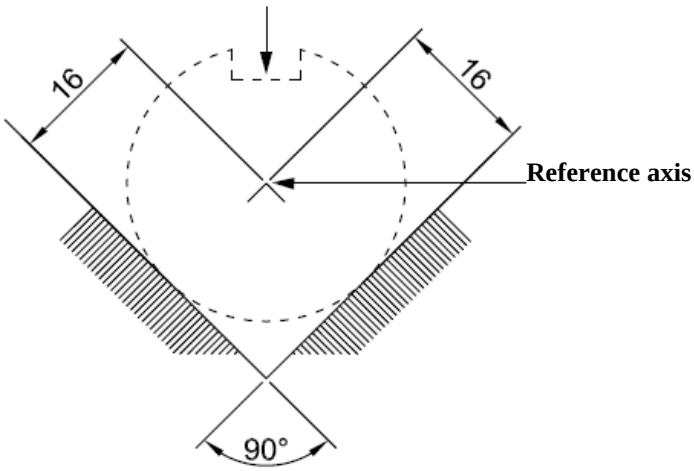

Figure 3
Maximum gas discharge light source outline[2/]

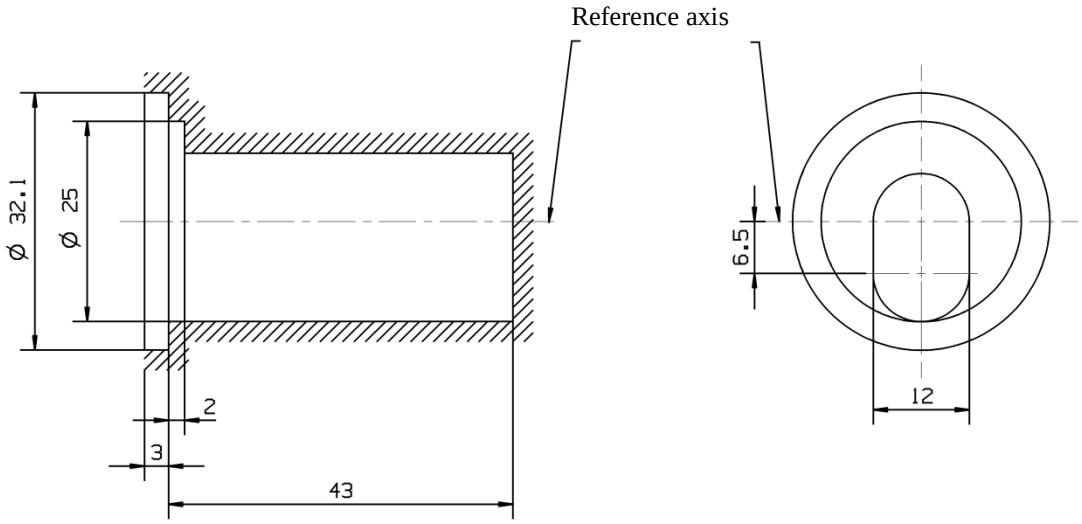

1/ The reference axis is perpendicular to the reference plane and crosses the intersection of the two parallel lines as indicated in figure 2.

2/ Glass bulb and supports shall not exceed the envelope, as indicated in figure 3.The envelope is concentric with the reference axis.

Category D5S **Sheet D5S/3**

Dimensions			*Production light sources*	*Standard light sources*
Position of the electrodes			Sheet D5S/4	
Position and form of the arc			Sheet D5S/5	
α1, α2[1/]			55° min.	55° min.
D5S: Cap PK32d-**7** in accordance with IEC Publication 60061 (sheet 7004-111-5)				
Electrical and photometric characteristics				
Rated voltage		V	12 / 24	12 / 24
Rated wattage		W	25	25
Test voltage		V	13.2 / 28	13.2 / 28
Objective gas discharge light source wattage[2/]		W	31 max.	31 max.
Chromaticity coordinates	Objective		x = 0.375	y = 0.375
	Tolerance area	Boundaries	x = 0.345 x = 0.405	y = 0.150 + 0.640 x y = 0.050 + 0.750 x
		Intersection points	x = 0.345	y = 0.371
			x = 0.405	y = 0.409
			x = 0.405	y = 0.354
			x = 0.345	y = 0.309
Objective Luminous flux		lm	2000 ± 300	2000 ± 100
Hot-restrike switch-off time		s	10	10

1/ The part of the bulb within the angles α1 and α2 shall be the light emitting part. This part shall be as homogeneous in form as possible and shall be optically distortion free. This applies to the whole bulb circumference within the angles α1 and α2.

2/ Wattage of gas discharge light source with ballast integrated.

Position of the electrodes

This test is used to determine whether the electrodes are correctly positioned relative to the reference axis and the reference plane.

Top view (schematic):

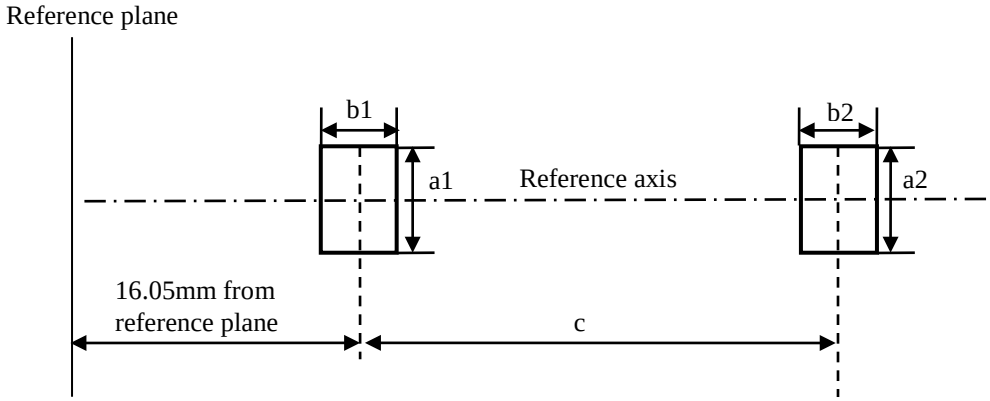

Side view (schematic):

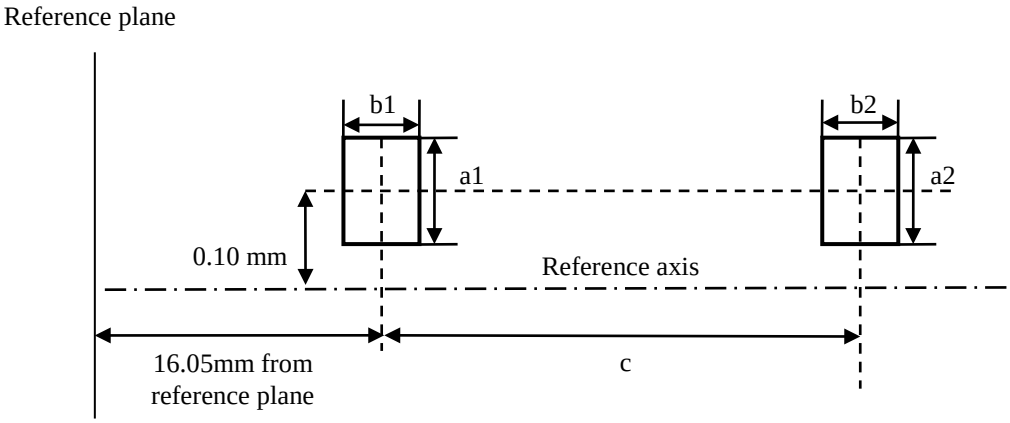

Measuring direction: light source side and top view

Dimension in mm	*Production light sources*	*Standard light sources*
a1	0.30	0.20
a2	0.50	0.25
b1	0.30	0.15
b2	0.60	0.30
c	3.90	3.90

The arc attachment point to the electrode nearest to the reference plane shall be positioned in the area defined by a1 and b1. The arc attachment point to the electrode furthest from the reference plane shall be positioned in the area defined by a2 and b2.

Category D5S **Sheet D5S/5**

Position and form of the arc

This test is used to determine the form of the arc and its position relative to the reference axis and the reference plane by measuring its bending and diffusion in the cross section at a distance 18.0 mm from the reference plane.

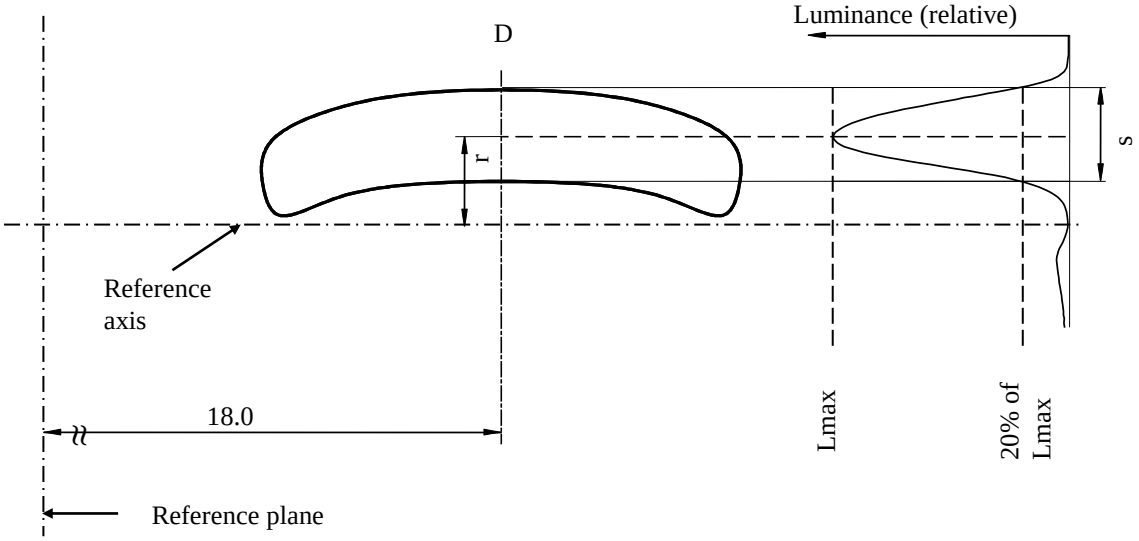

Relative luminance distribution in the central cross section D.

The form of the arc is for illustration purpose only.

Measuring direction: light source side view

When measuring the relative luminance distribution in the central cross section as indicated in the drawing above, the maximum value shall be located within the distance r from the reference axis. The point of 20 per cent of the maximum value shall be within s.

Dimension in mm	*Production light sources*	*Standard light sources*
r (arc bending)	0.50 +/-0.25	0.50 +/-0.15
s (arc diffusion)	0.70 +/-0.25	0.70 +/-0.15

The drawings are intended only to illustrate the essential dimensions (in mm) of the gas-discharge light source

Figure 1
Main drawing of category D6S - Cap P32d-1

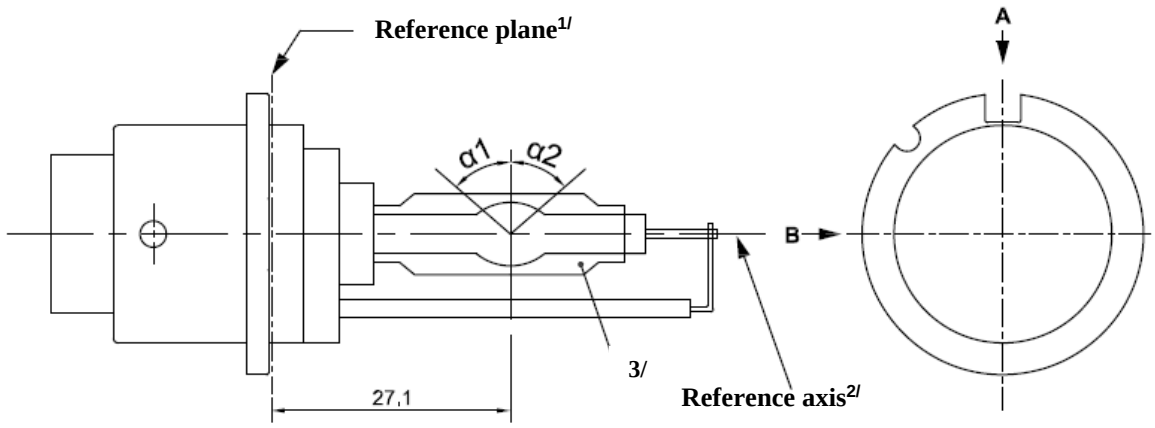

1/ The reference plane is defined by the positions on the surface of the holder on which the three supporting bosses of the cap ring will rest.

2/ See sheet D6S/2.

3/ When measured at a distance of 27.1 mm from the reference plane and with respect to the mid-point of the inner bulb, the outer bulb shall have an eccentricity of 1 mm max.

Figure 2
Definition of reference axis[1/]

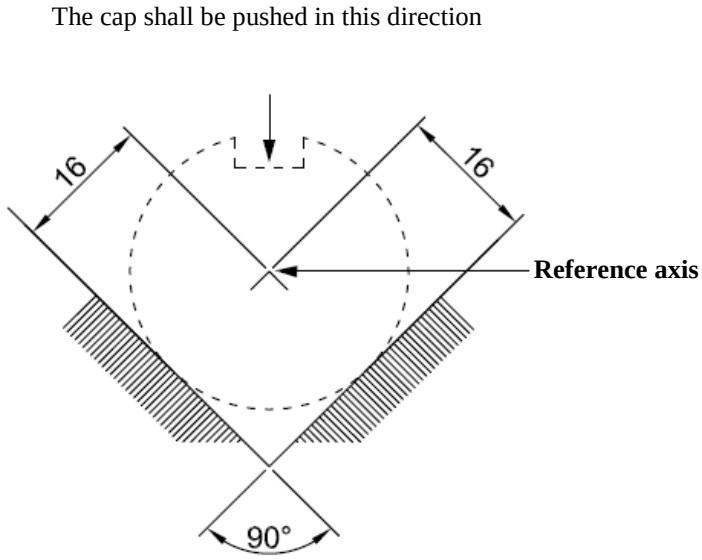

Figure 3
Maximum gas discharge light source outline[2/]

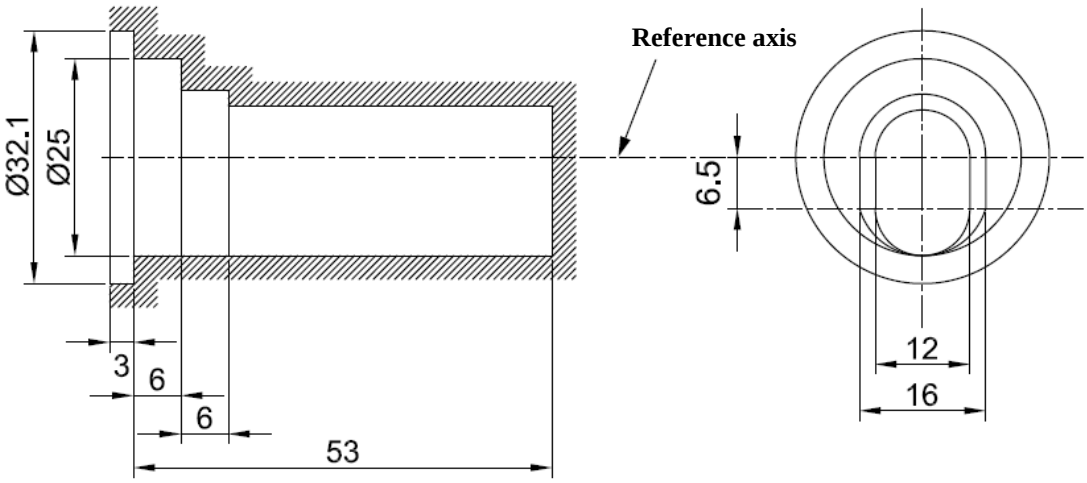

1/ The reference axis is perpendicular to the reference plane and crosses the intersection of the two parallel lines as indicated in figure 2.

2/ Glass bulb and supports shall not exceed the envelope, as indicated in figure 3. The envelope is concentric with the reference axis.

Category D6S **Sheet D6S/3**

Dimensions			*Production light sources*	*Standard light sources*
Position of the electrodes			Sheet D6S/4	
Position and form of the arc			Sheet D6S/5	
α1, α2[1/]			55° min.	55° min.
D6S: Cap P32d-1 in accordance with IEC Publication 60061 (sheet 7004-111-5)				
Electrical and photometric characteristics				
Rated voltage of the ballast		V	12[2/]	12
Rated wattage		W	25	25
Test voltage		V	13.2	13.2
Objective gas discharge light source voltage		V	42 ± 9	42 ± 4
Objective gas discharge light source wattage		W	25± 3	25± 0.5
Objective Luminous flux		lm	2000 ± 300	2000 ± 100
Chromaticity coordinates	Objective		x = 0.375	y = 0.375
	Tolerance area	Boundaries	x = 0.345 x = 0.405	y = 0.150 + 0.640 x y = 0.050 + 0.750 x
		Intersection points	x = 0.345	y = 0.371
			x = 0.405	y = 0.409
			x = 0.405	y = 0.354
			x = 0.345	y = 0.309
Hot-restrike switch-off time		s	10	10

1/ The part of the bulb within the angles α1 and α2 shall be the light emitting part. This part shall be as homogeneous in form as possible and shall be optically distortion free. This applies to the whole bulb circumference within the angles α1 and α2.

2/ Application voltages of ballasts may differ from 12 V.

Category D6S **Sheet D6S/4**

Position of the electrodes

This test is used to determine whether the electrodes are correctly positioned relative to the reference axis and the reference plane.

Top view (schematic):

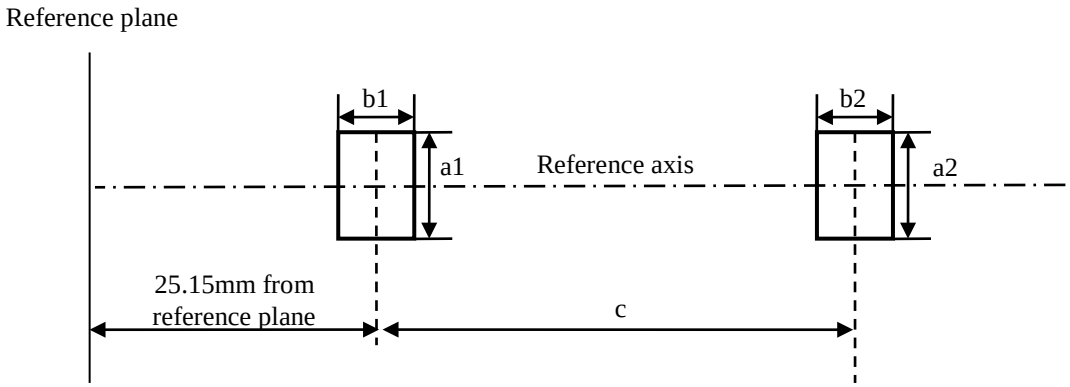

Side view (schematic):

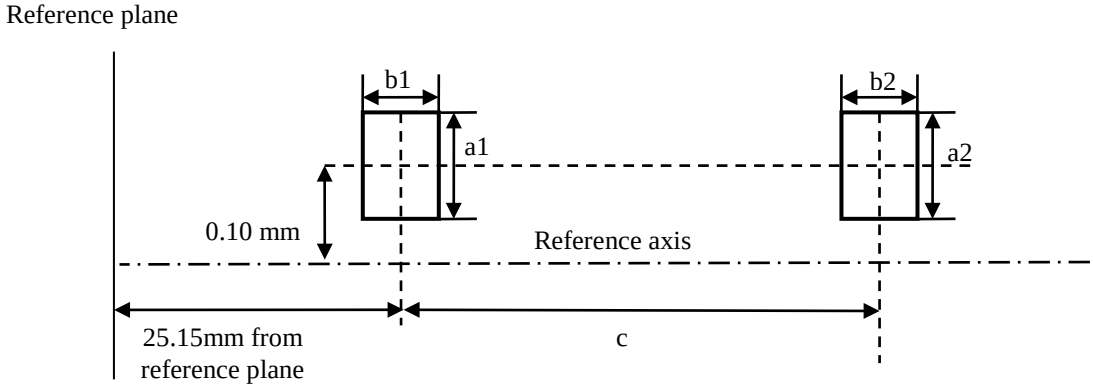

Measuring direction: light source side and top view

Dimension in mm	*Production light sources*	*Standard light sources*
a1	0.30	0.20
a2	0.50	0.25
b1	0.30	0.15
b2	0.60	0.30
c	3.90	3.90

The arc attachment point to the electrode nearest to the reference plane shall be positioned in the area defined by a1 and b1. The arc attachment point to the electrode furthest from the reference plane shall be positioned in the area defined by a2 and b2.

Position and form of the arc

This test is used to determine the form of the arc and its position relative to the reference axis and the reference plane by measuring its bending and diffusion in the cross section at a distance 27.1 mm from the reference plane.

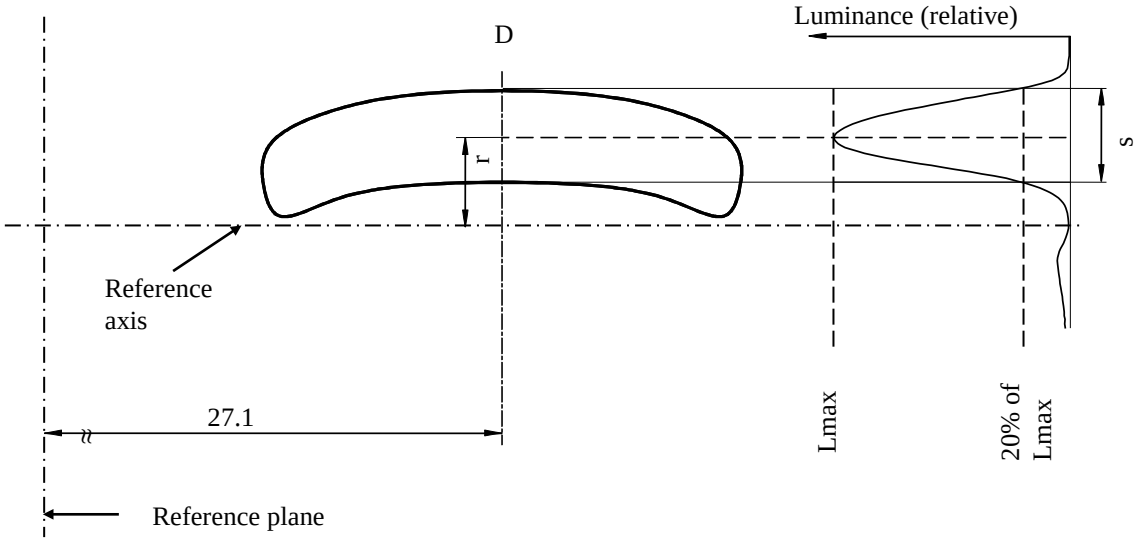

Relative luminance distribution in the central cross section D.

The form of the arc is for illustration purpose only.

Measuring direction: light source side view

When measuring the relative luminance distribution in the central cross section as indicated in the drawing above, the maximum value shall be located within the distance r from the reference axis. The point of 20 per cent of the maximum value shall be within s.

Dimension in mm	*Production light sources*	*Standard light sources*
r (arc bending)	0.50 +/-0.25	0.50 +/-0.15
s (arc diffusion)	0.70 +/-0.25	0.70 +/-0.15

Category D8R **Sheet D8R/1**

The drawings are intended only to illustrate the essential dimensions (in mm)
of the gas-discharge light source

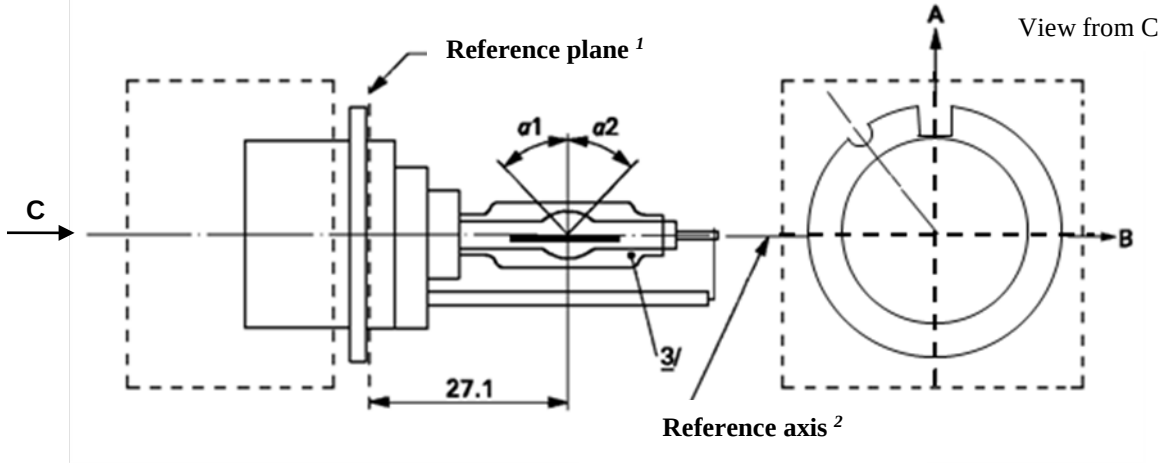

Figure 1
Main drawing of category D8R - Cap PK32d-8

1 The reference plane is defined by the positions on the surface of the holder on which the three supporting bosses of the cap ring will rest.

2 See sheet D8R/2.

3 When measured at a distance of 27.1 mm from the reference plane and with respect to the mid-point of the inner bulb, the outer bulb shall have an eccentricity of 1 mm max.

The cap shall be pushed in this direction

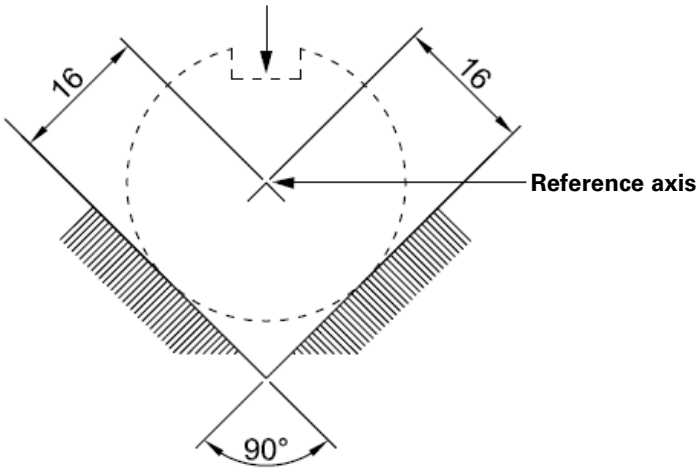

Figure 2
Definition of reference axis[1]

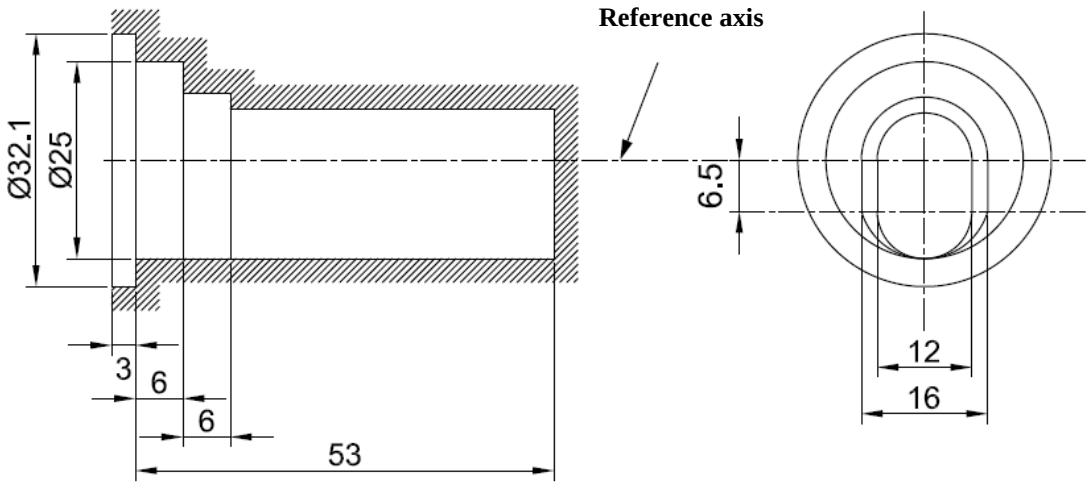

Figure 3
Maximum gas discharge light source outline[2]

1 The reference axis is perpendicular to the reference plane and crosses the intersection of the two parallel lines as indicated in figure 2.

2 Glass bulb and supports shall not exceed the envelope, as indicated in figure 3.The envelope is concentric with the reference axis.

Category D8R **Sheet D8R/3**

Dimensions			*Production light sources*	*Standard light sources*
Position of the electrodes			Sheet D8R/4	
Position and form of the arc			Sheet D8R/5	
α1[1]			55° min.	
α2[1]			55° min.	
D8R: Cap PK32d-8 in accordance with IEC Publication 60061(sheet 7004-111-5)				
Electrical and photometric characteristics				
Rated voltage of the ballast		V	12 [2]	12
Rated wattage		W	25	25
Test voltage		V	13.2	13.2
Objective gas discharge light source voltage		V	42 ± 9	42 ± 4
Objective gas discharge light source wattage		W	25 ± 3	25 ± 0.5
Objective Luminous flux		lm	1900 ± 300	1900 ± 100
Chromaticity coordinates	Objective		x = 0.375	y = 0.375
	Tolerance area	Boundaries	x = 0.345 x = 0.405	y = 0.150 + 0.640 x y = 0.050 + 0.750 x
		Intersection points	x = 0.345	y = 0.371
			x = 0.405	y = 0.409
			x = 0.405	y = 0.354
			x = 0.345	y = 0.309
Hot-restrike switch-off time		s	10	10

[1] The part of the bulb within the angles α1 and α2 shall be the light emitting part. This part shall be as homogeneous in form as possible and shall be optically distortion free. This applies to the whole bulb circumference within the angles α1 and α2 except for the black stripes.

[2] Application voltages of ballasts may differ from 12 V.

Position of the electrodes

This test is used to determine whether the electrodes are correctly positioned relative to the reference axis and the reference plane.

Top view (schematic):

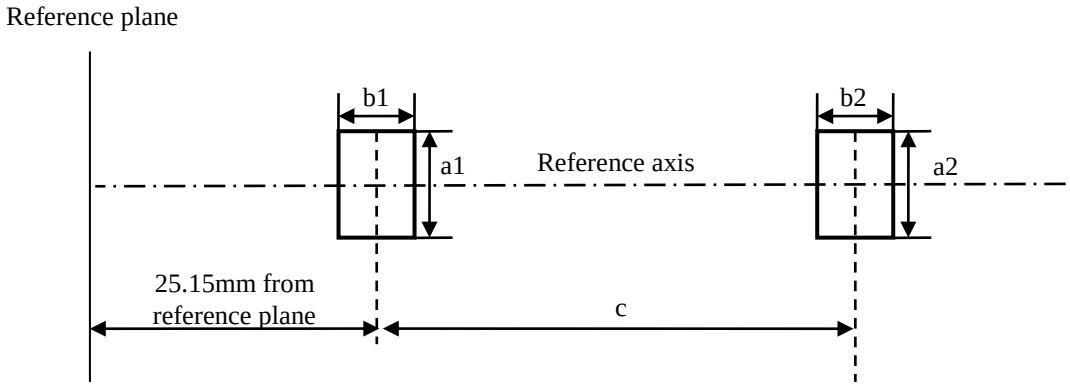

Side view (schematic):

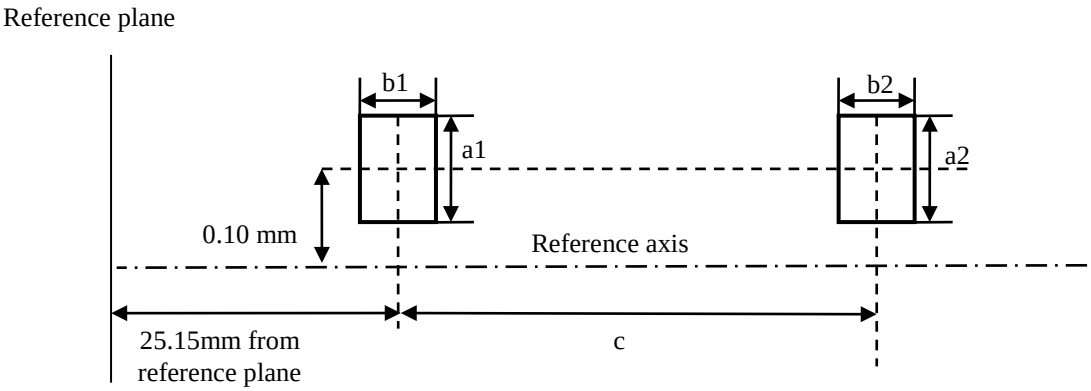

Measuring direction: light source side and top view

Dimension in mm	*Production light sources*	*Standard light sources*
a1	0.50	0.20
a2	0.70	0.35
b1	0.40	0.15
b2	0.80	0.30
c	3.90	3.90

The arc attachment point to the electrode nearest to the reference plane shall be positioned in the area defined by a1 and b1. The arc attachment point to the electrode furthest from the reference plane shall be positioned in the area defined by a2 and b2.

Category D8R **Sheet D8R/5**

Position and form of the arc

This test is used to determine the form of the arc and its position relative to the reference axis and the reference plane by measuring its bending and diffusion in the cross section at a distance 27.1 mm from the reference plane.

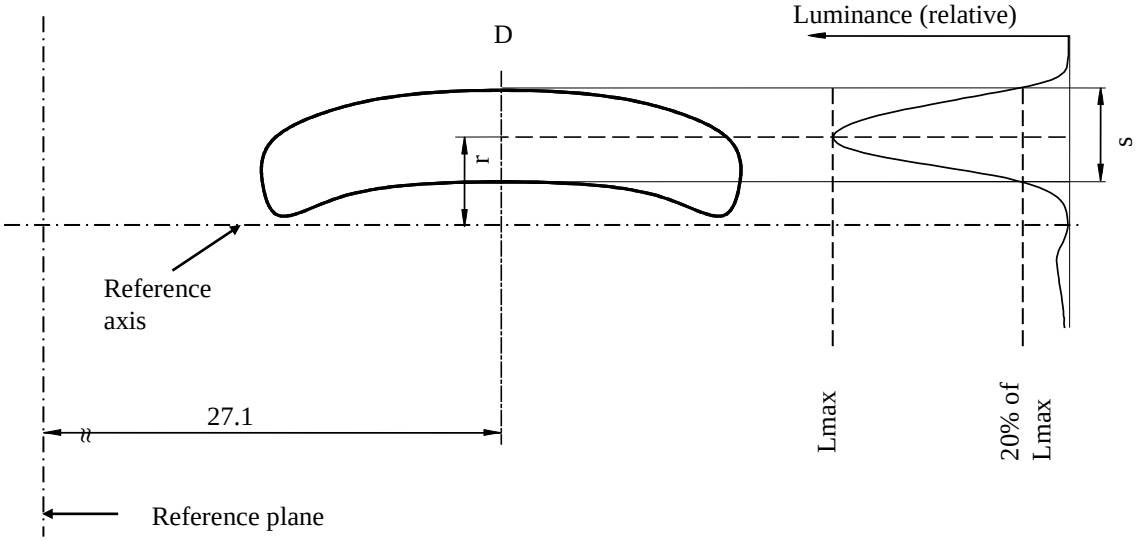

Relative luminance distribution in the central cross section D.

The form of the arc is for illustration purpose only.

Measuring direction: light source side view

When measuring the relative luminance distribution in the central cross section as indicated in the drawing above, the maximum value shall be located within the distance r from the reference axis. The point of 20 per cent of the maximum value shall be within s.

Dimension in mm	*Production light sources*	*Standard light sources*
r (arc bending)	0.50 +/- 0.25	0.50 +/- 0.15
s (arc diffusion)	0.70 +/- 0.25	0.70 +/- 0.15

Category D8R **Sheet D8R/6**

Position of black stripes

This test is used to determine whether the black stripes are correctly positioned relative to the reference axis and the reference plane.

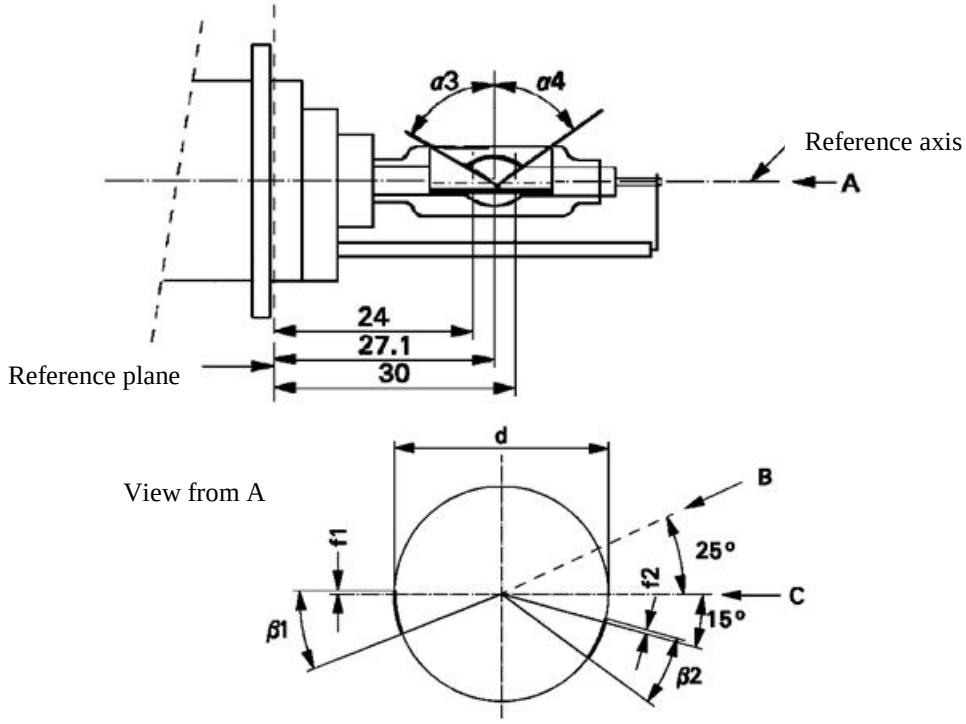

When measuring the luminance distribution of the arc in the central cross section as defined on sheet D8R/5, after having turned the light source so that the black stripe is covering the arc, the measured luminance shall be ≤ 0.5 % of Lmax.

Dimensions	*Production light sources*	*Standard light sources*
α3	70° min.	
α4	65° min.	
β1/24, β1/30, β2/24, β2/30	25° ± 5°	
f1/24, f2/24 [1]	0 ± 0.25	0 ± 0.20
f1/30 [1]	f1/24 mv ± 0.15 [2]	f1/24 mv ± 0.1
f2/30 [1]	f2/24 mv ± 0.15 [2]	f2/24 mv ± 0.1
f1/24 mv - f2/24 mv	± 0.3 max.	± 0.2 max.
d	9 ± 1	

1/ "f1/.." means dimension f1 to be measured at the distance from the reference plane indicated in mm after the stroke.

2/ "../24 mv" means the value measured at a distance of 24 mm from the reference plane.

Category D8S **Sheet D8S/1**

The drawings are intended only to illustrate the essential dimensions (in mm)

Figure 1
Main drawing of category D8S - Cap PK32d-1

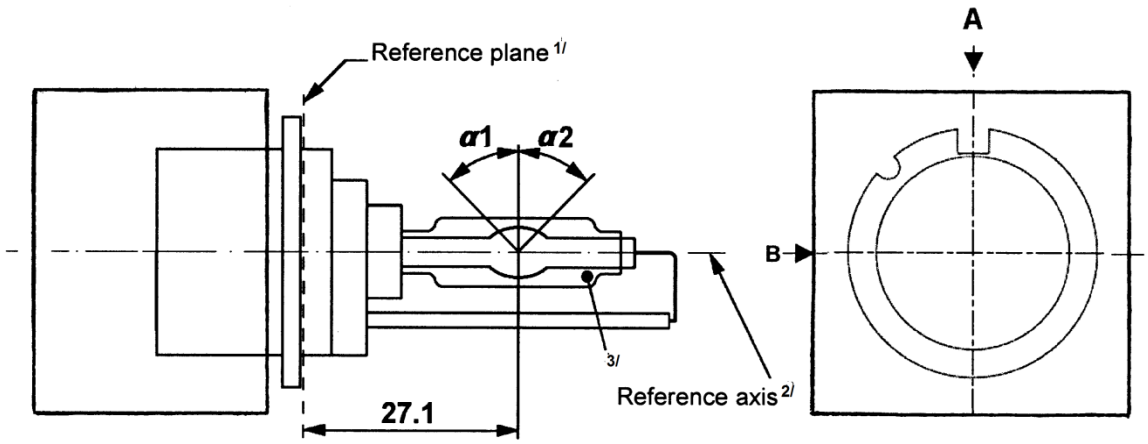

1/ The reference plane is defined by the positions on the surface of the holder on which the three supporting bosses of the cap ring will rest.
2/ See sheet D8S/2.
3/ When measured at a distance of 27.1 mm from the reference plane and with respect to the mid-point of the inner bulb, the outer bulb shall have an eccentricity of 1 mm max.

Figure 2
Definition of reference axis[1/]

The cap shall be pushed in this direction

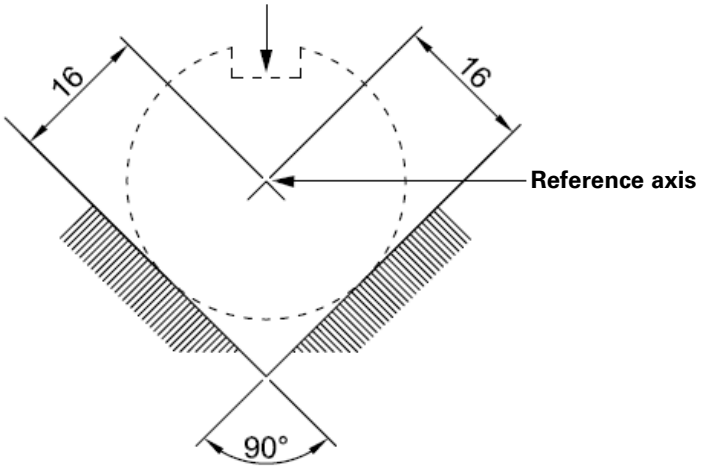

Figure 3
Maximum gas discharge light source outline[2/]

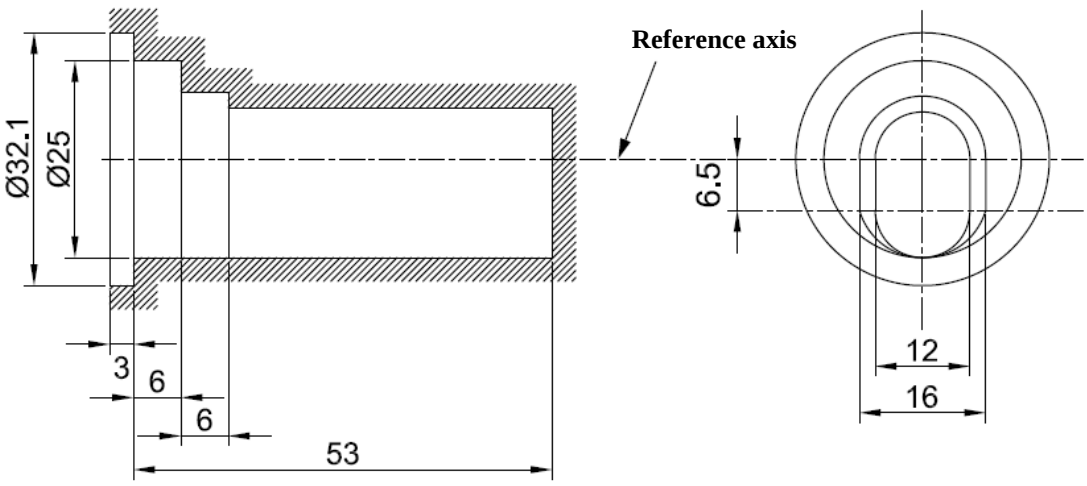

1/ The reference axis is perpendicular to the reference plane and crosses the intersection of the two parallel lines as indicated in figure 2.

2/ Glass bulb and supports shall not exceed the envelope, as indicated in figure 3.The envelope is concentric with the reference axis.

Category D8S **Sheet D8S/3**

Dimensions			*Production light sources*	*Standard light sources*
Position of the electrodes			Sheet D8S/4	
Position and form of the arc			Sheet D8S/5	
α1, α2[1/]			55° min.	55° min.
D8S: Cap PK32d-1 in accordance with IEC Publication 60061 (sheet 7004-111-5)				
Electrical and photometric characteristics				
Rated voltage of the ballast		V	12[2/]	12
Rated wattage		W	25	25
Test voltage		V	13.2	13.2
Objective gas discharge light source voltage		V	42 ± 9	42 ± 4
Objective gas discharge light source wattage		W	25 ± 3	25 ± 0.5
Objective Luminous flux		lm	2000 ± 300	2000 ± 100
Chromaticity coordinates	Objective		x = 0.375	y = 0.375
	Tolerance area	Boundaries	x = 0.345 x = 0.405	y = 0.150 + 0.640 x y = 0.050 + 0.750 x
		Intersection points	x = 0.345	y = 0.371
			x = 0.405	y = 0.409
			x = 0.405	y = 0.354
			x = 0.345	y = 0.309
Hot-restrike switch-off time		s	10	10

1/ The part of the bulb within the angles α1 and α2 shall be the light emitting part. This part shall be as homogeneous in form as possible and shall be optically distortion free. This applies to the whole bulb circumference within the angles α1 and α2.

2/ Application voltages of ballasts may differ from 12 V.

Position of the electrodes

This test is used to determine whether the electrodes are correctly positioned relative to the reference axis and the reference plane.

Top view (schematic):

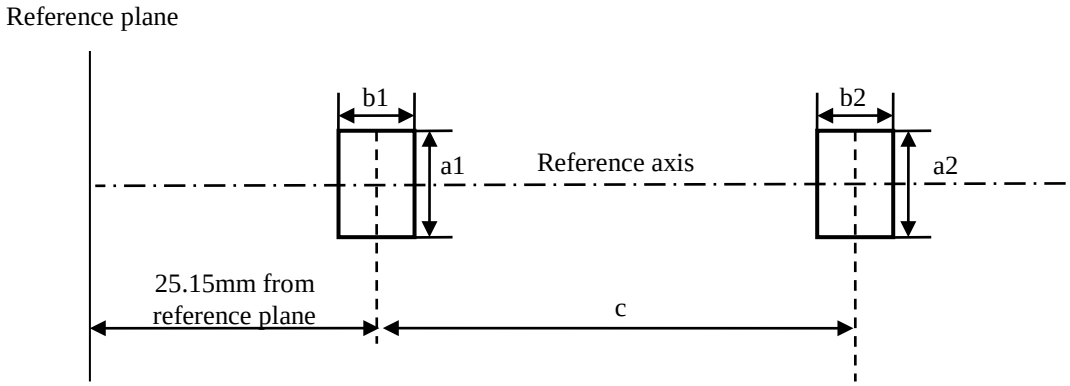

Side view (schematic):

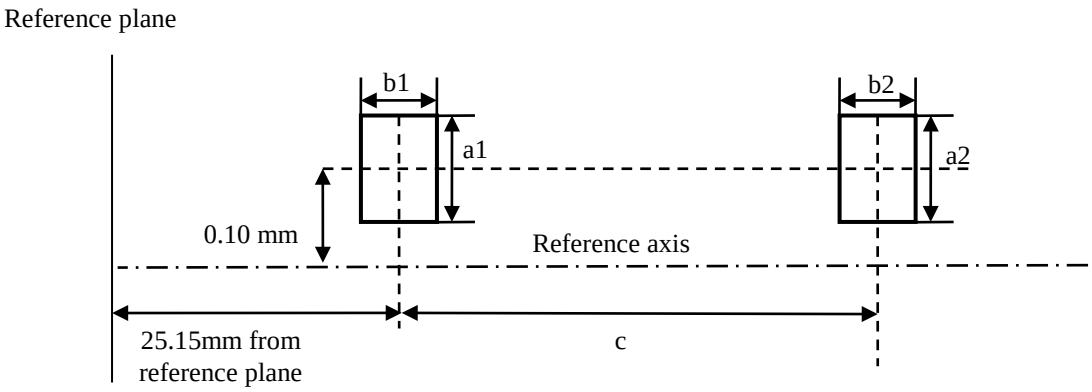

Measuring direction: light source side and top view

Dimension in mm	*Production light sources*	*Standard light sources*
a1	0.30	0.20
a2	0.50	0.25
b1	0.30	0.15
b2	0.60	0.30
c	3.90	3.90

The arc attachment point to the electrode nearest to the reference plane shall be positioned in the area defined by a1 and b1. The arc attachment point to the electrode furthest from the reference plane shall be positioned in the area defined by a2 and b2.

Category D8S **Sheet D8S/5**

Position and form of the arc

This test is used to determine the form of the arc and its position relative to the reference axis and the reference plane by measuring its bending and diffusion in the cross section at a distance 27.1 mm from the reference plane.

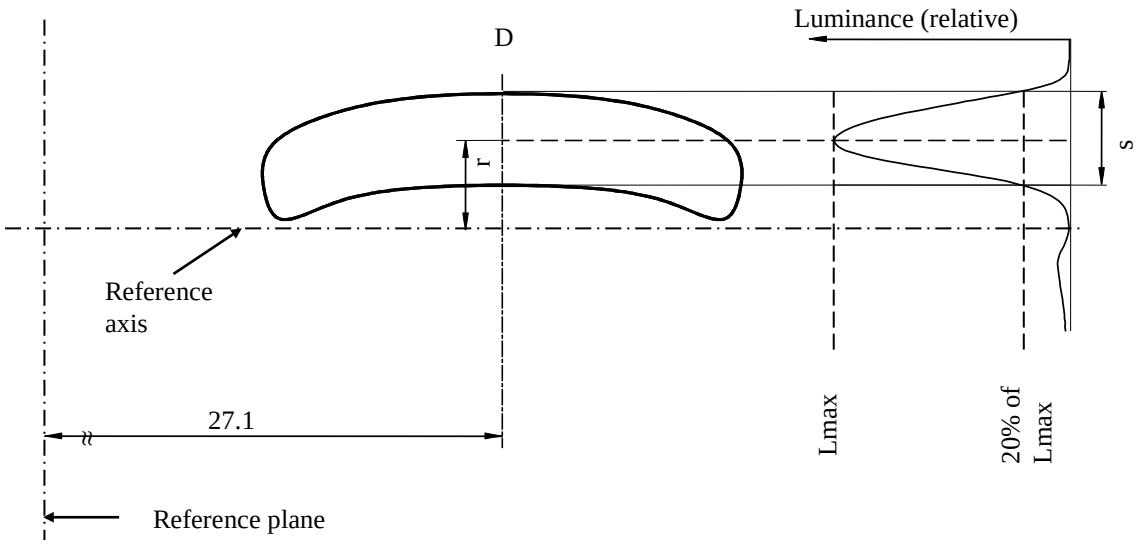

Relative luminance distribution in the central cross section D.

The form of the arc is for illustration purpose only.

Measuring direction: light source side view

When measuring the relative luminance distribution in the central cross section as indicated in the drawing above, the maximum value shall be located within the distance r from the reference axis. The point of 20 per cent of the maximum value shall be within s.

Dimension in mm	*Production light sources*	*Standard light sources*
r (arc bending)	0.50 +/- 0.25	0.50 +/- 0.15
s (arc diffusion)	0.70 +/- 0.25	0.70 +/- 0.15

The drawings are intended only to illustrate the essential dimensions (in mm)

Figure 1
Main drawing of category D9S - Cap PK32d-9

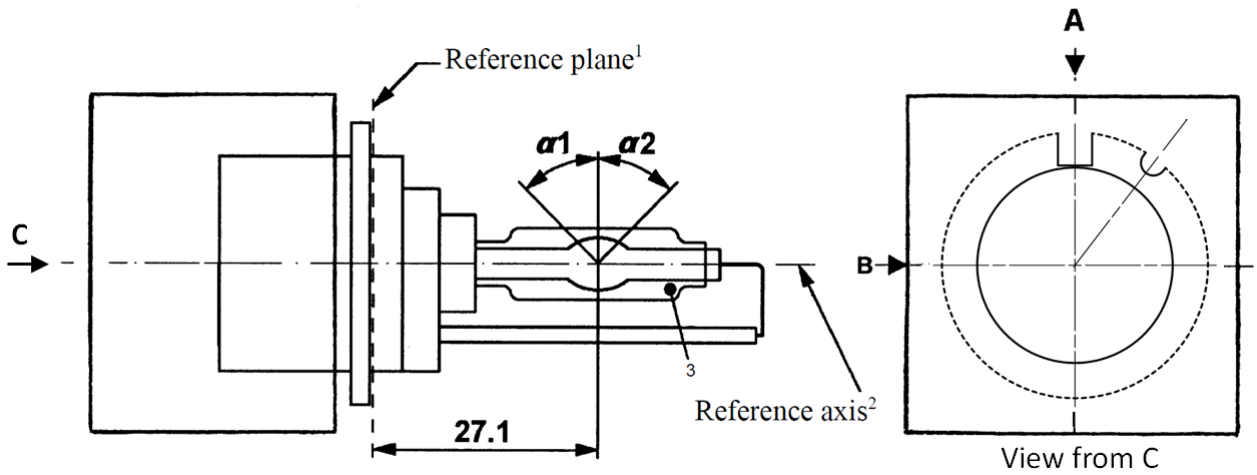

[1] The reference plane is defined by the positions on the surface of the holder on which the three supporting bosses of the cap ring will rest.

[2] See sheet D9S/2.

[3] When measured at a distance of 27.1 mm from the reference plane and with respect to the mid-point of the inner bulb, the outer bulb shall have an eccentricity of 1 mm max.

Figure 2
Definition of reference axis[1]

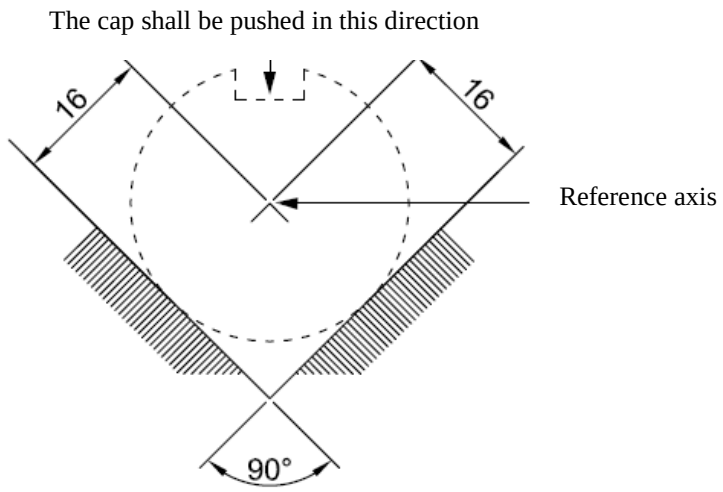

Figure 3
Maximum gas discharge light source outline[2]

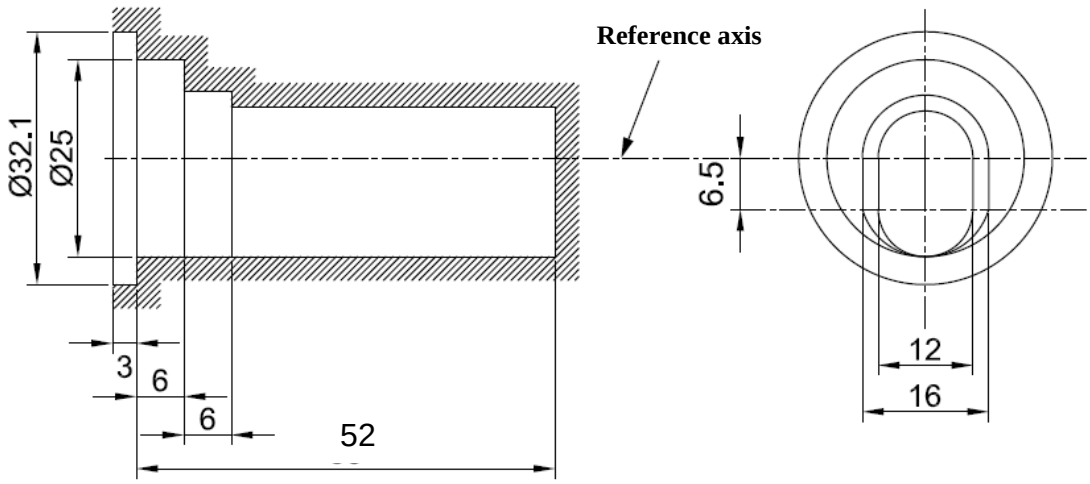

[1] The reference axis is perpendicular to the reference plane and crosses the intersection of the two parallel lines as indicated in figure 2.

[2] Glass bulb and supports shall not exceed the envelope, as indicated in figure 3.The envelope is concentric with the reference axis.

Category D9S **Sheet D9S/3**

Dimensions			*Production light sources*		*Standard light sources*	
Position of the electrodes			Sheet D9S/4			
Position and form of the arc			Sheet D9S/5			
α1, α2 [1]			55° min.		55° min.	
D9S: Cap PK32d-9 in accordance with IEC Publication 60061 (sheet 7004-111-5)						
Electrical and photometric characteristics						
Rated voltage of the ballast		V	12 [2]		12	
Rated wattage		W	27	35	27	35
Test voltage		V	13.5		13.5	
Objective gas discharge light source voltage		V	34 ± 6	38 ± 8	34 ± 4	38 ± 4
Objective gas discharge light source wattage		W	27 ± 3	35 ± 3	27 ± 0.5	35 ± 0.5
Objective Luminous flux		lm	2000 ± 300	3000 ± 450	2000 ± 100	3000 ± 150
Chromaticity coordinates	Objective		x = 0.375		y = 0.375	
	Tolerance area	Boundaries	x = 0.345 x = 0.405		y = 0.150 + 0.640 x y = 0.050 + 0.750 x	
		Intersection points	x = 0.345		y = 0.371	
			x = 0.405		y = 0.409	
			x = 0.405		y = 0.354	
			x = 0.345		y = 0.309	
Hot-restrike switch-off time		s	10		10	

[1] The part of the bulb within the angles α1 and α2 shall be the light emitting part. This part shall be as homogeneous in form as possible and shall be optically distortion free. This applies to the whole bulb circumference within the angles α1 and α2.

[2] Application voltages of ballasts may differ from 12 V.

Category D9S **Sheet D9S/4**

Position of the electrodes

This test is used to determine whether the electrodes are correctly positioned relative to the reference axis and the reference plane.

Side and top view (schematic):

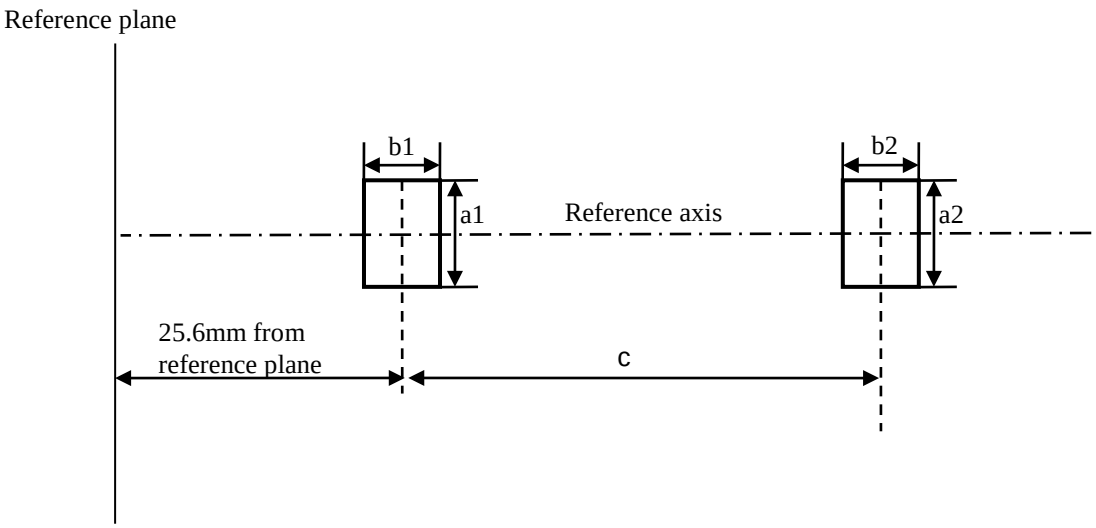

Measuring direction: light source side and top view

Dimension in mm	*Production light sources*	*Standard light sources*
a1	0.30	0.20
a2	0.50	0.25
b1	0.30	0.15
b2	0.60	0.30
c	3.00	3.00

The arc attachment point to the electrode nearest to the reference plane shall be positioned in the area defined by a1 and b1. The arc attachment point to the electrode furthest from the reference plane shall be positioned in the area defined by a2 and b2. The geometrical data is valid for 27W and 35W operation.

Position and form of the arc

This test is used to determine the form of the arc and its position relative to the reference axis and the reference plane by measuring its bending and diffusion in the cross section at a distance 27.1 mm from the reference plane.

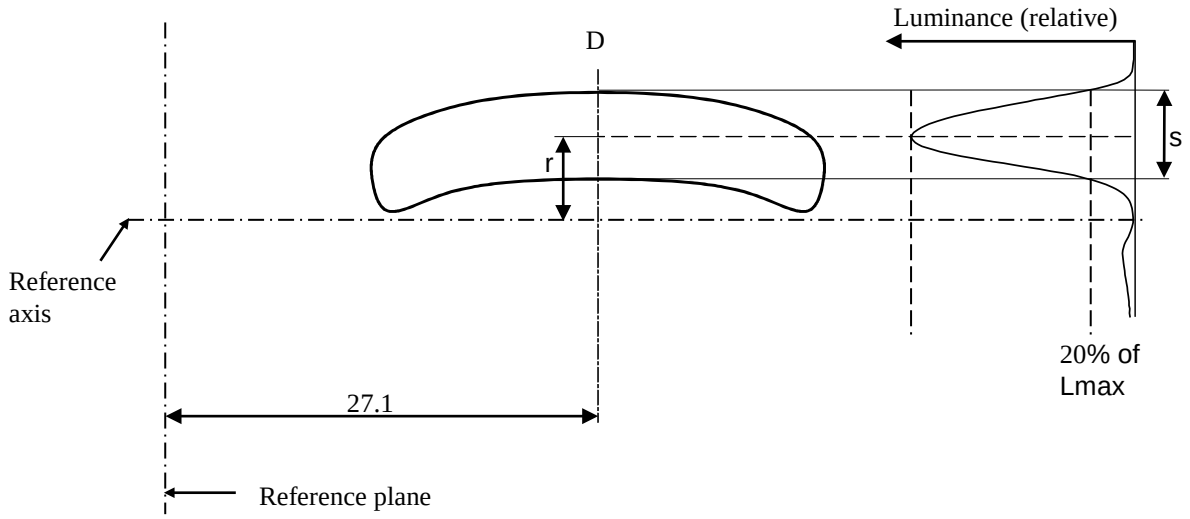

Relative luminance distribution in the central cross section D.

The form of the arc is for illustration purpose only.

Measuring direction: light source side view

When measuring the relative luminance distribution in the central cross section as indicated in the drawing above, the maximum value shall be located within the distance r from the reference axis. The point of 20 per cent of the maximum value shall be within s. The geometrical data is valid for 27W and 35W operation.

Dimension in mm	*Production light sources*	*Standard light sources*
r (arc bending)	0.35 +/- 0.25	0.35 +/- 0.15
s (arc diffusion)	0.80 +/- 0.25	0.80 +/- 0.15

Annex 3

Sheets for LED light sources

List of sheets for LED light sources and their sequence in this annex:

Sheet number(s)
LR1/1 to 5
LW2/1 to 5
L3/1 to 6
LR4/1 to 5
L5/1 to 6

The drawings are intended only to illustrate the essential dimensions (in mm) of the LED light source

Figure 1
Main drawing

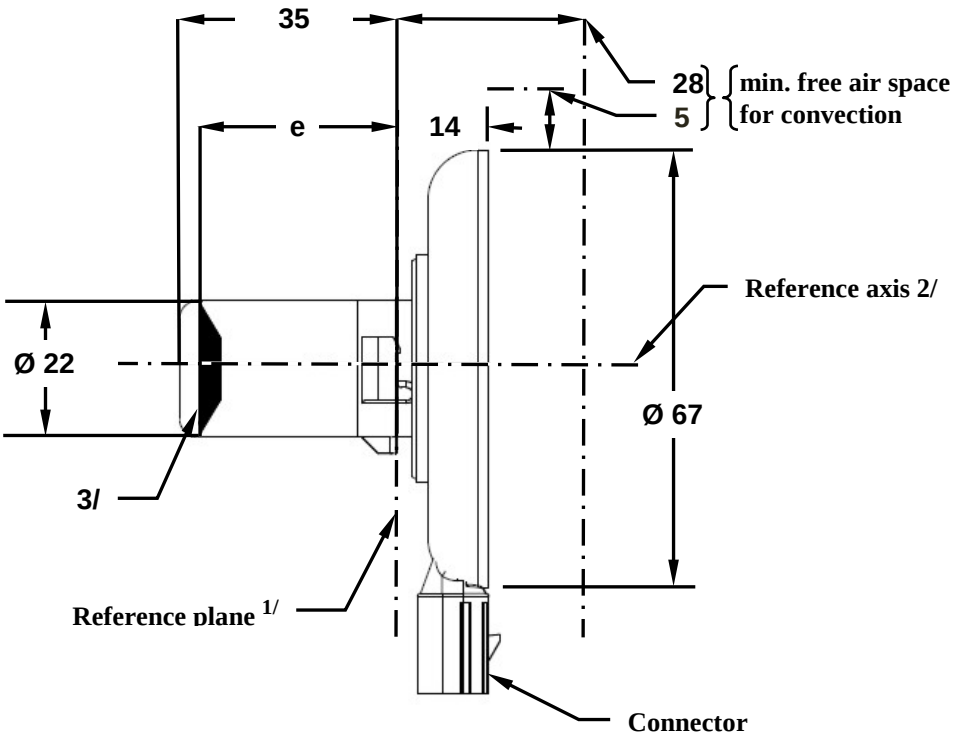

Figure 2
Connector detail

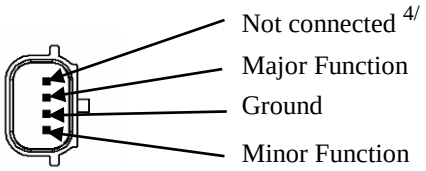

1/ The reference plane is the plane defined by the contact points of the cap-holder fit.
2/ The reference axis is perpendicular to the reference plane and passing through the centre of the bayonet core.
3/ Light emitting area: to be checked by means of the box system in Figure 3.
4/ Optional pin.

Table 1
Essential dimensional, electrical and photometric characteristics

Dimensions in mm		*Tolerance*			
		LED light sources of normal production		*Standard LED light source*	
e [3/ 7/]	24.0	0.2		0.1	
Cap PGJ21t-1 in accordance with IEC Publication 60061 (sheet 7004-165-1)					
Electrical and photometric characteristics [5/]					
Rated values		*Minor function*	*Major function*	*Minor function*	*Major function*
	Volts	12		12	
Objective Values [6/]	Watts (at 13.5 V DC)	0.75 max.	3.5 max. 1.4 min.	0.75 max.	3.5 max. 1.4 min.
	Luminous flux (in lm at 13.5V DC)			3.5 ± 10%	47 ± 10%
	Luminous flux (in lm at 10-16 V DC)	3.5 ± 20%	47 ± 20%		

[5/] The emitted light shall be red.
[6/] Continuous on for 30 minutes at 23 ± 2.5° C.
[7/] Light centre length.

Failure condition behaviour

In case of LED light source failure (no light emitted) the maximum current draw – when operated within the input voltage range in major function mode – operation shall be less than 20 mA (open circuit condition).

Screen projection requirements

The following test is intended to define the requirements for the light emitting area of the LED light source and to determine whether the light emitting area is correctly positioned relative to the reference axis and reference plane in order to check compliance with the requirements.

The position of the light emitting area is checked by the box system defined in Figure 3, which shows the projections when viewing along direction γ=90º in the planes C_{90} and C_{180} (C, γ as defined in Figure 4). At least 95 per cent of the luminous flux emitted into the viewing direction has to come from the trapezoidal area defined by d1, d2 and c. Less than 70 per cent of the luminous flux shall be emitted from the rectangular area defined by d3 and c.

Figure 3
Box definition of the light emitting area

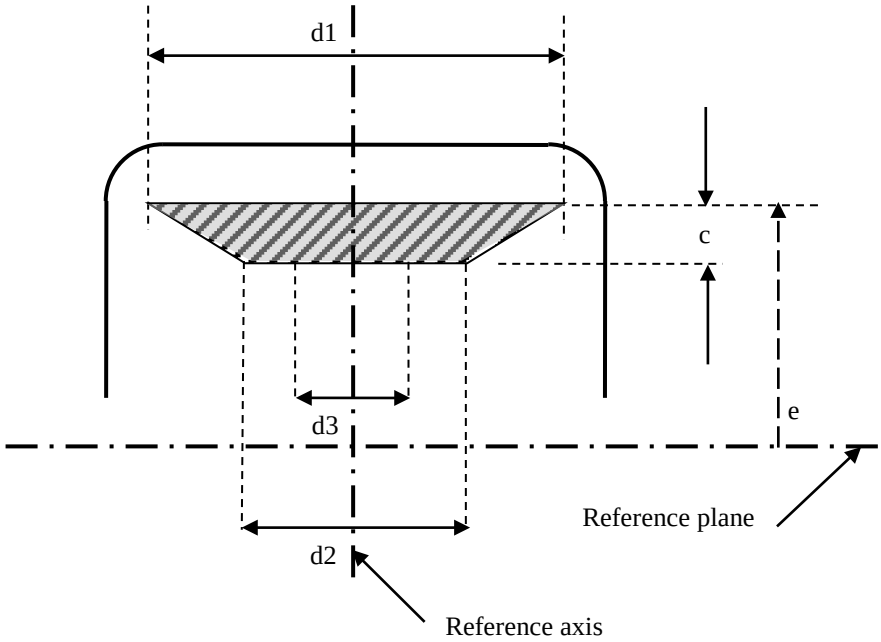

Table 2
Dimensions of the box system in Figure 3

Dimensions in mm	*e*	*c*	*d1*	*d2*	*d3*
LED light sources of normal production	24.0 + 0.2	3.6	21.0	15.0	7.0
Standard (etalon) LED light sources	24.0 + 0.1	3.4	21.0	15.0	7.0

Normalized luminous intensity distribution

The following test is intended to determine the normalized luminous intensity distribution of the LED light source in an arbitrary plane containing the reference axis. The intersection of the reference axis and the upper edge of the box is used as the coordinate system origin.

The LED light source is mounted on a flat plate with the corresponding mounting lug features. The plate is mounted to the goniometer table by a bracket, so that the reference axis of the LED light source lines up with one of the rotating axis of the goniometer. The corresponding measurement set-up is described in Figure 4.

The drawings are intended only to illustrate the essential set-up for measurement of the LED light source

Figure 4
Set-up to measure the luminous intensity distribution

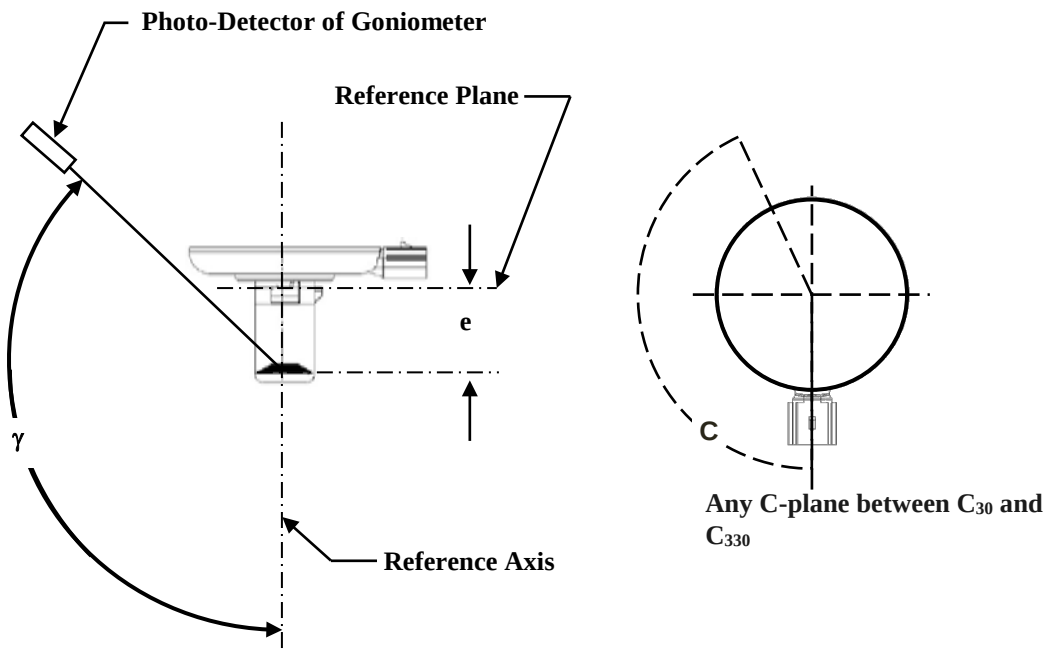

Luminous intensity data is recorded for the major function with a standard photo-goniometer. The measurement distance should be chosen appropriately, to make sure that the detector is located in the far field of the light distribution.

The measurements shall be performed in 3 C-planes, which contain the reference axis of the LED light source. The 3 C-planes shall be within C_{30} and C_{330} to avoid the connector shadows and they have to be at least 30º apart from each other. The test points for each plane for multiple polar angles γ are specified in Table 3.

The measured luminous intensity values, normalised to the measured luminous flux of the individual LED light source under test, shall be converted to normalised luminous intensity values of a 1000 lm LED light source. The data shall comply with the tolerance band as defined in Table 3.

C-planes: see CIE publication 70-1987, "The measurement of absolute intensity distributions".

Table 3

Test point values of normalized intensity for the major function of normal production and standard LED light sources, respectively.

	LED light source of normal production		*Standard LED light source*	
γ	*Minimum intensity in cd /1000 lm*	*Maximum intensity in cd/1000 lm*	*Minimum intensity in cd /1000 lm*	*Maximum intensity in cd/1000 lm*
0°	0	30	0	20
15°	0	30	0	20
30°	0	70	0	40
45°	20	100	20	60
60°	35	120	35	80
75°	50	140	50	100
90°	70	160	70	120
105°	90	180	90	140
120°	110	200	110	160
135°	110	200	110	160
150°	90	180	90	140

The luminous intensity distribution as described in Table 3 shall be substantially uniform, i.e. in between two adjacent grid points the relative luminous intensity requirement is calculated by linear interpolation using the two adjacent grid points.

The drawings are intended only to illustrate the essential dimensions (in mm) of the LED light source

Figure 1
Main Drawing – front and side view

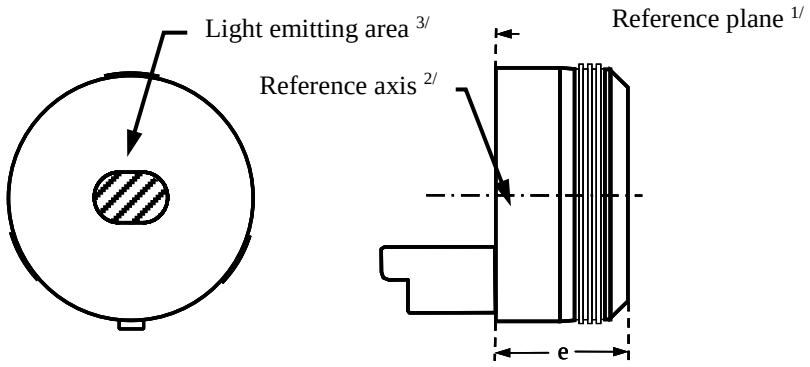

Figure 2 – Connector Detail

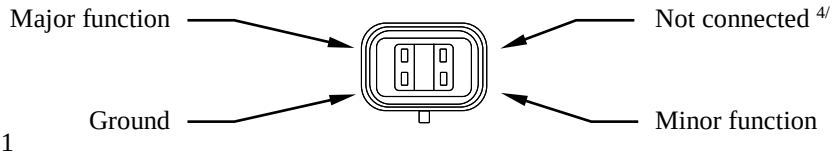

Table 1
Essential dimensional, electrical and photometric characteristics

Dimensions in mm		*Tolerances*			
		LED light sources of normal production		*Standard LED light sources*	
e 8/	26.4	0.2		0.1	
Cap PGJY50 in accordance with IEC Publication 60061 (sheet 7004-182-1)					
Electrical and photometric characteristics 5/					
Rated values		*Minor function*	*Major function*	*Minor function*	*Major function*
	Volts	12		12	
Objective Values 6/ 7/	Watts (at 13.5 V DC)	1 max.	12 max. 4 min.	1 max.	12 max. 4 min.
	Luminous flux (in lm at 13.5V DC)			50 ± 10%	725 ± 10%
	Luminous flux (in lm at 10-16 V DC)	50 ± 15%	725 ± 15%		
Corresponding base temperature T_b in °C		30 ± 2	55 ± 2	30 ± 0.5	55 ± 0.5

1/ The reference plane is given by the thermal transfer area on the backside of the LED light source.
2/ The reference axis is perpendicular to the reference plane and passing through the centre of the LED light source as defined by three notches on the outer perimeter.
3/ Light emitting area: to be checked by means of the box system in Figure 3.
4/ Optional pin.
5/ The emitted light shall be white.
6/ Continuous operation for 30 minutes with base temperature Tb stabilized as specified above.
7/ Luminous flux from the light emitting area shall be determined within a solid angle of $-40° < \alpha < +40°$ and $-40° < \beta < +40°$ using either integral methods or the procedure described on sheets LW2/3 and LW2/4.
8/ Light centre length.

Screen projection requirements
This test is intended to determine whether the light emitting area of the LED light source is correctly positioned relative to the reference axis and reference plane.

Compliance of position and dimension as defined in Table 2 is checked by the box system shown in Figure 3. The left drawing displays the projection when viewing along the reference axis with an aperture acceptance angle of ±40° while the right drawing defines the position of the reference plane and axis.

Size determination shall be done with suitable means.

Figure 3
Box definition of light emitting area

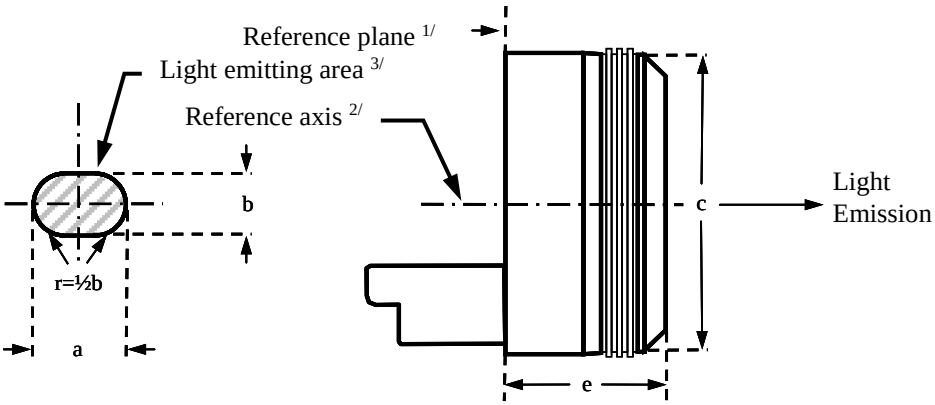

Table 2
Dimensions of the light emitting area in Figure 3

Dimensions in mm	*e*	*a*	*b*	*c*
LED light sources of normal production	26.4 ± 0.2	14.5 +0/ -2.5	10.1 +0/ -1.5	Ø 50.00 + 0.10/ -0
Standard (Etalon) LED light sources	26.4 ± 0.1	14.5 +0/ -2.5	10.1 +0/ -1.5	Ø 50.05 + 0.05/ -0

Cumulative luminous flux distribution

Measurement set-up

This test is intended to determine the cumulative luminous flux within defined solid angles of the luminous intensity distribution.

Goniophotometers of type I or II according to CIE publication No. 70 -1987 with the capability of turning the LED light source around two axes perpendicular to the axis of light emission can be used. The intersection of the reference axis and the parallel plane to the reference plane in distance e is used as the coordinate system origin.

Figure 4
Set-up to measure the luminous intensity distribution using a type I photogoniometer

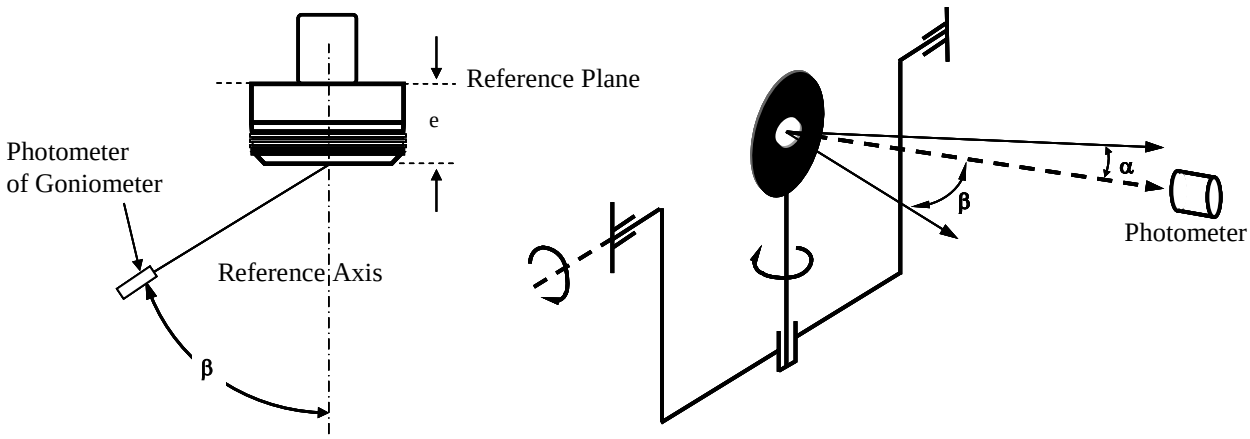

The LED light source is mounted on a flat plate with the corresponding mounting lug features. The plate is mounted to the goniometer table by a bracket in such way, that the reference axis of the LED light source lines up with the measurement axis of the goniometer. The corresponding measurement set-up is described in Figure 4.

Cumulative luminous flux distribution

Measurement and calculation procedure

Data shall be recorded for the specified base temperature T_b from Table 1 at the location shown in Fig. 5.

Luminous intensity distribution data shall be recorded within a solid angle of -40° < α < +40° and -40° < β < +40°. The measurement distance shall be chosen in such manner that the detector is located in the far field of the light distribution. An angular step size of 1° or less is required.

After the measurement, the cumulative luminous flux distribution shall be calculated from the recorded data for various solid angles as specified in Table 3 according to CIE publication 84-1989, section 4.3. Subsequently, the distribution shall be normalized to the total luminous flux determined for -40° < α < +40° and -40° < β < +40. The data shall comply with the tolerance band defined in Table 3.

In order to secure a symmetrical distribution within each solid angle in Table 3 the luminous flux determination shall be done independently for all 4 quadrants and flux values shall not differ by more than 15%.

Table 3
Test point values of normalized cumulative luminous flux for both normal production and standard LED light sources

Angle α, β	*Min. normalized flux in %*	*Max. normalized flux in %*
-5° < α, β < +5°	8	14
-10° < α, β < +10°	31	37
-15° < α, β < +15°	54	59
-20° < α, β < +20°	75	81
-25° < α, β < +25°	91	95
-30° < α, β < +30°	97	100
-35° < α, β < +35°	98	100
-40° < α, β < +40°	100 (by definition)	

The cumulative luminous flux distribution of the minor function may be verified by measuring the ratio of major and minor function under a fixed angle and multiplication of this factor with the luminous flux of the major function.

In case of doubt that cumulative luminous flux distributions of major and minor function differ, the procedure as described above for the major function shall be repeated for the minor function.

Thermal interface geometry

The LW2 thermal interface is located within the reference plane (shaded area in Figure 5) and described in detail in IEC Publication 60061 as indicated in Table 1 on sheet LW2/1. It shall be attached to an appropriate heat sink or thermal management system.

The luminous flux given in Table 1 shall be achieved once the base temperature T_b measured at the location shown in Figure 5 is stabilized.

Figure 5
Rear-view: thermal contact area and location of T_b-point on the vertical symmetry axis, at a distance f from the center

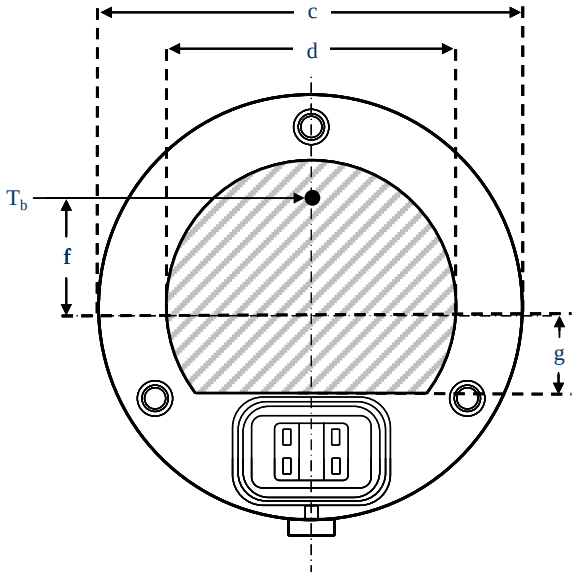

Dimensions in mm	
c	50.0
d	34.5
f	13.0
g	10.0

Failure condition behaviour

In case of LED light source failure (no light emitted) the maximum current draw – when operated within the input voltage range in major function mode – shall be less than 20 mA (open circuit condition).

The drawings are intended only to illustrate the essential dimensions of the LED light source.

Figure 1*
Main Drawing

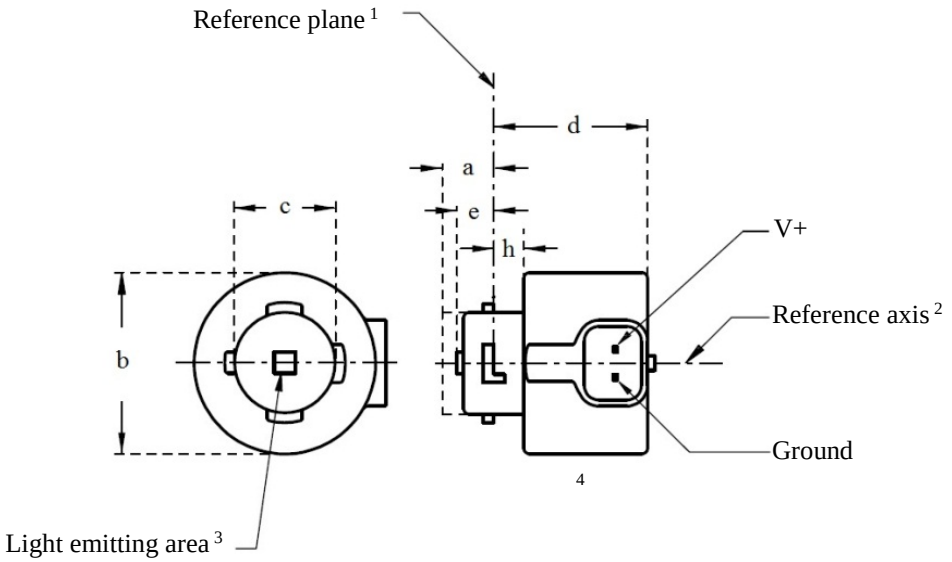

LR3A, LW3A, LY3A

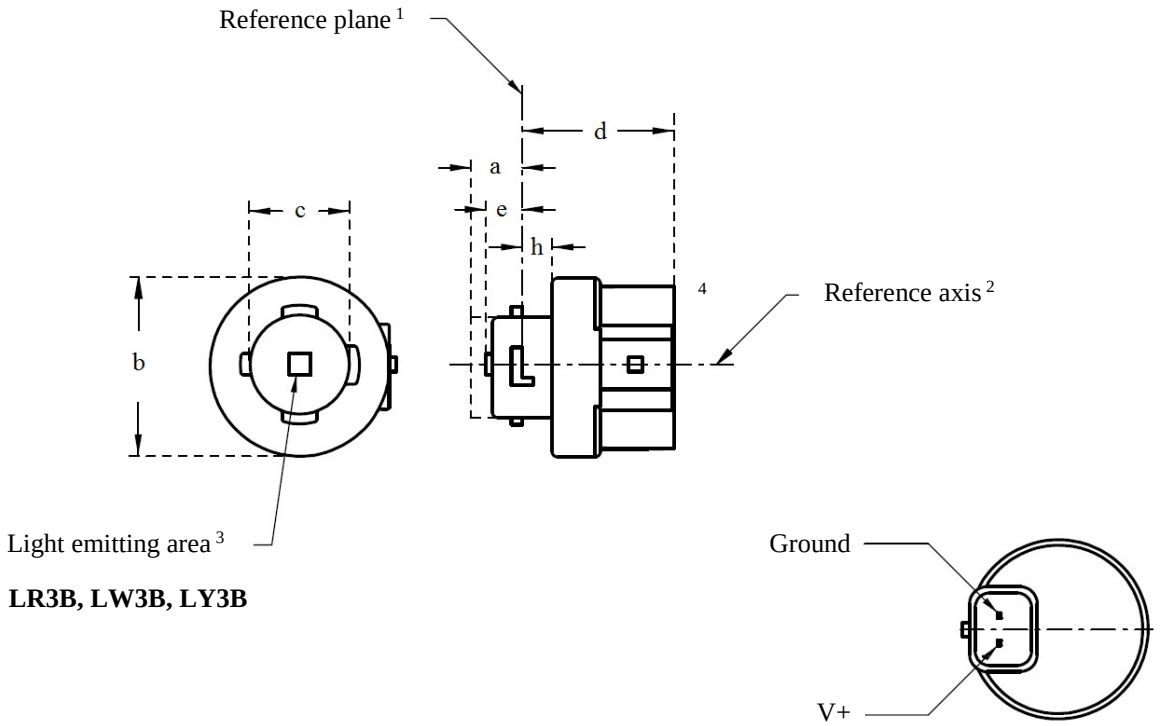

LR3B, LW3B, LY3B

For the notes see sheet L3/2.

* Projection method:

Categories LR3A, LR3B, LW3A, LW3B, LY3A and LY3B **Sheet L3/2**

Table 1
Essential dimensional, electrical and photometric characteristics of the LED light source

Dimensions			*Production LED light sources*	*Standard LED light sources*
a		mm	6.0 max.	
b		mm	c + 10.0 min. 38.0 max.	
c		mm	18.5 ± 0.1	
d		mm	28.0 max.	
e [13/]		mm	3.0 ± 0.30	3.0 ± 0.15
h		mm	5.5 + 0.0/ – 0.1	
Cap	LR3A, LR3B LW3A, LW3B LY3A, LY3B	PGJ18.5d-1 PGJ18.5d-24 PGJ18.5d-15	in accordance with IEC Publication 60061 (sheet 7004-185-1)	
Electrical and photometric characteristics				
Rated values	Volts		12	
	Watts	LR3A, LR3B	3	
		LW3A, LW3B LY3A, LY3B	4	
Objective Values[8]	Watts (at 13.5 V DC)	LR3A, LR3B	3.5 max.	
		LW3A, LW3B	5 max.	
		[12] LY3A, LY3B		
	Luminous flux (in lm at 13.5 V DC)	[5] LR3A, LR3B	80 ± 20%[9]	80 ± 10%[10]
		[6] LW3A, LW3B	250 ± 20%	250 ± 10%[11]
		[7, 12] LY3A, LY3B	150 ± 20%[9]	150 ± 10%[10]
	Luminous flux (in lm at 9 V DC)	[5] LR3A, LR3B	19 min	
		[6] LW3A, LW3B	50 min.	
		[7, 12] LY3A, LY3B	30 min	

1/ The reference plane is the plane defined by the contact points of the cap-holder fit.
2/ The reference axis is perpendicular to the reference plane and passing through the centre of the bayonet core.
3/ Light emitting area: to be checked by means of the box system in Figure 2.
4/ A minimum free air space of 5mm around the light source shall be respected for convection.
5/ The emitted light shall be red.
6/ The emitted light shall be white.
7/ The emitted light shall be amber.
8/ After continuous operation for 30 minutes at 23 ± 2.5° C.
9/ The measured value shall be in between 100 per cent and 70 per cent of the value measured after 1 minute.
10/ The measured value shall be in between 85 per cent and 75 per cent of the value measured after 1 minute.
11/ The measured value shall be in between 100 per cent and 90 per cent of the value measured after 1 minute.
12/ Operated in flashing mode for 30 minutes (frequency = 1.5 Hz, duty cycle 50 per cent ON, 50 per cent OFF). Measured in the ON-state of flashing mode after 30 minutes of operation.
13/ Light centre length

Electrical characteristics

In case of LED light source failure (no light emitted) the max. electrical current draw, when operated between 12 V and 14 V, shall be less than 20 mA (open circuit condition).

Screen projection requirements

The following test is intended to define the requirements for the light emitting area of the LED light source and to determine whether the light emitting area is correctly positioned relative to the reference axis and reference plane in order to check compliance with the requirements.

The position of the light emitting area is checked by the box system defined in Figure 2, which is aligned to the planes C90 and C180 and shows the projection when viewing along direction γ=0º (C, γ as defined in Figure 3).

The proportion of the total luminous flux emitted into the viewing direction shall be as described in table 3.

Figure 2
Box definition of the light emitting area with dimensions as specified in table 2

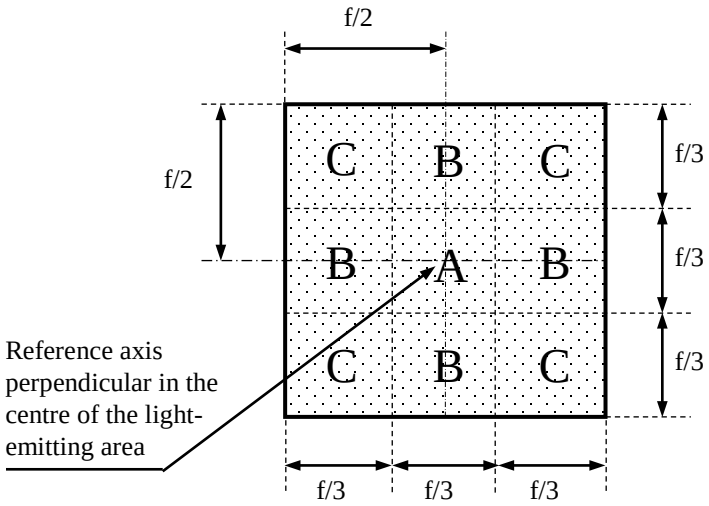

Table 2
Dimensions of the box system in Figure 2

Dimensions in mm	*f*	
	LR3A, LR3B	*LW3A, LW3B LY3A, LY3B*
LED light sources of normal production	3.0	4.5
Standard LED light sources	3.0	4.5

Table 3
Proportion of the total luminous flux emitted into the viewing direction from the areas specified in figure 2

Category	*Area(s)*	*LED light sources of normal production*	*Standard LED light sources*
LR3A LR3B	A	≤ 25%	≤ 10%
	Each B individually	≥ 15%	≥ 20%
	Each C individually	-	≤ 10%
	A, all B and all C together	≥ 90%	≥ 90%
LW3A LW3B LY3A LY3B	Each A,B individually	≥ 6%	≥ 8%
	Each A, B individually	< 40%	< 30%
	All A, B together	≥ 55%	≥ 60%
	Each C individually	< 15%	< 10%
	All A, B and C together	≥ 90%	≥ 90%

Normalized luminous intensity distribution

The following test is intended to determine the normalized luminous intensity distribution of the light source in an arbitrary plane containing the reference axis. The intersection of the reference axis and the parallel plane to the reference plane in distance e is used as the coordinate system origin.

The light source is mounted on a flat plate with the corresponding mounting lug features. The plate is mounted to the goniometer table by a bracket, so that the reference axis of the light source lines up with one of the rotating axis of the goniometer. The corresponding measurement set-up is described in Figure 3.

Luminous intensity data is recorded with a standard photo-goniometer. The measurement distance should be chosen appropriately, to make sure that the detector is located in the far field of the light distribution.

The measurements shall be performed in C-planes C_0 (C_{180}) and C_{90} (C_{270}), which contain the reference axis of the light source. The test points for each plane for multiple polar angles γ are specified in Tables 4a and 4b.

The measured luminous intensity values, normalised to the measured luminous flux of the individual light source under test, shall be converted to normalised luminous intensity values of a 1,000 lm light source. The data shall comply with the tolerance band as defined in Tables 4a and 4b.

The drawings are intended only to illustrate the essential set-up for measurement of the LED light source.

Figure 3
Set-up to measure the luminous intensity distribution

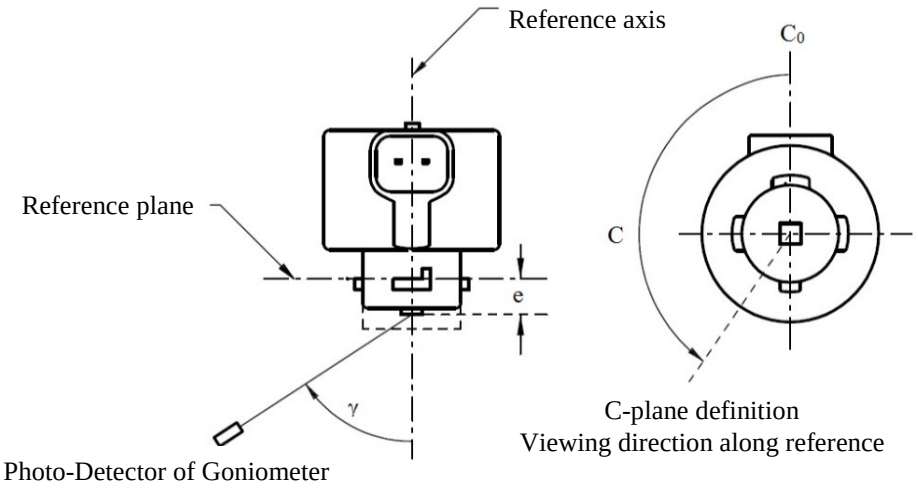

LR3A, LW3A, LY3A

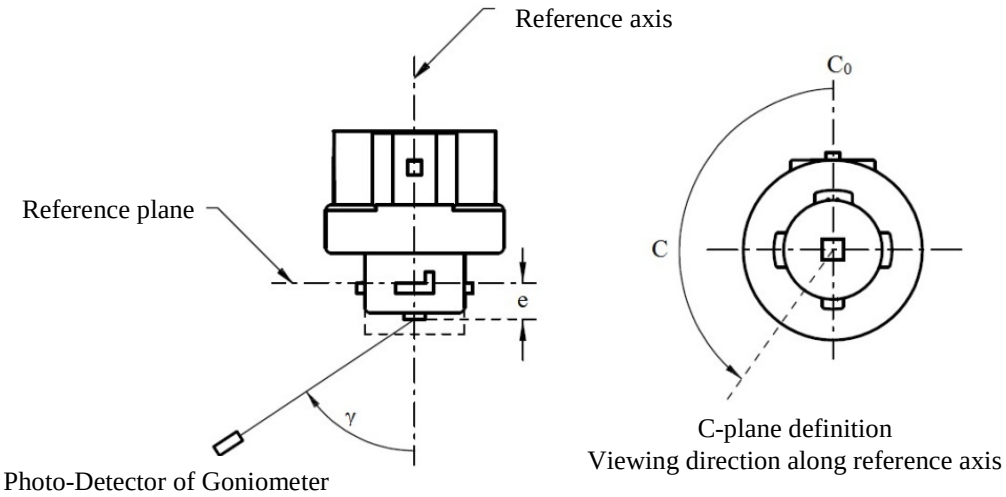

LR3B, LW3B, LY3B

The light pattern as described in Tables 4a and 4b shall be substantially uniform, i.e. in between two adjacent grid points the relative luminous intensity requirement is calculated by linear interpolation using the two adjacent grid points. In case of doubt this may be checked in addition to verification of the grid points given in Tables 4a and 4b.

Table 4a
Test point values of normalized intensities for categories LR3A and LR3B

	LED light sources of normal production		*Standard LED light sources*	
Angle γ	*Minimum Intensity in cd /1000 lm*	*Maximum Intensity in cd/1000 lm*	*Minimum Intensity in cd /1000 lm*	*Maximum Intensity in cd /1000 lm*
-90°	0	38	0	25
-75°	0	160	0	140
-60°	98	246	127	220
-45°	142	305	181	275
-30°	169	352	213	315
-15°	192	389	239	340
0°	200	401	248	352
15°	192	389	239	340
30°	169	352	213	315
45°	142	305	181	275
60°	98	246	127	220
75°	0	160	0	140
90°	0	38	0	25

Table 4b
Test point values of normalized intensities for categories LW3A, LW3B, LY3A and LY3B

	LED light sources of normal production		*Standard LED light sources*	
Angle γ	*Minimum Intensity in cd /1000 lm*	*Maximum Intensity in cd/1000 lm*	*Minimum Intensity in cd /1000 lm*	*Maximum Intensity in cd /1000 lm*
-90°	0	70	0	65
-75°	0	160	0	150
-60°	85	245	105	220
-45°	145	310	180	275
-30°	170	380	220	335
-15°	190	415	240	370
0°	200	425	250	390
15°	190	415	240	370
30°	170	380	220	335
45°	145	310	180	275
60°	85	245	105	220
75°	0	160	0	150
90°	0	70	0	65

The drawings are intended only to illustrate the essential dimensions of the LED light source.

Figure 1*
Main Drawing

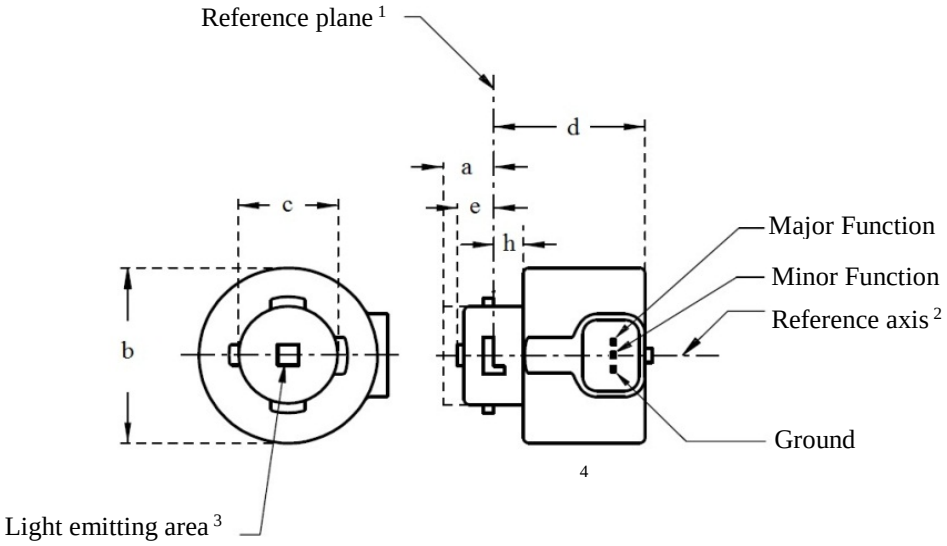

LR4A

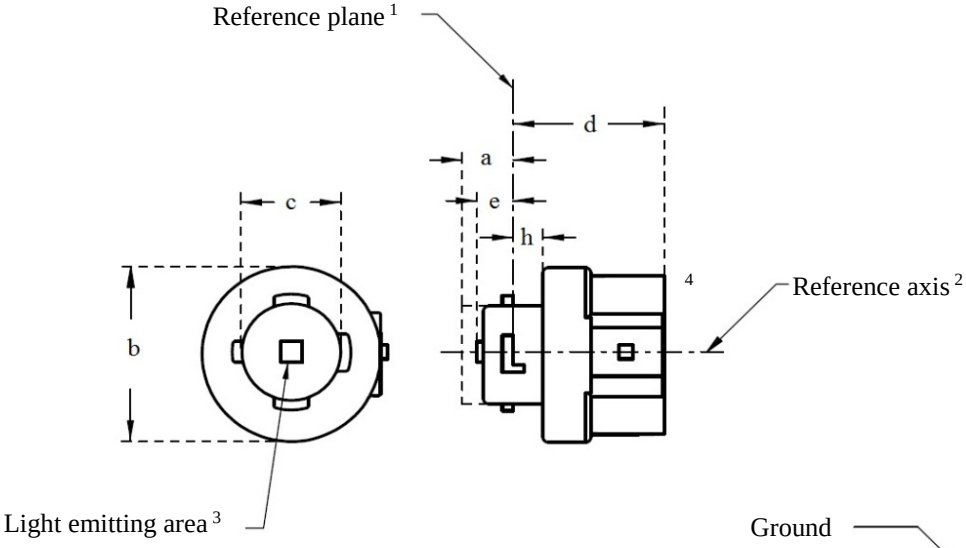

LR4B

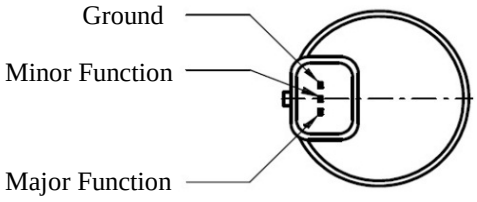

For the notes see sheet LR4/2.

* Projection method: 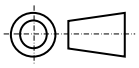

Table 1
Essential dimensional, electrical and photometric characteristics of the LED light source

Dimensions		*Production LED light sources*		*Standard LED light sources*	
a	mm	6.0 max.			
b	mm	c + 10.0 min. 38.0 max.			
c	mm	18.5 ± 0.1			
d	mm	28.0 max.			
e [9/]	mm	3.0 ± 0.30		3.0 ± 0.15	
h	mm	5.5 + 0.0/ – 0.1			
Cap PGJ18.5t-5 in accordance with IEC Publication 60061 (sheet 7004-185-1)					
Electrical and photometric characteristics [5]					
Rated values		*Minor function*	*Major function*	*Minor function*	*Major function*
	Volts	12		12	
	Watts	0.75	3	0.75	3
Objective Values [6]	Watts (at 13.5 V DC)	1.0 max.	3.5 max.	1.0 max.	3.5 max.
	Luminous flux (in lm at 13.5 V DC)	6 ± 20%	80 ± 20% [7]	6 ± 10%	80 ± 10% [8]
	Luminous flux (in lm at 9 V DC)	1.5 min.	19 min.		

1/ The reference plane is the plane defined by the contact points of the cap-holder fit.
2/ The reference axis is perpendicular to the reference plane and passing through the centre of the Bayonet core.
3/ Light emitting area: to be checked by means of the box system in Figure 2
4/ A minimum free air space of 5mm around the LED light source shall be respected for convection.
5/ The emitted light shall be red.
6/ After continuous operation for 30 minutes at 23 ± 2.5° C.
7/ The measured value shall be in between 100 per cent and 70 per cent of the value measured after 1 minute.
8/ The measured value shall be in between 85 per cent and 75 per cent of the value measured after 1 minute.
9/ Light centre length

Electrical characteristics

In case of LED light source failure (no light emitted) the max. electrical current draw, when operated between 12 V and 14 V, shall be less than 20 mA (open circuit condition).
The major and the minor function shall be operated by separate electrical circuits.

Screen projection requirements

The following test is intended to define the requirements for the light emitting area of the LED light source and to determine whether the light emitting area is correctly positioned relative to the reference axis and reference plane in order to check compliance with the requirements.

The position of the light emitting area is checked by the box system defined in Figure 2, which is aligned to the planes C90 and C180 and shows the projection when viewing along direction γ=0º (C, γ as defined in Figure 3).

The proportion of the total luminous flux emitted into the viewing direction shall be as described in table 3.

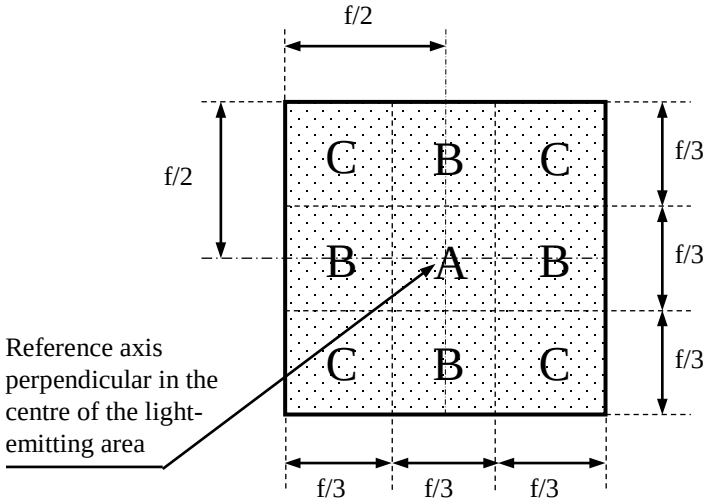

Figure 2

Box definition of the light emitting area with dimensions as specified in table 2

Table 2

Dimensions of the box system in Figure 2

Dimensions in mm	f
LED light sources of normal production	4.5
Standard LED light sources	4.5

Table 3

Proportion of the total luminous flux emitted into the viewing direction from the areas specified in figure 2

Function	*Area(s)*	*LED light sources of normal production*	*Standard LED light sources*
Minor	A	≥ 75%	≥ 80%
Major	A	≤ 25%	≤ 10%
	Each B individually	≥ 15%	≥ 20%
	Each C individually	-	≤ 10%
	A, all B and all C together	≥ 90%	≥ 90%

Normalized luminous intensity distribution

The following test is intended to determine the normalized luminous intensity distribution of the light source in an arbitrary plane containing the reference axis. The intersection of the reference axis and the parallel plane to the reference plane in distance e is used as the coordinate system origin.

The light source is mounted on a flat plate with the corresponding mounting lug features. The plate is mounted to the goniometer table by a bracket, so that the reference axis of the light source lines up with one of the rotating axis of the goniometer. The corresponding measurement set-up is described in Figure 3.

Luminous intensity data is recorded with a standard photo-goniometer. The measurement distance should be chosen appropriately, to make sure that the detector is located in the far field of the light distribution.

The measurements shall be performed in C-planes C_0 (C_{180}) and C_{90} (C_{270}), which contain the reference axis of the light source. The test points for each plane for multiple polar angles γ are specified in Table 4.

After measurement the data shall be normalized to 1,000 lm according to paragraph 3.1.11 using the luminous flux of the individual light source under test. The data shall comply with the tolerance band as defined in Table 4.

The drawings are intended only to illustrate the essential set-up for measurement of the LED light source.

Figure 3*

Set-up to measure the luminous intensity distribution

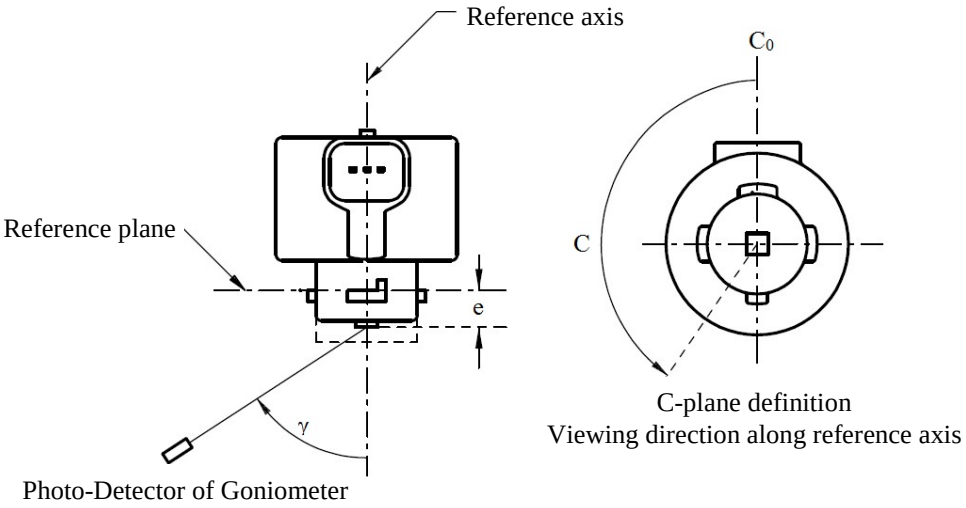

LR4A

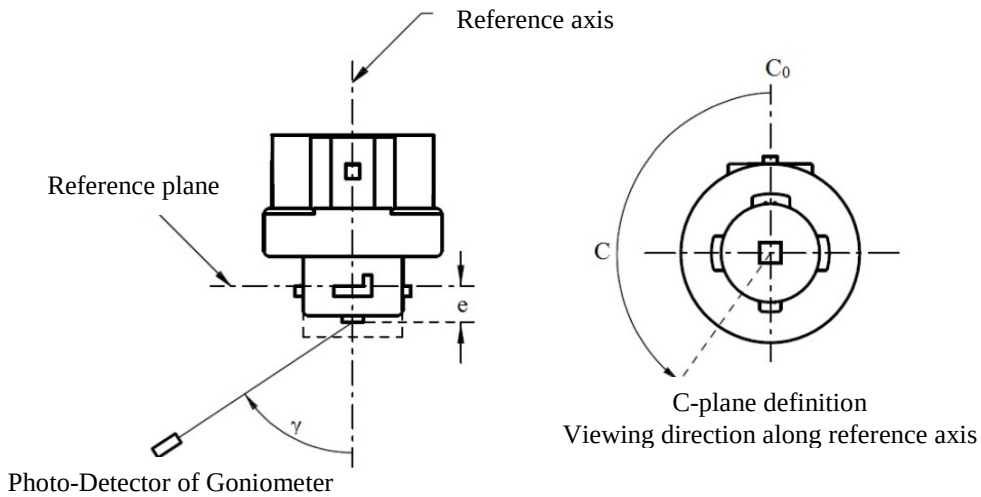

LR4B

The light pattern as described in Table 4 shall be substantially uniform, i.e. in between two adjacent grid points the relative luminous intensity requirement is calculated by linear interpolation using the two adjacent grid points. In case of doubt this may be checked in addition to verification of the grid points given in Table 4.

Table 4
Test point values of normalized intensities of normal production and standard LED light sources, respectively. Requirements apply to both, major and minor function.

	LED light sources of normal production		*Standard LED light sources*	
Angle γ	*Minimum Intensity in cd /1000lm*	*Maximum Intensity in cd/1000lm*	*Minimum Intensity in cd /1000lm*	*Maximum Intensity in cd/1000lm*
-90°	0	38	0	25
-75°	0	160	0	140
-60°	98	246	127	220
-45°	142	305	181	275
-30°	169	352	213	315
-15°	192	389	239	340
0°	200	401	248	352
15°	192	389	239	340
30°	169	352	213	315
45°	142	305	181	275
60°	98	246	127	220
75°	0	160	0	140
90°	0	38	0	25

Categories LR5A, LR5B, LW5A, LW5B, LY5A, LY5B **Sheet L5/1**

The drawings are intended only to illustrate the essential dimensions of the LED light source.

Figure 1*
Main Drawing

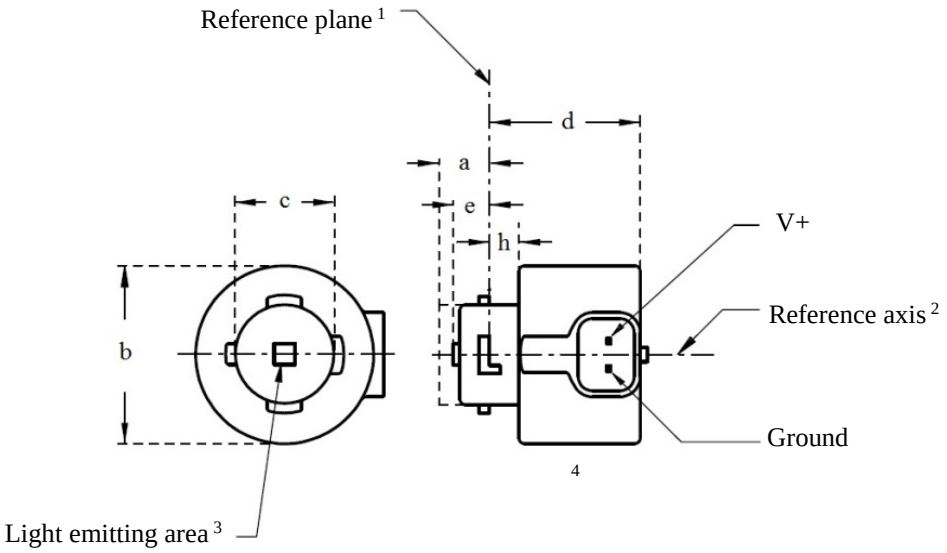

LR5A, LW5A, LY5A

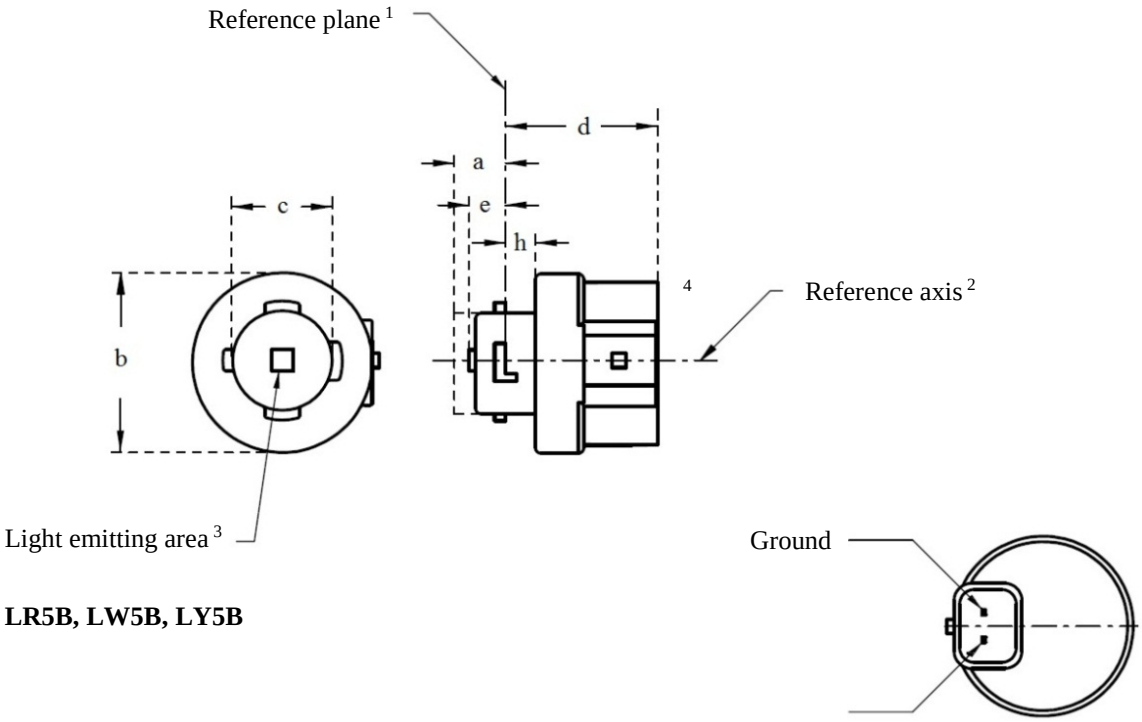

LR5B, LW5B, LY5B

For the notes see sheet L5/2

* Projection method: 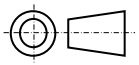

Table 1
Essential dimensional, electrical and photometric characteristics of the LED light source

Dimensions			*Production LED light sources*	*Standard LED light sources*
a		mm	6.0 max.	
b		mm	c + 10.0 min. 38.0 max.	
c		mm	18.5 ± 0.1	
d		mm	28.0 max.	
e [11/]		mm	3.0 ± 0.30	3.0 ± 0.15
h		mm	5.5 + 0.0/ – 0.1	
Cap	LR5A, LR5B PGJ18.5d-10 LW5A, LW5B PGJ18.5d-28 LY5A, LY5B PGJ18.5d-19	in accordance with IEC Publication 60061 (sheet 7004-185-1)		
Electrical and photometric characteristics				
Rated values	Volts		12	
	Watts	LR5A, LR5B	3	
		LW5A, LW5B LY5A, LY5B	6	
Objective Values[8]	Watts (at 13.5 V DC)	LR5A, LR5B	3.5 max.	
		LW5A, LW5B	8 max.	
		[10] LY5A, LY5B		
	Luminous flux (in lm at 13.5 V DC)	[5] LR5A, LR5B	120 ± 15%	120 ± 5% [9]
		[6] LW5A, LW5B	350 ± 20%	350 ± 10% [9]
		[7, 10] LY5A, LY5B	280 ± 20%	280 ± 10% [9]
	Luminous flux (in lm at 9 V DC)	[5] LR5A, LR5B	28 min.	
		[6] LW5A, LW5B	65 min.	
		[7, 10] LY5A, LY5B	55 min.	

1/ The reference plane is the plane defined by the contact points of the cap-holder fit.
2/ The reference axis is perpendicular to the reference plane and passing through the centre of the bayonet core.
3/ Light emitting area: to be checked by means of the box system in Figure 2
4/ A minimum free air space of 5mm around the light source shall be respected for convection.
5/ The emitted light shall be red.
6/ The emitted light shall be white.
7/ The emitted light shall be amber.
8/ After continuous operation for 30 minutes at 23 ± 2.5° C.
9/ The measured value shall be in between 100 per cent and 90 per cent of the value measured after 1 minute.
10/ Operated in flashing mode for 30 minutes (frequency = 1.5 Hz, duty cycle 50 per cent ON, 50 per cent OFF). Measured in the ON-state of flashing mode after 30 minutes of operation.
11/ Light centre length

Electrical characteristics

In case of LED light source failure (no light emitted) the max. electrical current draw, when operated between 12 V and 14 V, shall be less than 20 mA (open circuit condition).

Screen projection requirements

The following test is intended to define the requirements for the light emitting area of the LED light source and to determine whether the light emitting area is correctly positioned relative to the reference axis and reference plane in order to check compliance with the requirements.

The position of the light emitting area is checked by the box system defined in Figure 2, which is aligned to the planes C90 and C180 and shows the projection when viewing along direction γ=0º (C, γ as defined in Figure 3).

The proportion of the total luminous flux emitted into the viewing direction shall be as described in table 3.

Figure 2
Box definition of the light emitting area with dimensions as specified in table 2

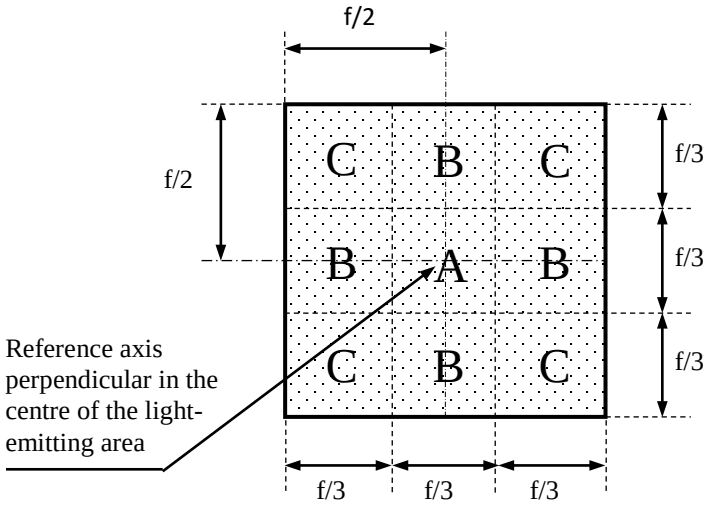

Table 2
Dimensions of the box system in Figure 2

Dimensions in mm	*f*
LED light sources of normal production	4.5
Standard LED light sources	4.5

Table 3

Proportion of the total luminous flux emitted into the viewing direction from the areas specified in figure 2

Category	*Area(s)*	*LED light sources of normal production*	*Standard LED light sources*
LR5A LR5B	Each B individually	≥ 10%	≥ 15%
	Each A, B individually	< 40%	< 30%
	All B together	≥ 60%	≥ 65%
	Each C individually	-	< 10%
	All A, B and C together	≥ 90%	≥ 90%
LW5A LW5B LY5A LY5B	Each A,B individually	≥ 6%	≥ 8%
	Each A, B individually	< 40%	< 30%
	All A, B together	≥ 55%	≥ 60%
	Each C individually	< 15%	< 10%
	All A, B and C together	≥ 90%	≥ 90%

Normalized luminous intensity distribution

The following test is intended to determine the normalized luminous intensity distribution of the light source in an arbitrary plane containing the reference axis. The intersection of the reference axis and the parallel plane to the reference plane in distance e is used as the coordinate system origin.

The light source is mounted on a flat plate with the corresponding mounting lug features. The plate is mounted to the goniometer table by a bracket, so that the reference axis of the light source lines up with one of the rotating axis of the goniometer. The corresponding measurement set-up is described in Figure 3.

Luminous intensity data is recorded with a standard photo-goniometer. The measurement distance should be chosen appropriately, to make sure that the detector is located in the far field of the light distribution.

The measurements shall be performed in C-planes C_0 (C_{180}) and C_{90} (C_{270}), which contain the reference axis of the light source. The test points for each plane for multiple polar angles γ are specified in Table 4.

The measured luminous intensity values, normalised to the measured luminous flux of the individual light source under test, shall be converted to normalised luminous intensity values of a 1,000 lm light source. The data shall comply with the tolerance band as defined in Table 4.

The drawings are intended only to illustrate the essential set-up for measurement of the LED light source.

Figure 3
Set-up to measure the luminous intensity distribution

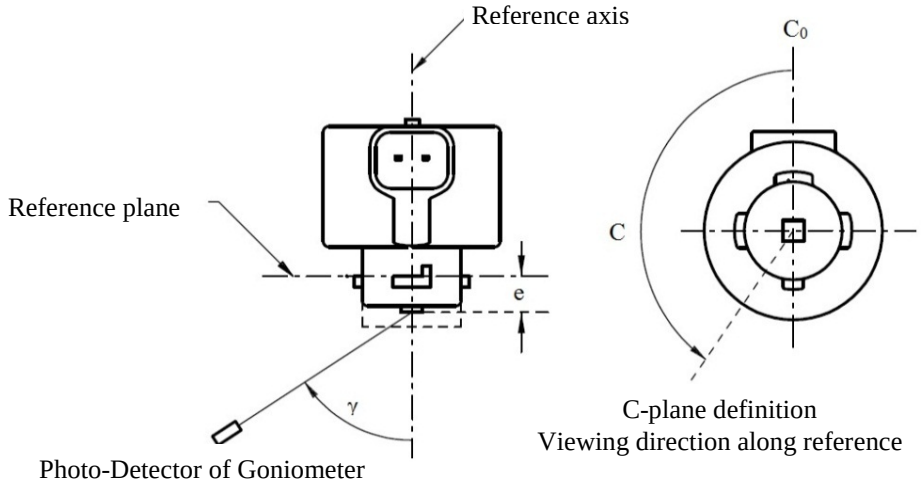

LR5A, LW5A, LY5A

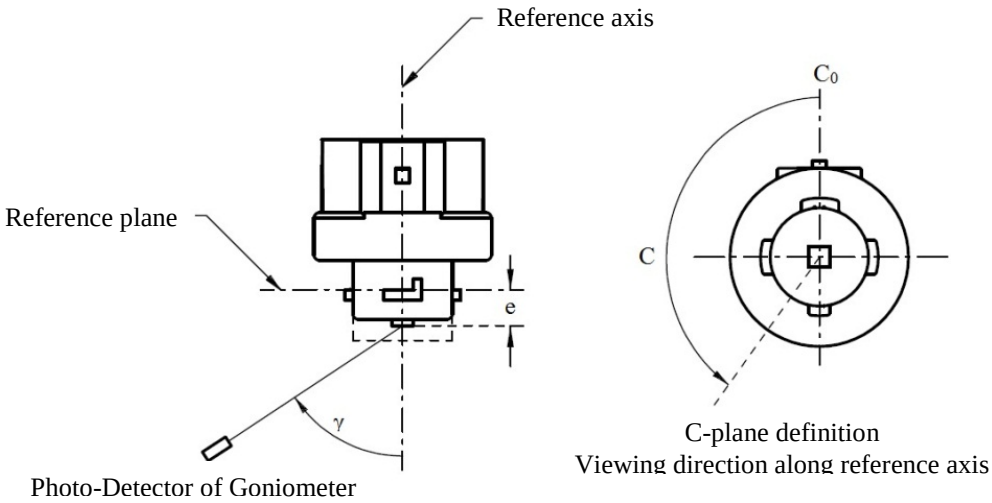

LR5B, LW5B, LY5B

The light pattern as described in Table 4 shall be substantially uniform, i.e. in between two adjacent grid points the relative luminous intensity requirement is calculated by linear interpolation using the two adjacent grid points. In case of doubt this may be checked in addition to verification of the grid points given in Table 4.

Table 4
Test point values of normalized intensities for categories LR5A, LR5B, LW5A, LW5B, LY5A and LY5B

	LED light sources of normal production		*Standard LED light sources*	
Angle γ	*Minimum Intensity in cd /1000 lm*	*Maximum Intensity in cd/1000 lm*	*Minimum Intensity in cd /1000 lm*	*Maximum Intensity in cd /1000 lm*
-90°	0	70	0	65
-75°	0	160	0	150
-60°	85	245	105	220
-45°	145	310	180	275
-30°	170	380	220	335
-15°	190	415	240	370
0°	200	425	250	390
15°	190	415	240	370
30°	170	380	220	335
45°	145	310	180	275
60°	85	245	105	220
75°	0	160	0	150
90°	0	70	0	65