AŽD Praha s.r.o.

Signaling & Interlocking Technology Development for HSL in Czech Republic

Ing. Petr Liška
Export Manager

April 2013

Present and Future of HSL

Present technology

Optimal Intercity transport

- 160 km/h top speed
- 50 – 80 km between stops
- High capacity, lower on-board service
- Attractive overall journey time through
  - High frequency / regular stopping patterns
  - High acceleration and braking / low station dwell time
  - Efficient guaranteed connections between IC services at hubs and with other transport modes at all stations
- Design for reliability, low weight / energy use
  - Traction power issues
- Personal security through open train design, alarms etc.

Essential preparation for HSL

- Reconstruction of existing rail Corridors if practical
- Building of new, direct high speed lines for HSL trains meeting interoperability requirements
- Segregated infrastructure for main journey section
  - Need for very high quality infrastructure
- Minimizing of transit time through major interchanges
- Ability to use the existing track and control systems for city center access and to serve satellite cities

Future solution for CR

- Upgraded conventional lines could become slower subcategory for European HSL lines
  - Capacity impact on conventional train operation
- Suitable segments of corridor lines will be improved for speed up to 250 km/h
- Developing better alternatives:
  - Selecting new straight line track arrangement
  - Implementing segregated infrastructure
  - Employing latest signalling technologies

Path toward the future

- Desire
- Technology
- Economics

Available AZD Signaling systems for HSL

- Line Signaling systems:
  - Classical – Automatic block (no speed limitations)
  - Interoperable - ETCS (European Train Control Systems (no speed limitations)
- Station Interlocking Systems (no speed limitations)
  - only for slow segments near cities max 160 km/h)
- Remote signaling systems supervision (no speed limitations)
- Speed monitoring systems (el. Track circuits, Axle counters etc.) - (no speed limitations)
- Safe and reliable Point machines:
  - Vibration/impact safety (tested up to speeds 250 km/h, Positive expert assessment VUZ for 300 km/h)

Automatic Block ABE-1

- ABE-1 is suitable for conventional implementation without speed limitations
- Main Parameters:
  - Fully electronic and centralized system meeting SIL 4
  - Line consent function, interaction with station interlocking systems
  - Signals can be located at a distance up to 7.6 km
  - For distances over 15 km two additional controllers can be inserted
  - System transfers track side signaling information ATP code onto the train driver console
  - Transmission of up to 5 internal signal aspects and cooperation with ERTMA/ETCS

ETCS systems for HSL implementation

- ETCS will be implemented on main corridors and on HSL
  - Part of ERTMS (Rail Traffic Management System for European cross-border interoperable standard of train control, signaling and traffic management
  - Major reduction of workload for train drivers
- Purpose:
  - Lowering expenditures for maintenance and line operation
  - Optimization of train movements by the interpretation of timetables and train running data.
  - Real-time train management and route planning
  - Shall replace the national train control systems in the future to ensure cross-border interoperability

AZD proven ETCS experience

- ETCS Level 1
  - Available for implementation
  - In-house development LEU
  - International implementation needed
- ETCS Level 2
  - Available for implementation
  - Commercial on-going project Breclav - Kolin
- ETCS Level 3
  - Available for implementation
  - On-going Engineering studies and development

Level crossing installations

- Not required for segregated HSL track
- Available for upgraded conventional lines
  - Type PZZ-J has no speed limit limitations
  - Implementation for segments with line speeds below 160 km/h
  - Optimized for vicinity of main stations etc.

Failsafe electronic Track Circuits

- KOA-1
  - Failsafe SIL4 (CENELEC) Double track circuits
  - Transmission of continuous ATC code for engines not equipped with on-board ETCS
  - Integral diagnostics
  - Integration into AZD system wide diagnostics
  - Suitable for electrified lines or independent traction
  - No speed limitation

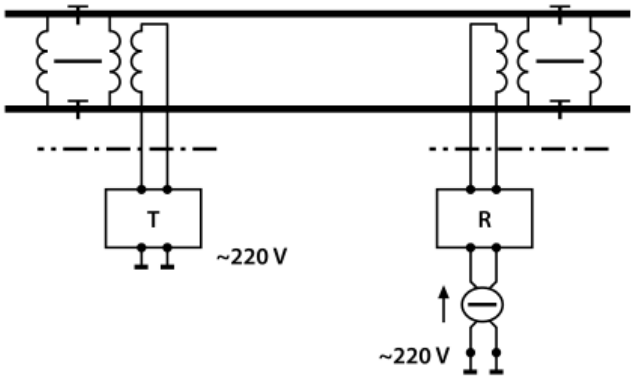

High speed point machine family

- Point machine EP 600 & Jaw point lock VZ 200
  - Electro-motoric operation
  - Certified for speed of 250 km/h
  - Expert assessment for 300 km/h.

- For HSL applications
  - ✓ Movable point frog for high-speed applications above 200 km/h
  - ✓ Operation of high speed points using coordinated multiple Point machines.
  - ✓ For HSL implementation utilization of continuous monitoring, including data collection and maintenance assessment
  - ✓ Monitoring of throw force, vibration and completion time.

Technologies for the future of travel

Managing the future travel

PRAHA

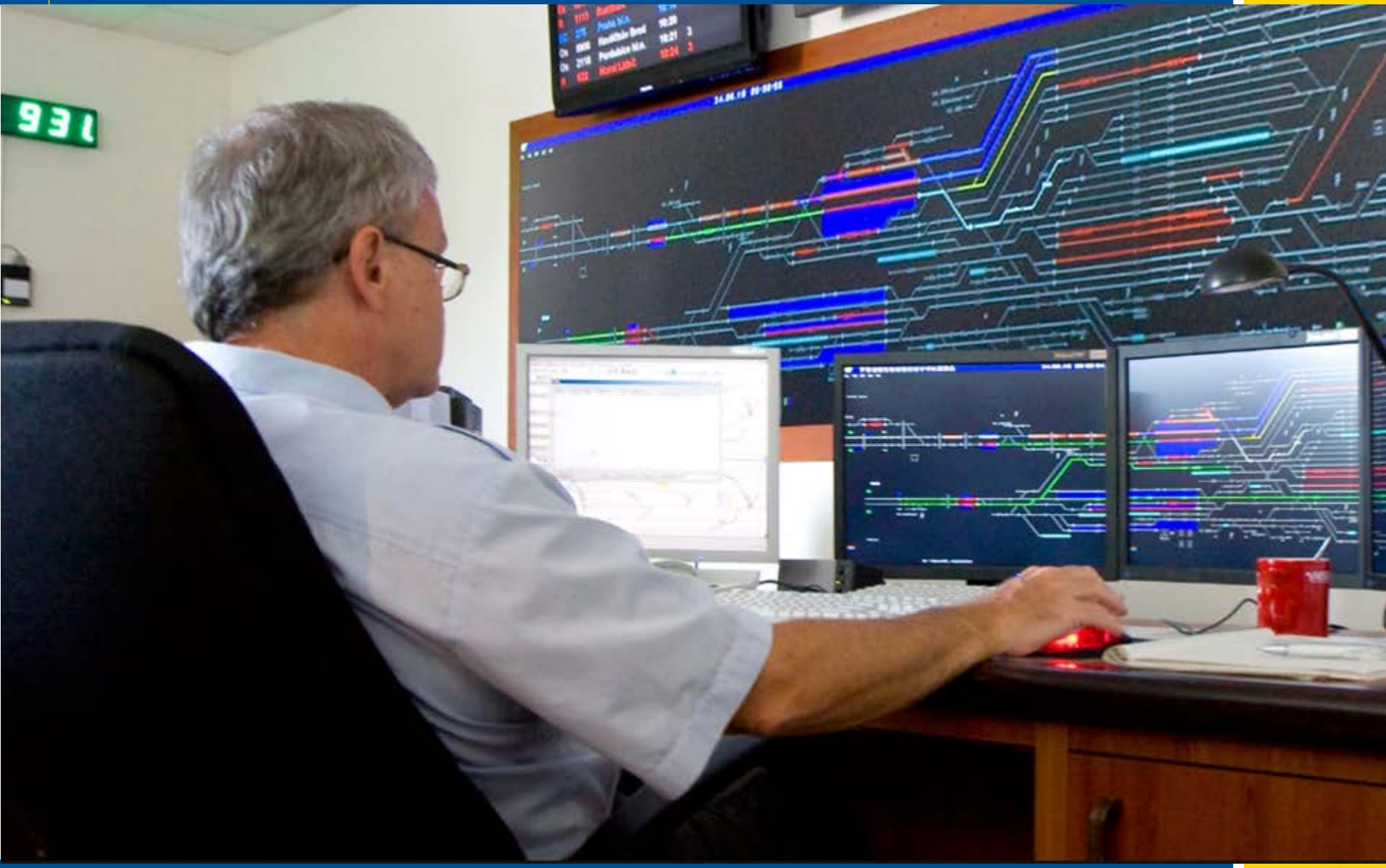

Summary

AŽD Praha is actively developing progressive technologies and systems for safe HSL implementation in partnership with VUZ and Czech Railway industry

AZD products and technologies are available for speeds up to 300 km/h
Point machines are proven up to 250 km/h
With excellent outlook for 300 km/h

THANK YOU FOR YOUR ATTENTION

AŽD Praha s.r.o.
Žirovnická 2/3146, CZ-106 17, Praha 10
Czech Republic