United Nations ECE/TRANS/WP.29/GRSP/61

Economic and Social Council

Distr.: General
14 June 2017

Original: English

Economic Commission for Europe

Inland Transport Committee

World Forum for Harmonization of Vehicle Regulations

Working Party on Passive Safety

Sixty-first session
Geneva, 8-12 May 2017

Report of the Working Party on Passive Safety on its sixty-first session

Contents

GE.17-09667(E)
1709667

Annexes

I. Attendance

1. The Working Party on Passive Safety (GRSP) held its sixty-first session in Geneva from 8 to 12 May 2017, chaired by Mr. N. Nguyen (United States of America). Experts from the following countries participated in the work following Rule 1(a) of the Rules of Procedure of the World Forum for Harmonization of Vehicle Regulations (WP.29) (TRANS/WP.29/690, Amend.1 and Amend.2): Australia; Canada; China; France; Germany; India; Italy; Japan; Netherlands; Norway; Poland; Republic of Korea; Russian Federation; Spain; Sweden; Switzerland; United Kingdom of Great Britain and Northern Ireland (United Kingdom) and United States of America. An expert from the European Commission (EC) participated. Experts from the following non-governmental organizations participated: Consumers International (CI); European Association of Automotive Suppliers (CLEPA); International Motorcycle Manufacturers Association (IMMA) and International Organization of Motor Vehicle Manufacturers (OICA). At the invitation of the secretariat, an expert from the Confederation of the European Bicycle Industry (CONEBI) also attended.

2. The informal documents distributed during the session are listed in Annex I of this report.

II. Adoption of the agenda (agenda item 1)

Documentation: ECE/TRANS/WP.29/GRSP/2017/1 and Add.1
Informal document GRSP-61-05

3. GRSP considered and adopted the agenda (ECE/TRANS/WP.29/GRSP/2017/1 and Add.1) proposed for the sixty-first session with the new agenda items 26 (h), 26 (i), 26 (j) and 27 as well as the running order (GRSP-61-05). The list of GRSP informal working groups are listed in Annex VIII of this report.

III. Global technical regulation No. 7 (Head restraints) (agenda item 2)

Documentation: ECE/TRANS/WP.29/GRSP/2015/34

4. The expert from the United Kingdom, on behalf of the Chair of the Informal Working Group (IWG) on the UN Global Technical Regulation (UN GTR) No. 7 - Phase 2, clarified that the IWG had suspended its activity because of a lack of results on biomechanical criteria. He added that the Chair's intention was to resume the activity of the IWG and that he would contact the group's members. He concluded that the Chair of the IWG would inform GRSP at its December 2017 session on the follow-up of activities of the IWG. The Chair of GRSP, on behalf of the expert of the United States of America, informed GRSP that the National Highway Traffic Administration (NHTSA) could possibly re-start correlation testing between dummy and the Post Mortem Human Subjects (PHMS). He volunteered to update GRSP about the plan of NHTSA on this subject at the December 2017 session.

IV. Global technical regulation No. 9 (Pedestrian safety) (agenda item 3)

A. Proposal for Amendment 2 (Phase 2) of the global technical regulation

Documentation: ECE/TRANS/WP.29/GRSP/2014/15
ECE/TRANS/WP.29/GRSP/2014/16
ECE/TRANS/WP.29/GRSP/2015/2
ECE/TRANS/WP.29/GRSP/2017/3

5. The expert from Germany informed GRSP that the IWG had planned to meet for the last time to move Phase 2 forward and incorporate the flexible pedestrian legform impactor (FlexPLI). GRSP agreed to resume discussion at its December 2017 session on a consolidated document provided by the IWG incorporating: (i) the draft amendment to the UN GTR on FlexPLI (ECE/TRANS/WP.29/GRSP/2014/15), (ii) the new improved bumper test proposed by the Task Force on Bumper Test Area (TF-BTA) (ECE/TRANS/WP.29/GRSP/2015/2) and (iii) the Injury Assessment Reference Values (IARVs)(ECE/TRANS/WP.29/GRSP/2017/3). Moreover, the IWG would provide, at that time, a final report of the activities of the group based on ECE/TRANS/WP.29/GRSP/2014/16. The Chair of GRSP offered to host the meeting of the IWG at its earliest convenience in Washington, D.C.

B. Proposal for Amendment 3 of the global technical regulation

Documentation: ECE/TRANS/WP.29/GRSP/2012/2
ECE/TRANS/WP.29/GRSP/2014/5

6. The Chair of GRSP, on behalf the United States of America reiterated the experts that NHTSA's request for a delay of the proposal at this time as NHTSA is going thru its adoption process of phase 1 (ECE/TRANS/WP.29/GRSP/2014/5). He concluded that he would inform GRSP at its December 2017 session about the plan of an NPRM on this subject.

C. Proposal for Amendment 4 of the global technical regulation

Documentation: Informal document GRSP-61-12

7. The expert from the Republic of Korea introduced the Status Report (GRSP-61-12) of the Task Force of Deployable Pedestrian Protection Systems (TF-DPPS). He explained that the basis of discussion within the TF were New Car Assessment Programme (NCAP) test protocols and that the TF had requested guidance from GRSP on its mandate about three issues: (i) development of a test procedure amending the current text of the UN Regulation No. 129 and UN GTR No. 9, (ii) possible inclusion of numerical simulation and (iii) upgrade the TF to an IWG. The expert from Japan underlined that the mandate of the TF was limited to clarify test procedures and not to define new requirements (e.g. the trigger time of bonnet deployment). He advised that the establishment of an IWG would be needed if the intention were to develop new requirements. The expert from OICA endorsed the statement from Japan and argued that NCAP was applying test procedures established within the regulatory framework of WP.29 and that the two domains should not be mixed by the TF. Moreover, he recommended the TF to carefully think about using a numerical simulation as a requirement in a UN regulation as this would be the first time such development is being used in a UN Regulation or UN GTR. GRSP requested the TF to take into account the above-mentioned statements into consideration while develop its

recommendations. Finally, all the experts from Contracting Parties were encouraged to participate in the TF activities.

V. Global technical regulation No. 13 (Hydrogen and Fuel Cells Vehicles) (agenda item 4)

Documentation: ECE/TRANS/WP.29/2017/56

8. The expert from Japan informed GRSP that the request for authorization (ECE/TRANS/WP.29/2017/56) had been endorsed by AC.3 at its March 2017 session and that AC.3 had invited all experts to contact the co-sponsors to participate in the activities of the IWG that would likely to start late 2017 with a completion expected by the end of 2020. The expert from EC underlined the importance of Phase 2 of the UN GTR to solve the lack of harmonization of material qualification of containers. He added that this legislative void would create bottlenecks to technical progress. The Chair of GRSP encouraged all Contracting Parties and technical experts to participate in the IWG and to share research data and testing on material compatibility as well as other technical items in phase 2 that would enable development of robust provisions.

VI. Harmonization of side impact dummies (agenda item 5)

9. The Chair of GRSP, on behalf of the Chair of the IWG Mr. D. Sutula, informed GRSP about the work progress of the IWG. He stated that the Chair would re-open the activities of the group to finalize the work on the 50th percentile World Side Impact dummy (SID). Moreover, he informed GRSP about the delay of work on the 5th percentile female dummy due to the lack of availability of replacements parts.

VII. Global technical regulation on electric vehicles (agenda item 6)

Documentation: ECE/TRANS/WP.29/GRSP/2017/2
Informal documents GRSP-61-07, GRSP-61-08, GRSP-61-09 and GRSP-61-25

10. The Chair of GRSP, chairing also the IWG, informed GRSP about the completion of work achieved by the group and showed the main contents of the draft UN GTR (ECE/TRANS/WP.29/GRSP/2017/2) through a presentation (GRSP-61-25). He also introduced the final report of the IWG activities (GRSP-61-09). The expert from EC supplemented this presentation by introducing the main changes to the draft UN GTR (GRSP-61-08) that had been agreed upon by the IWG during its last meetings. He also introduced a clean copy of the draft UN GTR (GRSP-61-07) incorporating GRSP-61-08. Finally, GRSP recommended ECE/TRANS/WP.29/GRSP/2017/2, as amended by Annex II to this report, and the final report of the IWG (GRSP-61-09) as reproduced in Annex II to this report, for their establishment in the global registry. The secretariat was requested to submit the proposal and the final report to WP.29 and to the Executive Committee of the 1998 Agreement (AC.3) for consideration and vote at their November 2017 sessions as a new UN GTR on Electric Vehicle Safety.

11. The expert from EC expected that UN Regulation No. 100 would be amended as a new series of amendments to facilitate the transposition of the UN GTR into national legislation the Chair of GRSP clarified that the United States of America intends to follow the UN GTR adoption process as required under the 1998 Agreement on the issue of the transposition plan of the UN GTR into domestic legislations, He also expressed that

currently there is a lack of safety provisions on Lithium Ion battery in his country. The expert from the China informed GRSP that his country plans to transpose the UN GTR gradually due to its complexity. The Chair of GRSP recommended that the transposition of the UN GTR should be as much as possible consistent with the actual text of the UN GTR. The Chair of GRSP informed GRSP that the IWG of phase 2 of the UN GTR would start, without discontinuation, to address thermal propagation and other pending technical issues. Accordingly, GRSP noted that a draft authorization to develop Phase 2 of the UN GTR is expected to be submitted to AC.3 and WP.29 at the November 2017 sessions. Finally, GRSP agreed to resume discussion at its December 2017 pending on AC.3 decision.

VIII. Regulation No. 12 (Steering mechanism) (agenda item 7)

Documentation: ECE/TRANS/WP.29/GRSP/2017/6

12. The expert from OICA introduced ECE/TRANS/WP.29/GRSP/2017/6, to allow alternative requirements of Regulation No. 137 to avoid redundancy of testing. GRSP adopted the proposal not amended. The secretariat was requested to submit ECE/TRANS/WP.29/GRSP/2017/6 as draft Supplement 5 to the 04 series of amendments to UN Regulation No. 12, for consideration and vote at the November 2017 sessions of WP.29 and of the Administrative Committee of the 1958 Agreement (AC.1).

IX. Regulation No. 14 (Safety-belt anchorages) (agenda item 8)

Documentation: ECE/TRANS/WP.29/GRSP/2017/8
Informal documents GRSP-61-01 and GRSP-61-18

13. The expert from OICA introduced ECE/TRANS/WP.29/GRSP/2017/8 as the official proposal to remove ISOFIX anchorages from the Regulation and to incorporate them into the new Regulation that was dedicated to these anchorages only (ECE/TRANS/WP.29/GRSP/2017/7, see para. 45). GRSP adopted the proposal, as amended below, as the most viable solution to solve the incompatibility of the requirements of the Regulation with the existing designs of Child Restraint Systems (CRS) in Australia and including UN Regulation No. 14 into Annex 4 of the future UN Regulation No. 0 on the International Whole Vehicle Type Approval (IWVTA). The secretariat was requested to submit the proposal as draft 08 series of amendments to UN Regulation No. 14, for consideration and vote at the November 2017 sessions of WP.29 and AC.1.

Paragraph 3.2.1., amend to read:

"3.2.1. Drawings of the general vehicle structure on an appropriate scale, showing the positions of the belt anchorages, of the effective belt anchorages (where appropriate) **and detailed drawings of the belt anchorages**;"

14. The expert from Germany introduced GRSP-61-01 to clarify that on the driver's seat of vehicle categories M_2 and M_3, only three point belts would be allowed. GRSP agreed on the clarifications proposed by the expert from Germany and adopted the proposal as reproduced in Annex III of this report. The secretariat was requested to submit the proposal as part (see para. 13 above) of the draft 08 series of amendments to UN Regulation No. 14, for consideration and vote at the November 2017 sessions of WP.29 and AC.1.

15. The expert from Germany also introduced GRSP-61-18, aimed at clarifying that rear seat rows can only have one central seating position with a reduced minimum distance of 240 mm and 350 mm for the other rear seats. The expert from EC raised a time reservation and suggested inserting transitional provisions as well. GRSP agreed to resume discussion on this subject at its December 2017 session and requested the secretariat to distribute GRSP-61-18 with an official symbol.

X. Regulation No. 16 (Safety-belts) (agenda item 9)

Documentation: ECE/TRANS/WP.29/GRSP/2016/13
ECE/TRANS/WP.29/GRSP/2017/9
Informal documents GRSP-61-02 and GRSP-61-13

16. The expert from OICA introduced ECE/TRANS/WP.29/GRSP/2017/9 to insert the cross reference to the new UN Regulation on ISOFIX. GRSP adopted the proposal as amended below. The secretariat was requested to submit the proposal as draft Supplement 10 to the 06 series and Supplement 2 to the 07 series of amendments to UN Regulation No. 16, for consideration and vote at the November 2017 sessions of WP.29 and AC.1.

Paragraph 8.3.6., amend to read:

"8.3.6. …

The pitch angle used for the geometrical assessment above shall be as measured in paragraph 5.2.2.4 **or Regulation No. [XX].**

…"

17. The expert from Germany introduced GRSP-61-02, matching the proposal on safety-belt anchorages (GRSP-61-01) (see para. 14 above). The expert from OICA requested transitional provisions for the entry into force of the proposed requirements. GRSP agreed to resume discussion at its December 2017 session on the basis of a revised proposal tabled by the expert from Germany.

18. The expert from France introduced GRSP-61-13 which clarified the second level of warning to detect occupants on the rear seating positions. GRSP noted some disagreement on the proposed requirements and invited the experts from France, EC and OICA to cooperate. Finally, GRSP agreed to resume discussion at its December 2017 session and requested the secretariat to distribute GRSP-61-13 with an official symbol at that session.

19. GRSP resumed discussion on ECE/TRANS/WP.29/GRSP/2016/13 which aims at introducing provisions for airbag deactivation devices (where fitted). The expert from Australia requested that more statistical data was needed to support the proposal and reiterated his invitation to experts to provide information, otherwise he would withdraw the proposal at the December 2017 session of GRSP.

XI. Regulation No. 17 (Strength of seats) (agenda item 10)

Documentation: ECE/TRANS/WP.29/GRSP/2017/12
Informal documents GRSP-61-10, GRSP-61-19-Rev.1 and GRSP-61-26

20. The expert from CLEPA introduced ECE/TRANS/WP.29/GRSP/2017/12 to clarify the testing of seats with and without head restraints. Moreover, the expert from CLEPA introduced GRSP-61-26 incorporating the comments received from the experts from Germany and EC. Finally, GRSP adopted ECE/TRANS/WP.29/GRSP/2017/12 as amended by Annex IV to this report. The secretariat was requested to submit the proposal as draft Supplement 4 to the 08 series of amendments to UN Regulation No. 17 for consideration and vote at the November 2017 sessions of WP.29 and AC.1.

21. The expert from OICA introduced GRSP-61-10 to correct a reference. GRSP adopted the proposal as reproduced in Annex IV to this report. The secretariat was requested to submit the proposal as draft Corrigendum 1 to the Revision 5 to UN Regulation No. 17, for consideration and vote at the November 2017 sessions of WP.29 and AC.1.

22. The expert from Germany introduced GRSP-61-19-Rev.1 to clarify that safety-belts and components should still in function after the load retention test. The expert from OICA argued that inevitably after the test some components would be damaged and raised a study reservation. GRSP agreed to resume discussion at its December 2017 session and requested the secretariat to distribute GRSP-61-19-Rev.1 with an official symbol.

XII. Regulation No. 22 (Protective helmets) (agenda item 11)

Documentation: Informal documents GRSP-61-22, GRSP-61-30 and GRSP-61-31

23. The expert from the Netherlands informed GRSP (GRSP-61-30) on the state of the art of the development of a standard in his country on protective helmets designed for riders of bikes assisted by an electric engine (pedelec). He clarified that a working group of the Dutch Standardization Institute (NEN), with the participation of the Netherlands Organization for applied scientific research (TNO), was developing a national technical agreement on test requirements for helmets of this kind that would be probably less stringent than those of UN Regulation No. 22. He informed GRSP that studies on this subject were available on the TNO websites. The expert from France informed GRSP that their national law for high powered pedelec is more stringent than the EU Regulation. He added that pedelec should be registered as mopeds and that riders should wear helmets that were type approved according to UN Regulation No. 22. He expressed concerns that allowances on certain L_1 category of vehicles, such as pedelec, would be requested by other L_1 users by decreasing road safety. The expert from Sweden reiterated her request for a more real world data, technical information as well as active participation from the helmet industry at GRSP. The expert from the Netherlands stated that in his country it is possible to ride mopeds without helmets, while in Germany it requires a suitable helmet and that GRSP was not responsible for enforcement. The expert from Italy reminded that the helmet issue was speed related and that UN Regulation No. 22 protects riders from the point of view of speed. He concluded that the experience from the Netherland would be interesting for the future discussions.

24. GRSP noted the summary report (GRSP-61-31) of the regional workshop on motorcycle helmets organized by the UNECE secretariat in Malaysia on 7 April 2017 to promote safety of two-wheeler riders. It was noted that all information were available from:

www.unece.org/united-nations-special-envoy-for-road-safety/un-sgs-special-envoy-for-road-safety.html

25. The expert from IMMA remarked that crash situations in which two-wheelers are involved are quite complex and that the lack of data does not help to clarify dynamics. However, he stated the support of his organization on any activity of the secretariat to improve Powered Two Wheeler (PTW) safety.

26. Finally, GRSP noted the leaflet on safety helmets (GRSP-61-22) translated by the expert from the Republic of Korea in Korean language and encouraged similar initiatives from other delegations. At the same time, GRSP agreed to resume consideration of this agenda item at its December 2017 session.

XIII. Regulation No. 25 (Head restraints) (agenda item 12)

Documentation: ECE/TRANS/WP.29/GRSP/2015/22

27. The expert from the Netherlands withdrew ECE/TRANS/WP.29/GRSP/2015/22. GRSP agreed to remove this item from the agenda of the December 2017 session.

XIV. Regulation No. 44 (Child restraint systems) (agenda item 13)

Documentation: ECE/TRANS/WP.29/GRSP/2017/10
ECE/TRANS/WP.29/GRSP/2017/13
ECE/TRANS/WP.29/GRSP/2017/14
Informal documents GRSP-61-14-Rev.1 and GRSP-61-32

28. The expert from OICA introduced ECE/TRANS/WP.29/GRSP/2017/10 which aligns the text of the Regulation for the purpose of splitting UN Regulation No. 14. GRSP adopted the proposal not amended and requested the secretariat to submit it for consideration and vote at the November 2017 sessions of WP.29 and AC.1 as draft Supplement 13 to the 04 series of amendments to UN Regulation No. 44.

29. The expert from the Netherlands introduced GRSP-61-14-Rev.1 superseding ECE/TRANS/WP.29/GRSP/2017/13 aimed at excluding dangerous interpretations on the installation of CRS and introducing amendments proposed by the expert from CLEPA (GRSP-61-32). GRSP adopted ECE/TRANS/WP.29/GRSP/2017/13 as amended by Annex V to this report. The secretariat was requested to submit the proposal for consideration and vote to the November 2017 sessions of WP.29 and AC.1 as part (see para. 28 above) of draft Supplement 13 to the 04 series of amendments to UN Regulation No. 44.

30. The expert from the Netherlands introduced ECE/TRANS/WP.29/GRSP/2017/14 on the description of the "new-born" manikins Q0 and P0. GRSP adopted the proposal not amended and requested the secretariat to submit it for consideration and vote to the November 2017 sessions of WP.29 and AC.1 as part (see paras. 28 and 29 above) of draft Supplement 13 to the 04 series of amendments to UN Regulation No. 44.

XV. Regulation No. 94 (Frontal collision) (agenda item 14)

Documentation: Informal document GRSP-61-24

31. The expert from the Republic of Korea introduced GRSP-61-24 to inform GRSP about research and safety testing activities on L_7 categories of vehicles. She also stated that Korea is planning to develop a frontal collision requirement for L_7 category vehicles. The expert from EC informed GRSP that a study by the European Union on an initial assessment of additional functional safety of this category of vehicles was available at: https://circabc.europa.eu/sd/a/1adac91f-a146-4304-8e50-873ab2292609/2014%20-%20Final%20report_%20Provision%20of%20information%20and%20services%20to%20perform%20an%20initial%20assessment%20of%20additional%20functional%20safety%20and%20vehicle%20construction%20requirements%20for%20L7e-A%20heavy%20on-road%20quads.html. However, he added that the study did not show enough crash-worthiness data to justify an action plan. Moreover, he offered his availability, if needed, to cooperate with the expert from the Republic of Korea to adapt existing UN Regulations or in the development of a new UN Regulations to address this issue. The expert from France added that the fleet of L_7 categories was increasing in his country and he volunteered to provide domestic accident data at the December 2017 session of GRSP. The Chair of GRSP, recalling a previous presentation made by the expert of his country at the May 2016 session (see GRSP-59-18) stressed the need to address the roadworthiness issue related to this category of vehicles, especially frontal collision as performed by Euro NCAP (see ECE/TRANS/WP.29/1126, para. 86). GRSP agreed to resume discussion on this issue at its December 2017 session on the basis of further research data and follow-up by WP.29 at its November 2017 session.

XVI. Regulation No. 100 (Electric power trained vehicles) (agenda item 15)

Documentation: ECE/TRANS/WP.29/GRSP/2016/7

32. In absence of the expert from Belgium, the secretary of the Working Party on General Safety Provisions (GRSG) informed GRSP that at the October 2016 session of GRSG, the expert from Belgium presented a detailed analysis showing that the removal of the safety prescriptions for trolleybuses from UN Regulation No. 107 and their insertion in UN Regulation No. 100 would avoid a double type approval process. However, GRSG did not fully support their proposal and preferred to only align both Regulations. GRSP agreed to resume discussion on this subject at its December 2017 session. The expert from France stated that his country was following with interest the development of truck with trolley and the lack of provisions for trucks in UN Regulation No. 107 will create a legislative void for this kind of vehicles. The expert from Japan informed GRSP that trolley buses were regulated by railways rules and opposed to allocate provisions on trolley into UN Regulation No. 100. GRSP agreed to resume discussion at its December 2017 session awaiting further information by the expert from Belgium and follow-up of discussion of GRSG.

XVII. Regulation No. 127 (Pedestrian safety) (agenda item 16)

33. No new information was provided under this agenda item.

XVIII. Regulation No. 129 (Enhanced Child Restraint Systems) (agenda item 17)

Documentation: ECE/TRANS/WP.29/GRSP/2017/11
ECE/TRANS/WP.29/GRSP/2017/15
ECE/TRANS/WP.29/GRSP/2017/16
ECE/TRANS/WP.29/GRSP/2017/17
Informal documents GRSP-61-15-Rev.1, GRSP-61-16-Rev.1 and GRSP-61-17-Rev.2, GRSP-61-23, GRSP-61-27, GRSP-61-28 and GRSP-61-33

34. The expert from OICA introduced ECE/TRANS/WP.29/GRSP/2017/11 to update the cross references to UN Regulation No. 14 and to the new UN Regulation on ISOFIX. He also presented GRSP-61-27 to introduce the same update to the original text of UN Regulation No. 129. GRSP adopted ECE/TRANS/WP.29/GRSP/2017/11, as amended by Annex VI and GRSP-61-27 as reproduced in Annex VI to this report. The secretariat was requested to submit the proposals for consideration and vote at the November 2017 sessions of WP.29 and AC.1 as: (i) draft Supplement 6 to UN Regulation No. 129 (GRSP-61-27), (ii) draft Supplement 3 to the 01 series and (iii) draft Supplement 2 to the 02 series of amendments to Regulation No. 129 (ECE/TRANS/WP.29/GRSP/2017/11).

35. The expert from France, Chair of the IWG on Enhanced Child Restraint Systems (ECRS), gave a presentation (GRSP-61-28) on the work progress of the IWG on amendments to the UN Regulation. He explained that ECE/TRANS/WP.29/GRSP/2017/15 and ECE/TRANS/WP.29/GRSP/2017/16 were aimed, amongst others, at introducing provisions for ECRS equipped with impact shields as such restraint systems were not yet covered by the 01 and 02 series of amendments. The expert from CLEPA gave a presentation (GRSP-61-33) showing concerns on the proposals tabled by France. The expert from OICA raised concern on the increased head excursion (840 mm) during the dynamic test on rearward-facing CRS. The expert from France finally introduced GRSP-61-15-Rev.1 and GRSP-61-16-Rev.1 superseding respectively

ECE/TRANS/WP.29/GRSP/2017/15 and ECE/TRANS/WP.29/GRSP/2017/16 and including the comments received. GRSP adopted ECE/TRANS/WP.29/GRSP/2017/15 and ECE/TRANS/WP.29/GRSP/2017/16 as amended by Annex VI to this report. The secretariat was requested to submit the proposals for consideration and vote at the November 2017 sessions of WP.29 and AC.1 as part (see para. 34 above): (i) draft Supplement 3 to the 01 series (ECE/TRANS/WP.29/GRSP/2017/15) and (ii) Supplement 2 to the 02 series of amendments to UN Regulation No. 129 (ECE/TRANS/WP.29/GRSP/2017/16).

36. The expert from France introduced GRSP-61-17-Rev.2, superseding ECE/TRANS/WP.29/GRSP/2017/17 aimed at introducing the third phase of the UN Regulation which is meant to introduce "Universal belted" and "Specific vehicle belted" category of CRS. He further explained that the basic principle of Phase 3 was to reach a compromise from misuse and bad installation and having as much as possible seat places to install CRS where ISOFIX anchorages cannot be allocated. Moreover, GRSP noted the request of guidance to Contracting Parties proposed in GRSP-61-28 concerning: (i) which kind of combinations of ECRS should be allowed (e.g. ISOFIX and Universal Belted) (ii) under which conditions and (iii) guiding principles. The expert from the Netherlands raised concerns on "inserts" used on CRS to adapt them to the size of the occupant. He stated that inserts should be identified (labelled with identification and with size information) and that requirements should be devised to prevent camouflage of bad CRS. The expert from the United Kingdom supported the principle of a performance-based approach and requested more data on misuse. However, he shared the concern of the expert from the Netherlands. The expert from IC stated that ISOFIX had the priority to avoid misuse while other solutions and combinations with ISOFIX were just secondary and should be limited. The experts from Germany and Sweden raised a study reservation and stated that "plug-and-play" solution was the key principle for having a simple and efficient system; while now the ECRS IWG was opening to combinations that could have misuse implications.

37. GRSP agreed to resume discussion on Phase 3 of the UN Regulation at its December 2017 session on the basis of more data analyses. In the same time, GRSP referred back to the IWG GRSP-61-17-Rev.2 and invited representatives of Contracting Parties of the 1958 Agreement to participate in the 21-22 June meeting of the IWG to cover the request of guidance mentioned above.

38. Finally, GRSP noted a translation into Korean language of the leaflet (GRSP-61-23) promoting UN Regulation No. 129 and appreciated the contribution of the expert from the Republic of Korea in promoting the UN Regulation in his country.

XIX. Regulation No. 134 (Hydrogen and Fuel Cells Vehicles (HFCV)) (agenda item 18)

Documentation: ECE/TRANS/WP.29/GRSP/2017/5

39. GRSP noted ECE/TRANS/WP.29/GRSP/2017/5 tabled by the expert from Japan proposing improvements to the test requirements. GRSP adopted the proposal as amended by Annex VII to the report. The secretariat was requested to submit the proposal for consideration and vote at the November 2017 sessions of WP.29 and AC.1 as draft Supplement 3 to UN Regulation No. 134.

XX. Regulation No. 135 (Pole Side Impact) (PSI)) (agenda item 19)

40. No new information was provided under this agenda item.

XXI. Regulation No. 136 (Electric Vehicles of category L (EV-L)) (agenda item 20)

41. No new information was provided under this agenda item.

XXII. Regulation No. 137 (Frontal impact with focus on restraint systems) (agenda item 21)

42. The expert from EC informed GRSP about the recent study conducted in Europe on the real benefits in terms of safety introduced by the UN Regulation. He added that the study casts doubts on its effectiveness on the European vehicle fleet. He suggested that experts consult the above-mentioned study at:

https://bookshop.europa.eu/en/assessment-of-intended-and-unintended-consequences-of-vehicle-adaptations-to-meet-advanced-frontal-crash-test-provisions-pbNB0514074/?CatalogCategoryID=r2yep2OwGwsAAAFL2x

XXIII. Collective amendments to Regulations Nos. 16, 44, 94 and 129 (agenda item 22)

Documentation: ECE/TRANS/WP.29/GRSP/2015/30
Informal document GRSP-61-29

43. The expert from EC introduced GRSP-61-29, superseding ECE/TRANS/WP.29/GRSP/2015/30, to harmonize the information of the airbag warning label on the correct installation of CRS. The expert from France argued that the proposed size of the area for part number marking (5 mm x 20 mm) was too small. The expert from OICA raised the same concern and a study reservation. GRSP agreed to resume discussion at its December 2017 session and requested the secretariat to distribute GRSP-61-29 with an official symbol.

XXIV. Collective amendments to Regulations Nos. 44 and 129 (agenda item 23)

Documentation: ECE/TRANS/WP.29/GRSP/2017/4

44. The expert from the Netherlands introduced ECE/TRANS/WP.29/GRSP/2017/4 to prevent the approval marking from being replaced by an Unique Identifier (UI) in UN Regulations Nos. 44 and 129. GRSP adopted ECE/TRANS/WP.29/GRSP/2017/4 not amended. The secretariat was requested to submit the proposals for consideration and vote at the November 2017 sessions of WP.29 and AC.1 as part (see paras. 28, 29 and 30) of Supplement 13 to the 04 series of amendments to UN Regulation No. 44, as part of (see paras. 34 and 35) draft Supplement 3 to the 01 series and as part (see paras. 34 and 35) of Supplement 2 to the 02 series of amendments to Regulation No. 129.

XXV. Draft new Regulation on ISOFIX anchorage systems, ISOFIX top tether anchorages and i-Size seating positions (agenda item 24)

Documentation: ECE/TRANS/WP.29/GRSP/2017/7
Informal documents GRSP-58-13, GRSP-61-06-Rev.1 and GRSP-61-11

45. The expert from OICA introduced the draft new UN Regulation (ECE/TRANS/WP.29/GRSP/2017/7) on ISOFIX. He also provided for information the list of UN Regulations (GRSP-61-11) affected by the splitting of UN Regulation No. 14. He also introduced GRSP-61-06-Rev.1, amending ECE/TRANS/WP.29/GRSP/2017/7. GRSP adopted the proposal as amended by Annex VIII to the report for submission to WP.29 in November 2017..

46. Finally, GRSP agreed to keep GRSP-58-13 as a reference in the agenda of the next session for possible future discussion on harmonization of requirements on ISOFIX.

XXVI. Hydrogen and Fuel Cell Vehicles of category L (agenda item 25)

Documentation: Informal documents GRSP-61-03 and GRSP-61-04

47. The expert from Japan introduced the draft UN Regulation on Hydrogen and Fuel Cell Vehicles of category L (GRSP-61-03) with a presentation (GRSP-61-04). He explained that his country had established a national standard with similar provisions. However, he added that the mutual recognition of type approvals ensured by the 1958 Agreement to enable faster deployment such vehicles thus the reason for proposing a new UN Regulation instead of amending the UN GTR No. 13. GRSP requested experts to provide their comments on the proposal to the expert from Japan by the end of July. GRSP expected to resume discussion at its December 2017 session on the basis of a revised proposal and requested the secretariat to keep GRSP-61-03 as a reference on the agenda of the next session.

XXVII. Other business (agenda item 26)

A. Exchange of information on national and international requirements on passive safety

Documentation: Informal document GRSP-61-24

48. Refer to agenda item 14 (see para. 31 of this report).

B. Definition and acronyms in the Regulations under the responsibilities of GRSP

49. The GRSP Chair informed GRSP about his intention to present a list of acronyms and abbreviations under the 1998 Agreement at the June 2017 session of WP.29 to update the excel files, that are permanently appended to its website (www.unece.org/trans/main/wp29/wp29wgs/wp29gen/acronyms_definitions.html).

C. Development of the International Whole Vehicle Type Approval (IWVTA) system and involvement of the Working Parties (GRs)

50. GRSP noted that Revision 3 of the 1958 Agreement was expected to enter into force by mid-September 2017. It was also noted that at the November 2017 session of WP.29 the following documents would be discussed: (a) an explanatory document on UN Regulation No. 0 and (b) a question and answer document on Revision 3 of the 1958 Agreement and (c) a revision of the guidance document of administrative and regulatory procedures. Finally, GRSP was informed that the permanent missions of Contracting Parties represented in EXCOM did not yet reached an agreement on the financing of DETA for the period 2018-2019.

D. Highlights of the March 2017 session of WP.29

51. The Secretary reported on the highlights of the 171st session of WP.29 (ECE/TRANS/WP.29/1129).

E. Three-dimensional H-point machine

52. The expert from Spain, Chair of the IWG on the harmonization of specifications of the 3-D H-point machine, informed GRSP that the work of the group would start on 24 May 2017 with a WebEx meeting and that a notification would be sent to the original list of contact experts of the IWG.

F. Intelligent transport systems

53. GRSP note the progress of work activities on automated vehicles of the IWG on Intelligent Transport Systems and Autonomous Driving (ITS/AD). The expert from France noted that the activities of the task force on Cyber Security, including software update on Over The Air (OTA) could have an influence on performances of safety devices such as air-bag deployment. Moreover, he clarified that the assumption that the future market deployment of autonomous vehicle would supersede the need of passive safety devices was incorrect. Therefore, he concluded that mixed traffic conditions of traffic would, in the future, still need passive safety equipment on vehicles because advanced automated vehicles would share the roads with less advanced ones and also other road users (e.g.: pedestrians, cyclists, two-wheelers).

G. Performance of vehicle software based systems subjected to Regulations

54. Noting to the lack of discussion on this subject since its insertion on the agenda, GRSP agreed that the work on this subject should be referred to the activities of the IWG ITS/AD and its task force since (i) GRSP did not have the expertise and (ii) to avoid duplication of work. Accordingly, GRSP agreed to remove this item from the agenda of its next sessions.

H. Regulation No. 29 (Cabs of commercial vehicles)

Documentation: Informal document GRSP-61-20

55. The expert from Germany introduced GRSP-61-20, to provide specifications on how to secure a cab mounted on a test rig and to improve repeatability of the test. The secretariat was requested to distribute GRSP-61-20 with an official symbol at the December 2017 session of GRSP.

I. Regulation No. 95 (Lateral collision)

Documentation: Informal document GRSP-61-21

56. The expert from Germany introduced GRSP-61-21 which aimed at defining the conditions of "door open after the test collision". The proposal received a general study reservation from GRSP experts especially on the proposed traction force limit applied to the outer side of the door. GRSP agreed to resume discussion on this subject at its December 2017 session on the basis of a revised proposal to be submitted by the expert from Germany. In the mean time, it was agreed to keep GRSP-61-21 as a reference on the agenda of the next session.

J. Tributes

57. GRSP learned that Mr. Y. Kadotani (Japan) would no longer participate in future sessions of GRSP. The group acknowledged his fruitful contribution to the work of GRSP and wished him all the best in his future activities.

58. GRSP noted that Mr. P. Castaing (France) was retiring and would no longer attend the sessions. GRSP acknowledged his commitment as Chair of the IWG on ECRS and continued contributions during all the years of his participation in the sessions. GRSP wished Mr. Castaing a long and happy retirement and recognized the commitments of Messrs. Kadotani and Castaing with a long applause.

XXVIII. Provisional agenda for the next session (agenda item 27)

59. The sixty-second session is scheduled to be held in Geneva from 12 December (9.30 a.m.) to 15 (12.30 p.m.) December 2017. GRSP noted that the deadline for the submission of official documents to the secretariat is 15 September 2017, twelve weeks prior to the session. GRSP agreed to the following provisional agenda:

1. Adoption of the agenda.
2. Global technical regulation No. 7 (Head restraints).
3. Global technical regulation No. 9 (Pedestrian safety):
   - (a) Proposal for Amendment 2 (Phase 2) of the global technical regulation;
   - (b) Proposal for Amendment 3 of the global technical regulation;
   - (c) Proposal for Amendment 4 of the global technical regulation.
4. Global technical regulation No. 13 (Hydrogen and Fuel Cell Vehicles).
5. Harmonization of side impact dummies.
6. Global technical regulation on electric vehicles.
7. Regulation No. 14 (Safety-belt anchorages).
8. Regulation No. 16 (Safety-belts).
9. Regulation No. 17 (Strength of seats).
10. Regulation No. 22 (Protective helmets).
11. Regulation No. 29 (Cab strength).
12. Regulation No. 44 (Child restraint systems).

13. Regulation No. 94 (Frontal collision).
14. Regulation No. 95 (Lateral collision).
15. Regulation No. 100 (Electric power trained vehicles).
16. Regulation No. 127 (Pedestrian safety).
17. Regulation No. 129 (Enhanced Child Restraint Systems).
18. Regulation No. 134 (Hydrogen and Fuel Cell Vehicles (HFCV)).
19. Regulation No. 135 (Pole Side Impact (PSI)).
20. Regulation No. 136 (Electric Vehicles of category L (EV-L)).
21. Regulation No. 137 (Frontal impact with focus on restraint systems).
22. Collective amendments to Regulations Nos. 16, 44, 94, 129 and 137.
23. Draft new Regulation on ISOFIX anchorage systems, ISOFIX top tether anchorages and i-Size seating positions.
24. Hydrogen and Fuel Cell Vehicles of category L.
25. Election of officers.
26. Other business:
    (a) Exchange of information on national and international requirements on passive safety;
    (b) Definitions and acronyms in Regulations under GRSP responsibilities;
    (c) Development of the International Whole Vehicle Type Approval (IWVTA) system and involvement of the Working Parties;
    (d) Highlights of the June and November 2017 sessions of WP.29;
    (e) Three-dimensional H-point machine;
    (f) Intelligent transport systems.

Annex I

List of informal documents (GRSP-61-…) distributed without an official symbol during the session

No.	*Transmitted by*	*Agenda item*	*Language*	*Title*	*Follow-up*
01	Germany	8	E	Proposal for amendments of Regulation No. 14 (Safety-belt anchorages)	(d)
02	Germany	9	E	Proposal for amendments of Regulation No. 16 (Safety-belts)	(a)
03	Japan	25	E	Draft Regulation on hydrogen-fuelled vehicles of categories L1, L2, L3, L4 and L5	(a)
04	Japan	25	E	UN Regulation for Hydrogen-Fuelled Vehicles of Categories L1, L2, L3, L4 and L5	(a)
05	GRSP Chair	1	E	Running order of GRSP 61st session	(a)
06/ Rev.1	OICA	24	E	Draft new Regulation on ISOFIX anchorage systems, ISOFIX top tether anchorages and i-Size seating positions	(d)
07	EVS IWG	6	E	Draft global technical regulation on electric vehicle safety - Clean copy	(d)
08	EVS IWG	6	E	Proposal for Draft global technical regulation on electric vehicle safety - Proposal of amendments to ECE/TRANS/WP.29/GRSP/2017/02	(d)
09	EVS IWG	6	E	Final report of EVS IWG	(d)
10	OICA	10	E	Proposal for a Corrigendum to UN Regulation No. 17 - Revision 5 (Strength of seats)	(d)
11	OICA	24	E	Regulation 14 and New ISOFIX Regulation: List of other affected UN Regulations	(a)
12	Rep. of Korea	3(c)	E	Proposal for Supplement 1 to the 07 series of amendments to Regulation No. 16 (Safety belts)	(a)
13	(France)	9	E	Proposal for Supplement 1 to the 07 series of amendments to Regulation No. 16 (Safety belts)	(b)
14/ Rev.1	NL	13	E	Amendments to justification of ECE/TRANS/WP.29/GRSP/2017/13	(d)
15/ Rev.1	France	17	E	Proposal for Supplement 3 to the 01 series of amendments to Regulation No. 129	(d)

No.	*Transmitted by*	*Agenda item*	*Language*	*Title*	*Follow-up*
16/ Rev.1	France	17	E	Proposal for Supplement 2 to the 02 series of amendments to Regulation No. 129	(d)
17/ Rev.2	France	17	E	Proposal for the 03 series of amendments as Phase 3 of Regulation No. 129 (Enhanced Child Restraint Systems)	(c)
18	Germany	8	E	Proposal for Supplement 8 to the 07 series of amendments to Regulation No. 14 (Safety-belt anchorages)	(b)
19/ Rev.1	Germany	10	E	Proposal for amendments of Regulation No. 17 (Strength of seats)	(b)
20	Germany	26(h)	E	Proposal for amendments of Regulation No. 29 (Cabs of commercial vehicles)	(b)
21	Germany	26(i)	E	Proposal for amendments of Regulation No. 95 (lateral collision)	(a)
22	Rep. of Korea	11	E	Translation in Korean of UNECE leaflet on Safety Helmets (Regulation No. 22)	(a)
23	EC	17	E	Translation in Korean of UNECE leaflet on UN Regulation No. 129	(a)
24	Rep. of Korea	14 & 26(a)	E	Introduction plan for implementing safety requirements of micro mobility	(a)
25	United States of America	6	E	Electric Vehicles Safety Global Technical Regulation	(a)
26	CLEPA	10	E	Proposal for Supplement 4 to the 08 series of amendments to Regulation No. 17 (Strength of seats)	(d)
27	OICA	17	E	Proposal for supplement 5 to the 00 series of amendments to Regulation No. 129 (Enhanced Child Restraint Systems)	(d)
28	France	17	E	Amendments to UN Regulation No. 129 (ECRS)	(a)
29	EC	22	E	Collective amendments to Regulations Nos. 16, 44, 94, 129 and 137	(b)
30	NL	11	E	Exchange of information on national research on speed pedelec helmets	(a)
31	Secretariat	11	E	Regional Workshop on Motorcycle Helmets Kuala Lumpur, Malaysia 7 April 2017 - Summary Report	(a)
32	CLEPA	13	E	Review of GRSP-2017-13 - Proposal for amendments to Regulation No. 44	(a)
33	CLEPA	17	E	Regulation No. 129 - CLEPA response to GRSP-61-28	(a)

Notes:

(a) Consideration completed or superseded.

(b) Continue consideration at the next session with an official symbol.
(c) Continue consideration at the next session as an informal document.
(d) Adopted and to be submitted to WP.29.

Annex II

Draft global technical regulation on Electric Vehicle Safety (EVS)

Amendments adopted to ECE/TRANS/WP.29/GRSP/2017/2 (see para. 10 to the report)

Table of contents

Remove all square brackets from the table.

Following headlines, amend to read:

"7.3.9. **(Reserved)**

8.2.9. **(Reserved)** "

Statement of technical rationale and justification

Figure 9 (paragraph 72), the description in the figure, amend to read:

"Systems > 350 V are subject to IEC60479-**2** as discharge pulses are < 10 ms"

Paragraph 157., amend to read:

"157. Even if the same fuel is used **and the relative position of the object that is exposed to the flame is the same**, the heat flux cannot be the same unless the shape of **flame is also equivalent**. Therefore, to reproduce the same heat flux the shape of flame should be appropriately **controlled**."

Figure 22, amend to read:

"Figure 22

Test scene photographs and temperature measurements of a gasoline pool fire and an LPG burner fire

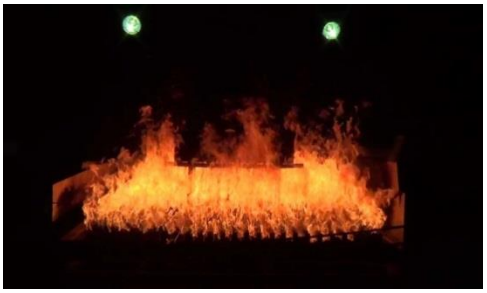

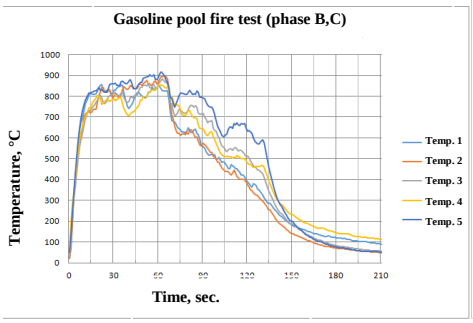

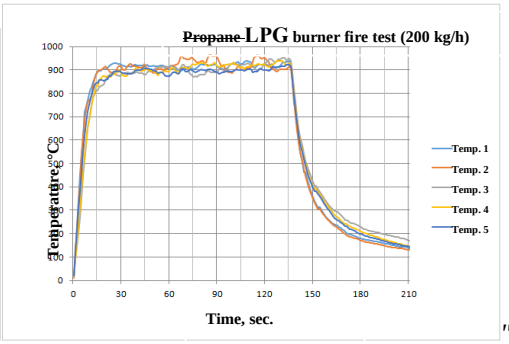

"

Paragraph 232., insert new footnotes [27] and [28] and amend to read:

"232. The risk for direct contact depends on the location of the charging interface on the vehicle. Charging interfaces, located out of reach are exempted from the requirements of direct contact **for all heavy duty vehicles**. **Anthropometric data[27, 28] has been used to calculate appropriate distances for Category 1-2 vehicles with roof mounted charging devices to safe-guard vehicle occupants. Calculation of wrap around distance for roof mounted charging devices for Category 2 vehicles will be considered in gtr phase 2 since these operate on different principles and the technology is less mature. Until this time, Category 2 vehicles which are professionally operated are exempted. Out of reach conditions for live parts located underneath for all heavy duty vehicles will be investigated in gtr phase 2.**

---

27 **Pheasant, S. (1996)** ***Bodyspace – Anthropometry, Ergonomics and the Design of Work,*** **London: Taylor & Francis.**

28 **Gordon, C.C.** ***et al.*** **(1989)** ***Antropometric Survey of U.S. Army Personnel: Interim Report.*** **United States Army Natick Research, Development and Engineering Center, Natick, Massachussets. http://www.dtic.mil/dtic/tr/fulltext/u2/a209600.pdf** "

Paragraph 233., remove square bracket and amend to read:

"233. **Overcurrent protection will be considered in gtr phase 2 for heavy vehicles due to time constraints. The current test proposal is vehicle based and was deemed inappropriate for heavy vehicles as it is unclear how to apply on vehicles that have different charging technologies. More discussion is needed in phase 2 to address different charging methodologies.**"

Paragraph 240., amend to read:

"240. Focus topics for Phase 2 are expected to include:

(a) water immersion test;

(b) long-term fire resistance test;

(c) REESS rotation tests;

(d) REESS vibration profile;

(e) **flammability,** toxicity and corrosiveness of vented gas (**e.g.** quantification of venting for tests addressing safety of REESS post-crash, potential risk of 'toxic gases' from non-aqueous electrolyte);

(f) thermal propagation and methods of initiation in battery system;

(g) post-crash REESS safety assessment and stabilization procedures;

(h) light electric vehicles (e.g. categories L_6 and L_7[29]);

(i) **p**rotection during AC and DC charging and feeding process. "

Paragraph 243., remove square bracket and amend to read:

"• The United States of America -- FMVSS 305 – Electric-Powered Vehicles: Electrolyte Spillage and Electrical Shock Protection

---

29 As defined in the Consolidated Resolution on the Construction of Vehicles (R.E.3.), document ECE/TRANS/WP.29/78/Rev.5, para. 2.

…

- China – GB/T 31484:2015 - Cycle life requirements and test methods for traction battery of electric vehicle
- China – GB/T 31485:2015 - Safety requirements and test methods for traction batt**e**ry of electric vehicle
- China – GB/T 31486:2015 - Electrical performance requirements and test methods for traction battery of electric vehicle
- China – GB/T 31467.3:2015 - Lithium-ion traction battery pack and system for Electric vehicles— Part 3: Safety requirements and test methods
- China – GB/T 18384.1:2015 - Electrically propelled road vehicles-Safety specifications-Part 1:On-board Rechargeable Energy Storage System (REESS)
- China – GB/T 18384.2:2015 - Electrically propelled road vehicles-Safety specifications-Part 2:Vehicle operational safety means and protection against failures
- China – GB/T 18384.3:2015 - Electrically propelled road vehicles-Safety specifications-Part 3 Protection of persons against electric shock
- **China – GB/T 31498:2015 – The safety requirement of electric vehicle post crash**
- China – GB/T 24549:2009 - Fuel cell electric vehicles - Safety requirements~~]~~
- Canada – CMVSS 305 – Electric Powered Vehicles: Electrolyte Spillage And Electrical Shock Protection
- Republic of Korea – Motor Vehicle Safety Standard, Article 18-2 – High Voltage System, **Test Procedure Table 1 – Part 47. Safety Test for High Voltage System**
- **Republic of Korea – Motor Vehicle Safety Standard, Article 18-3 – Rechargeable Energy Storage System (REESS), Test Procedure Table 1 – Part 48. Safety Test for REESS**
- Republic of Korea – Motor Vehicle Safety Standard, Article 91-4 **– High Voltage System in Crash Test, Test Procedure Table 1 – Part 47. Safety Test for High Voltage System**
- Recommendations on the Transport of Dangerous Goods, Manual of Tests and Criteria, paragraph 38.3 (LITHIUM METAL AND LITHIUM ION BATTERIES)"

Paragraph 244., amend to read:

"244. List of relevant standards for Electric Vehicle Safety:

…

- IEC 61851-1:**2017** Electric vehicle conductive charging system - Part 1: General requirements

…"

Text of Regulation

Paragraph 3.39., amend to read:

"3.39. "Rupture" means ... (see paragraphs 6.1.3.**, 6.1.6.2.4. and 8.1.3.**) "

Paragraph 5.2.2.2., the first sentence amend to read:

"5.2.2.2. Low electrical energy.

The Total Energy (TE) of unidirectional single impulse currents in the form of rectangular and sinusoidal impulses or capacitor discharges from high voltage electrical components] shall be less than 0.2 J when measured and calculated in accordance with formula (a) of paragraph 6.1.6.2.3."

Paragraph 5.2.2.4., amend to read:

"5.2.2.4. Isolation resistance.

The criteria specified in the paragraphs 5.2.2.4.1. and 5.2.2.4.2. below shall be met.

The measurement shall be conducted in accordance with paragraph **6.1.6.2.5.**"

Paragraph 5.3.2., remove square bracket.

Paragraph 5.3.3., remove square bracket.

Paragraph 5.4.10., remove square bracket.

Paragraph 5.4.12.1., remove square bracket.

Paragraph 5.4.12.2., remove square bracket.

Paragraph 5.4.12.2.1., amend to read:

"5.4.12.2.1. A risk reduction analysis using appropriate industry standard methodology (for example, IEC 61508, MIL-STD 882E, ISO 26262, AIAG DFMEA, fault analysis as in SAE J2929, or similar), which documents …"

Table 1 (paragraph 6.1.3.3.), amend the description in the table to read:

"**f**rom bur**r**s"

Paragraph 6.1.6.2.3., amend to read (modify the numbering of subpargraphs and layout):

"6.1.6.2.3. Assessment procedure for low electrical energy.

Prior to the impact a switch S_1 and a known discharge resistor R_e is connected in parallel to the relevant capacitance (Figure 8).

(a) Not earlier than 10 s … The resulting integration equals the total energy (TE) in J**:**

$$TE = \int_{tc}^{th} V_b \times I_e dt$$

(b) When Vb is measured at a point in time between 10 s and 60 s after the impact and the capacitance of the X-capacitors (Cx) is specified by the manufacturer, total energy (TE) shall be calculated according to the following formula:

$$TE = 0.5 \text{ x } C_x \text{ x } V_b^2$$

(c) When V1 and V2 (see Figure 8) are measured at a point in time between 10 s and 60 s after the impact and the capacitances of the Y-capacitors (Cy1, Cy2) are specified by the manufacturer, total energy (TEy1, TEy2) shall be calculated according to the following formulas:

$$TE_{y1} = 0.5 \text{ x } C_{y1} \text{ x } V_1^2$$

$$TE_{y2} = 0.5 \text{ x } C_{y2} \text{ x } V_2^2$$

This procedure is not applicable if the test is performed under the condition where the electric power train is not energized. "

Figure 13 (paragraph 6.2.4.3.3.4.4.) and Figure 28 (paragraph 8.2.4.3.3.4.4.), modify the figures to include "A-A":

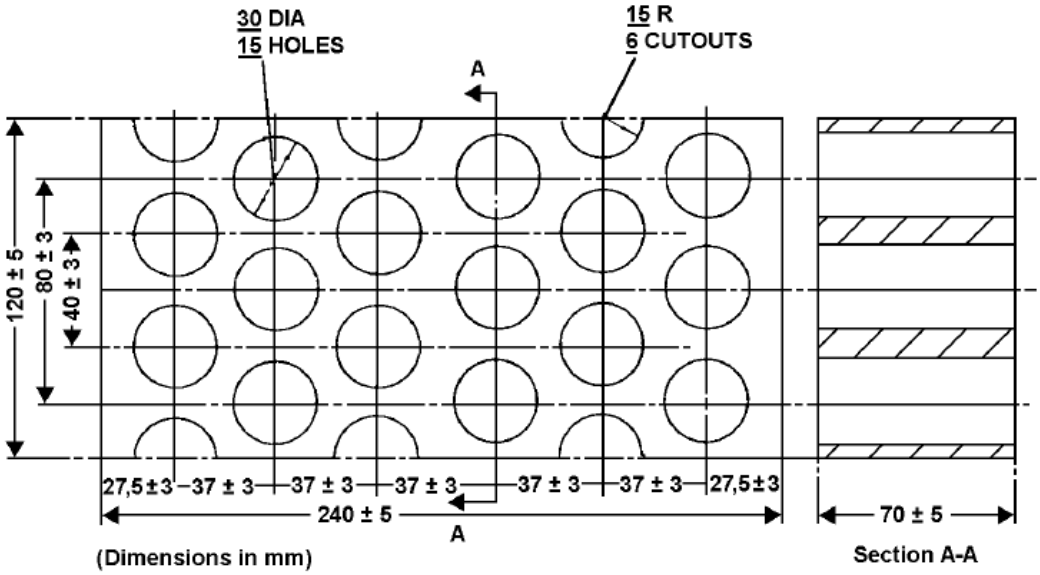

Paragraph 6.2.4.3.4.2., amend to read:

"6.2.4.3.4.2. LPG burner shall be used to produce flame to which the Tested-Device is exposed. The height of the flame shall be about 60 cm or more, without the Tested-Device. "

Paragraph 6.2.4.3.4.6., amend to read:

"6.2.4.3.4.6. The Tested-Device shall be exposed to flame for 2 minutes after the averaged temperature reach**es** 800 °C within 30 seconds. The averaged temperature shall be maintained at 800-1,100 °C for 2 minutes. "

Paragraph 7.1.1.1., amend to read:

"7.1.1.1. Protection against direct contact.

High voltage live … of the **vehicle**. **For Category 1-2 vehicles the minimum wrap around distance from the instep of the vehicle to the roof mounted charging devices is 3.00 m. In case of multiple steps due to elevated floor inside the vehicle, the wrap around distance is measured from the bottom most step at entry, as illustrated in Figure 16.**

…

(c) The voltage of the live parts becomes equal or below 60V DC or equal or below 30V AC (rms) within 1s after the connector is separated.

Figure 16
Schematics of how to measure wrap-around distance

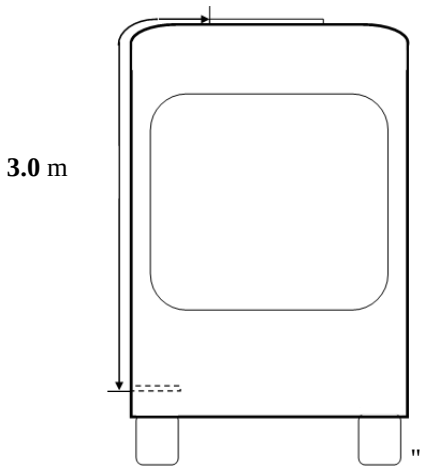

"

Paragraph 7.1.1.3. (and its subparagraphs), remove square bracket.

Paragraph 7.1.1.3.3., amend to read:

"7.1.1.3.3. If the test … paragraph 7.1.1.2.4. shall be met.

A representative vehicle shall be selected for testing and a compliant test result for this vehicle shall constitute evidence of compliance for all variations of vehicles, provided that the REESS and the REESS installation on the vehicles are the same."

Paragraph 7.2. (and its subparagraphs), remove square brackets.

Paragraph 7.2.2., remove square bracket.

Paragraph 7.2.3., remove square bracket.

Paragraph 7.3.9. through paragraph 7.3.12.2.4.3., remove square bracket.

Paragraph 7.3.9., amend to read:

"7.3.9. **(Reserved)**"

Paragraph 7.3.10., remove square bracket.

Paragraph 7.3.12.1., remove square bracket.

Paragraph 7.3.12.2., remove square bracket.

Paragraph 7.3.12.2.1., amend to read:

"7.3.12.2.1. A risk reduction analysis …"

Paragraph 8.1.5. (and its subparagraphs), remove square brackets.

Table 6 (paragraph 8.2.2.3.2.), replace the unit in the table:

"*Acceleration (m/s^2)*"

Paragraph 8.2.4.3.4.2., amend to read:

"8.2.4.3.4.2. LPG burner shall be used to produce flame to which the Tested-Device is exposed. The height of the flame shall be about 60 cm or more, without the Tested-Device. "

Paragraph 8.2.4.3.4.6., amend to read:

"8.2.4.3.4.6. The Tested-Device shall be exposed to flame for 2 minutes after the averaged temperature reach**es** 800 °C within 30 seconds. The averaged temperature shall be maintained at 800-1,100 °C for 2 minutes. "

Paragraph 8.2.5.2., amend to read:

"8.2.5.2. Installations.

This test shall be conducted either with a complete vehicle or with the complete REESS or with the REESS subsystem(s). **If the REESS consists of multiple REESS subsystems, either connected in series or in parallel, the test can be performed on a single REESS subsystem which includes an electronic management unit and (if it exists) a REESS protection device intended to be operational.** If the manufacturer chooses to test with REESS **subsystem(s), the manufacturer** shall demonstrate that the test result can reasonably represent the performance of the complete REESS with respect to its safety performance under the same conditions. **If** the electronic management unit for the REESS …"

Paragraph 8.2.9., remove square bracket and amend to read:

"8.2.9. **(Reserved)**"

Paragraph 8.2.9.1. through – paragraph 8.2.9.6., delete all sentences.

Annex 2

Opening paragraph, remove square brackets.

Figure 2, modify the entire figure including the notes:

"Figure 2
Splashing test nozzle

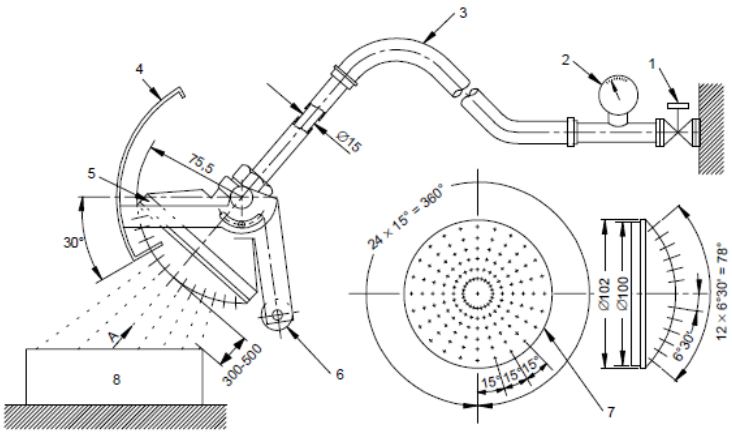

Dimensions in millimetres

Viewed according to arrow A (with shield removed)

IEC 927/01

Note:

1. Cock
2. Pressure gauge
3. **Hose**
4. Moving shield – aluminium
5. Spray nozzle
6. Counter weight"
7. Spray nozzle – brass with 121 holes ∅ 0,5:
   1. hole in centre
   2. inner circle of 12 holes at 30° pitch
   4. outer circle of 24 holes at 15° pitch
8. Machine under test

Paragraph 3., amend to read:

"**3. The entire high voltage system or each component is checked to comply with the isolation resistance requirement in paragraph 5.1.1.2.4. or paragraph 7.1.1.2.4. with the following conditions:**

(a) The electric chassis shall be simulated by an electric conductor, e.g. a metal plate, and the components are attached with theirstandard mounting devices to it.

(b) Cables, where provided, shall be connected to the component."

Paragraph 4., amend to read:

"**4. The parts designed not to be wet during operation are not allowed to be wet and no accumulation of water which could have reached them is tolerated inside the high-voltage component or system.**"

Final report on the establishment of draft UN Global Technical Regulation on Electric Vehicle Safety based on GRSP-61-09 (see para. 10 to the report)

1. The electric vehicle safety (EVS) UN global technical regulation is a result of numerous meetings and excellent cooperation between the governments of Canada, China, Japan, the Republic of Korea, the United States of America and the European Union including standards organizations, testing authorities and industry experts.

2. In 2012, the United Nations World Forum for Harmonization of Vehicle Regulations (WP.29) adopted a joint proposal by Japan, the United States of America and the European Union to establish two working groups to address the safety and environmental issues associated with electric vehicles. Later in 2012, China joined the three original co-sponsors.

3. The objective of the two working groups was to seek regulatory convergence on the global scale via the work in the framework of the 1998 Agreement.

4. The Terms of Reference (ToR) for the EVS informal working group (IWG) was adopted with the goal of establishing a UN GTR for EVs covering high voltage electrical protection, safety of electrical components, and rechargeable electric energy storage system (REESS).

5. An IWG was formed to develop in-use and post-crash safety requirements using science-based, data driven and performance-based approach.

6. Over the last five years, the IWG which was comprised of over 50 members has held 13 meetings. The meetings and development process are transparent. Documents and reports are posted on the UN website: https://www2.unece.org/wiki/pages/viewpage.action?pageId=3178628.

7. Given the complexity of issues discussed, the informal working group requested three extensions of the mandate: in November 2014 (ECE/TRANS/WP.29/2014/87), November 2015 (ECE/TRANS/WP.29/2016/30) and in March 2017 (Informal document WP.29-171-33), each time by one year. The goal of IWG is the adoption of the UN GTR by WP.29 in November 2017 session.

8. To resolve particular technical issues in an efficient manner, nine task force groups have been set up and met, in addition to numerous web conferences, nine times between October 2014 and November 2016. Task force groups successfully addressed a large number of safety related issues according to the given mandate, however, more discussion is required on some critical issues, where research and testing of methods are still in progress.

9. Under such circumstances, IWG agreed that the most appropriate way to establish the UN GTR within the given mandate was to address the agreed safety provisions in Phase 1 while leaving those safety requirements that require long-term research, verification research as well as further improvement of the UN GTR for Phase 2, which is expected to start as soon as possible.

10. This regulation applies to vehicles of Category 1 and Category 2 with a maximum design speed exceeding 25 km/h, equipped with electric power train containing high voltage bus, excluding vehicles permanently connected to the grid.

11. This regulation includes the following two sets of requirements that may be selected by Contracting Parties according to the category and gross vehicle mass (GVM) of the vehicles:

(a) For all vehicles of Category 1-1 and vehicles of Categories 1-2 and 2 with GVM of 4,536 kg or less, the requirements of paragraphs 5. and 6. shall apply in accordance with the general requirements specified in paragraph 4;

(b) For vehicles of Category 1-2 and Category 2 with GVM exceeding 3,500 kg, the requirements of paragraphs 7. and 8. shall apply in accordance with the general requirements specified in paragraph 4.

12. Specific in-use requirements aimed at preventing hazards to occupants of electric vehicles during normal operating conditions apply to the vehicles and REESS. With respect to vehicles, they address direct and indirect contact protection against electric shock and including markings of high voltage sources, electrical isolation, protection against water effects, functional safety after vehicle activation, when leaving the vehicle and shock protection during charging.

13. With respect to protection from water effects, manufacturers can choose to present evidence of component based assessment. or conduct vehicle based water tests. Alternatively, the Contracting Party may adopt an exemption from the requirements above for vehicles equipped with an isolation resistance monitoring system.

14. Performance requirements for REESS, including Battery Management System (BMS), relate to safety during the normal operation of the vehicle under vibration conditions and thermal shock and cycling caused by low and high external temperatures that provoke mechanical stress to the components. Furthermore, requirements address REESS fire resistance ensuring that vehicle occupants have adequate evacuation time, and define protection conditions for REESS in the case overcharge, over-discharge, over-temperature, over-current and external short circuit. These tests may be performed equally at the vehicle level. With respect to a fire resistance test, the IWG developed an alternative test procedure using Liquefied Petroleum Gas (LPG) burner.

15. Management of gases is a particularly important aspect of this GTR. To avoid human harm that may occur from potential toxic or corrosive emissions, for REESS other than open-type traction batteries, venting is proposed as a pass/fail criterion for the following in-use tests: vibration, thermal shock and cycling, external short circuit protection, overcharge protection, over-discharge protection, over-temperature protection and over-current protection. This regulation includes a no-fire criterion which addresses the issue of vented gas flammability.

16. The informal working group examined the feasibility to establish a robust and repeatable method to verify the occurrence of venting and the potential exposure of vehicle occupant to the gases caused by venting condition associated with combustion and/or decomposition of electrolyte, in the in-use test. No method other than visualization technique was found at this stage for verifying the occurrence of venting as a basis for assessing the influence of venting gases to vehicle occupants. Based on the outcome of

research, modifications to the requirements and methods with respect to leakage and evaporation of non-aqueous electrolyte may be necessary in the future.

17. The thermal propagation test procedure that would address the scenario of internal short circuit is currently not adopted as a requirement. Vehicle manufacturers shall make available documentation demonstrating the vehicle's ability to minimize the risk associated with single cell thermal runaway caused by an internal short circuit. Moreover, the vehicle shall provide an advance warning indication to allow occupant egress or five minutes prior to hazardous conditions inside the passenger compartment.

18. GTR introduces warnings for REESS operations and specifies requirements to evaluate the proper functioning of vehicle controls that manage REESS safe operation in overcharge, over-discharge, over temperature and overcurrent conditions.

19. Due to the complexity and varied designs of vehicle controls that manage REESS safe operation, no single test procedure could be developed that would fully evaluate whether a warning tell-tale turns on in the event of operational failure of the BMS. Therefore, manufacturers are required to provide documentation demonstrating that a warning to the driver will be provided in the event of operational failure of one or more aspects of vehicle controls that manage REESS safe operation.

20. Two additional sets of requirements warn the driver in case of the thermal event in REESS and low the energy content in REESS.

21. The IWG placed important emphasis on agreeing on specifications for adjustment of State Of Charge (SOC) prior to running test procedures; in particular those involving thermal events, given that the REESS SOC may significantly influence REESS reaction to specified test requirements.

22. Each Contracting Party under the UN 1998 Agreement may maintain its existing national crash tests (e.g. frontal, side, rear, or rollover) and shall comply with GTR post-crash performance requirements.

23. Vehicle post-crash requirements focus at preventing hazard to occupants and ensuring safe state of the REESS after a crash. The provisions include protection from electric shock that can be accomplished by meeting one of the following options: low electrical energy, low voltage, physical protection or isolation resistance.

24. Post-crash requirements regarding the safety of REESS at the vehicle level address the issues of electrolyte leakage, fire hazard and REESS retention requiring REESS to remain attached to the vehicle by at least one component and REESS outside passenger compartment shall not enter passenger compartment. At the moment, venting is not proposed as a requirement for tests addressing safety of REESS post-crash. Mechanical shock and mechanical integrity are the two tests assessing post-crash performance of REESS at the component level.

25. Importantly, GTR introduces safety requirements for heavy duty vehicles that cover general electrical safety for vehicle, vehicle specific functional safety, REESS safety in-use and inertial load on REESS. For most part, the tests and requirements for heavy vehicles are the same as for passenger vehicles.

26. Finally, while the objective of the IWG was to develop EVS UN GTR as robust as possible, work on thermal propagation and initiation methods remains in progress and should be completed in Phase 2. Other technical items that may be addressed in Phase 2 include REESS water immersion test, longer duration fire resistance test, REESS rotation test and vibration profile, detecting flammability, toxicity and corrosiveness of vented gas, post-crash REESS safety assessment and stabilization procedures, safety requirements for low mass and low speed electric vehicles and protection during AC and DC charging.

Annex III

Draft amendments to UN Regulation No. 14 (Safety-belt anchorages)

Amendments adopted on the basis of GRSP-61-01 (see para. 14 of this report)

Paragraph 5.3.1., amend to read:

"5.3.1. Any vehicle … this regulation.

If vehicles of categories M_2 or M_3 which belong to Classes I or A [1] are fitted with safety-belt anchorages, these anchorages shall satisfy the requirements of this Regulation."

Insert new paragraph 5.3.5.4., to read:

"**5.3.5.4. Paragraphs 5.3.5.1. to 5.3.5.3. shall not apply to a driver's seat.**"

Annex IV

Draft amendments to Regulation No. 17 (Strength of seats)

Amendments adopted to ECE/TRANS/WP.29/GRSP/2017/12 (see para. 20 to this report)

Paragraph 5.2.7., amend to read:

"**5.2.7.** **After the tests, the displacement systems intended for permitting or facilitating the access of occupants shall be in working order; they shall be capable, at least once, of being unlocked and shall permit the displacement of the seat or the part of the seat for which they are intended.**

Any other displacement systems, as well as adjustment systems and their locking systems are not required to be in working order.

In the case of seats provided with head restraints, the strength of the seat-back and of its locking devices is deemed to meet the requirements set out in paragraph 6.2. when, after testing in accordance with paragraph 6.4.3.6 below., no breakage of the seat or seat-back has occurred: otherwise, it shall be shown that the seat is capable of meeting the test requirements set out in paragraph 6.2. below.

In the case of seats (benches) with more places to sit than head restraints and in case the manufacturer chooses not to apply 53 daNm during the test of paragraph 6.4., the seat back strength test of para. 6.2. has to be performed in addition to the test of para. 6.4."

Paragraphs 6.4.3.2. and 6.4.3.3., amend to read:

"6.4.3.2. The displaced … of 37.3 daNm about the R point**. In the case of simultaneous testing of bench seats, the rear ward moment shall be applied to all seating positions of the bench simultaneously, irrespective of this position being equipped with or without head restraint.**

6.4.3.3. By means of … paragraph 6.4.3.2. above. **In the case of simultaneous testing of bench seats, the force shall be applied to all head restraints as present on the bench seats simultaneously.**"

Paragraphs 6.4.3.6., amend to read:

"6.4.3.6. To check … occurs earlier. **At the request of the manufacturer the load of paragraph 6.4.3.2. is increased simultaneously to 53 daNm for seating positions without head restraints only to allow simultaneous compliance with paragraphs 5.15. and 6.2.**"

Amendments adopted on the basis of GRSP-61-10 (see para. 21 of this report)

Paragraph 5.2.3.2., amend to read:

"5.2.3.2. The requirements of paragraph **5.2.3.** shall not apply to ..."

Annex V

Draft amendments to Regulation No. 44 (Child Restraint Systems)

Amendments adopted to ECE/TRANS/WP.29/GRSP/2017/13 (see para. 29 to this report)

"6.1.8. **Integral c**hild restraint systems … of the adult safety-belt. This point shall **not be less than 150 mm** from the Cr axis when measured with the child restraint on the dynamic test bench installed in accordance with Annex 21 to this Regulation without a dummy.

Non-integral child restraint systems of the "universal" category, shall have a main load-bearing contact point, between the child restraint and the webbing of the adult safety-belt. This point shall not be less than 65 mm vertically above the test bench cushion and not be less than 150 mm from the Cr axis when measured with the child restraint on the dynamic test bench installed in accordance with Annex 21 to this Regulation without a dummy.

Additional alternative … the requirements **of the Regulation**. "

Paragraph 6.2.2., amend to read:

"6.2.2. **All** restraint devices … to excessive stresses.

In the case of booster cushions and booster seats , the lap portion of the adult seat belt shall be positively guided on both sides to ensure that the loads which are transmitted by the adult lap belt are transmitted through the pelvis. The positive guidance of loads over the pelvis shall be realised from the moment that the child is installed; the lap belt shall pass over the top of the thigh, just touching the fold with the pelvis. The angles α and β between the tangent line in which the belt touches the thighs and the horizontal shall be greater than 10°.

Figures of Strapped child

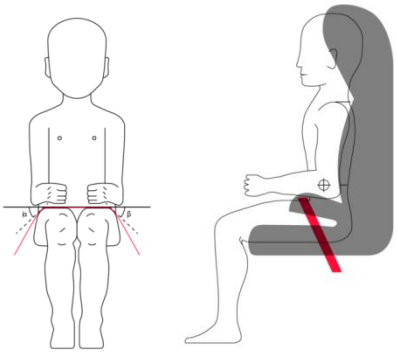

"

Paragraph 7.2.1.1., amend to read:

"7.2.1.1. The buckle…"

Annex 13, Figures 1B and 1C, not amended

Annex VI

Draft amendments to Regulation No. 129 (Enhanced Child Restraint Systems)

Amendments adopted on the basis of GRSP-61-27 (see para. 34 of this report)

Paragraph 2.3, amend to read:

"2.3. "*i-Size*" … **or [XX]** and 16."

Paragraph 2.5., amend to read:

"2.5. "*ISOFIX*" … **or Regulation No. [XX]**."

Paragraph 2.7., amends to read:

2.7. "*Specific vehicle ISOFIX*"…**or Regulation No. [XX]**. It is also an indication...

Paragraph 2.11., amend to read:

"2.11. "*ISOFIX anchorage system*"…**or Regulation No. [XX]** which is designed …"

Paragraph 2.12., amend to read:

"2.12. "*Anti-rotation device*" … **or Regulation No. [XX]**."

Paragraphs 2.13. to 2.13.3., amend to read:

"2.13. "*ISOFIX top tether strap*" …

2.13.1. "*ISOFIX top tether anchorage*" … **or Regulation No. [XX]**, such as a bar,...

2.13.2. …

2.13.3. "*ISOFIX top tether hook*" … **or Regulation No. [XX]**."

Paragraph 2.15.3., amend to read:

"2.15.3. "*Support-leg foot assessment volume*" … **or Regulation No. [XX], Annex 5**."

Paragraph 2.16., amend to read:

"2.16. "*CRF pitch angle*"… **or Regulation No. [XX] (Annex 3, Appendix 2**), with the fixture installed in the vehicle as defined in Regulation No. 16 (Annex 17, Appendix 2)."

Amendments adopted to ECE/TRANS/WP.29/GRSP/2017/11 (see para. 34 to this report)

Paragraph 2.51.1., amend to read:

"2.51.1. *"ISOFIX position"* means a location as **defined in** Regulation No. 14 or Regulation No. [XX]."

Amendments adopted to ECE/TRANS/WP.29/GRSP/2017/15 (see para. 35 to this report)

Insert new paragraph 4.9., to read:

"4.9. An impact shield that is not permanently attached to the seat shall have a permanently attached label to indicate the brand and model of the **Enhanced Child Restraint System** to which it belongs and the size range. The minimum size of the label shall be 40 x 40 mm **or the equivalent area.**"

Insert new paragraph 4.10., to read:

"4.10. Enhanced ...

The label shall be visible to the person installing the **Enhanced** Child **R**estraint **System** in a vehicle **and when a child is seated in the restraint. The label shall have** a minimum size of 40 x 60 mm **or the equivalent area and** shall feature a pictogram of each restraint configuration adjacent to the stature range."

…

Paragraph 6.3.2.1., amend to read:

"6.3.2.1. Internal geometric characteristics

…

Integral Enhanced Child Restraint Systems that feature an impact shield shall **also** be capable of being adjusted to fulfil:

…

(b) The 95th percentile upper leg thickness and 95th percentile abdomen depth, simultaneously to the 95th percentile shoulder **height, shoulder** breadth, hip breadth and sitting height.

…"

…

Paragraph 6.6.4.4.1.1.1., amend to read:

"6.6.4.4.1.1.1. Where a test is conducted in accordance with paragraph 6.6.4.1.6.2. or paragraph 6.6.4.1.8.2 above, a tolerance of +10 per cent shall be applicable to the head excursion value distance between Cr point and plane AB."

Paragraph 6.6.4.4.1.2.1, amend to read:

"6.6.4.4.1.2.1. Head excursion: no part of the head of the dummy shall pass beyond the planes FD, FG and DE, as shown in Figure 2 below. This shall be judged up to 300 ms or the moment that the dummy has come to a definitive standstill whatever occurs first.

Except when testing using Q6 dummy where:

The value in relation to the FD plane is 840 mm.

Where a test is conducted with paragraph 6.6.4.1.6.2. or paragraph 6.6.4.1.8.2. above, only the second configuration test results without 100 mm diameter bar will be considered.

Figure 2

Arrangement for testing a rearward-facing device, not supported by the dashboard

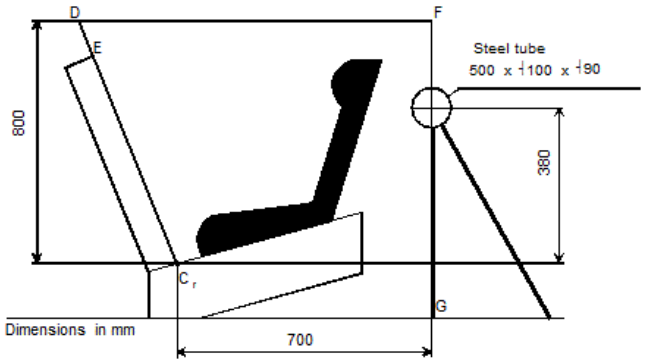

"

…

Paragraph 6.7.2.7., amend to read:

"6.7.2.7. …

An adjuster … cycles **as specified in paragraph 7.2.6.2.** "

Insert new paragraph 7.1.3.6.5., to read:

"7.1.3.6.5. The test specified in paragraph 6.6.4.1.8. above is a requirement only for:

7.1.3.6.5.1. The smallest dummy for which the Enhanced Child Restraint is designed, if the means of restraint is an impact shield.

7.1.3.6.5.2. The largest dummy for which the Enhanced Child Restraint is designed, if the means of restraint is a harness."

Insert new paragraph 7.2.6., to read:

"7.2.6. Conditioning tests for adjusters"

Paragraph 7.2.6., renumber as paragraph 7.2.6.1. and amend to read:

"7.2.6.1. Conditioning test for adjusters mounted directly on a child restraint"

Insert new paragraph 7.2.6.2., to read:

"7.2.6.2. Conditioning test for adjusters connected to a strap (not directly mounted to the Enhanced Child Restraint System)

Install the largest dummy for which the restraint is intended, as if for the dynamic test, including the standard slack as specified in paragraph 7.1.3.5. above. Mark a reference line on the strap where the free end of the strap enters the adjuster.

Remove the dummy and place the restraint in the conditioning rig shown in Figure 2, Annex 15.

The strap shall be cycled for a total distance of not less than 150 mm through the adjuster. This movement shall be such that at least 100 mm of strap on the side of the reference line towards the free end of the strap.

If the length of strap from the reference line to the free end of the strap is insufficient for the movement described above, the 150 mm of movement through the adjuster shall be from the fully extended strap position.

The frequency of cycling shall be 10 ± 1 cycles/minute, with a velocity on 'B' of 150 ± 1 mm/s.

This process shall be conducted for each adjuster that is part of the retention system of the child within the restraint."

Paragraph 9.2.1.1., amend to read:

"**9.2.1.1.** **Five Enhanced Child Restraint Systems shall be subjected to the dynamic test described in paragraph 7.1.3. above. The Technical Service that conducted the type approval tests shall choose the conditions that produced the maximum horizontal head excursion during the type approval dynamic tests, excluding the conditions described in paragraphs 6.6.4.1.6.2. and 6.6.4.1.8.2. above. All the five Enhanced Child Restraint Systems shall be tested under the same conditions.**"

…

Annex 14, amend to read:

"1. Head …

…

1.2. Definition of impact shield head impact area

The impact shield head impact area is the whole upper surface of the impact shield, **which comprises any surfaces visible from the top, looking down on the shield.**"

Annex 15, amend to read:

"Description of conditioning for adjusters connected to a strap

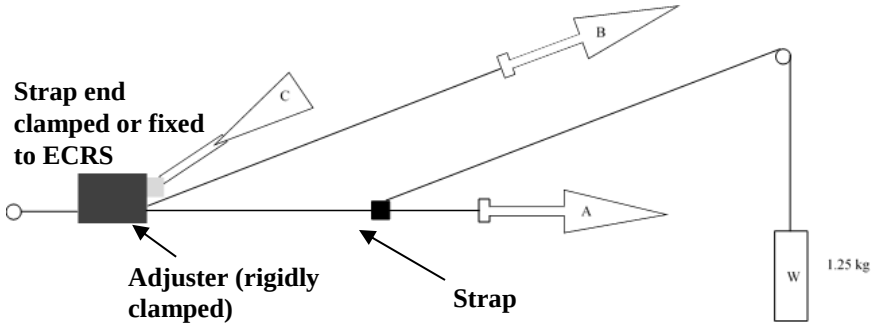

1. Method

1.1. Rigidly clamp the adjuster

1.2. With the strap set at the reference position described in paragraph 7.2.6., withdraw at least 50 mm of strap from the adjuster by pulling on the free end of the strap.

1.3. Attach the adjuster part of the strap to the pulling device A.

1.4. **Activate the adjuster (C) and pull at least 150 mm of strap through the adjuster. This represents half of one cycle and puts pulling device A to the maximum strap extraction position.**

1.5. **Connect the free end of the strap to pulling device B.**

2. **The cycle is:**

2.1. **Pull B at least 150 mm while A does not exert tension on the strap.**

2.2. **Activate the adjuster (C) and pull A while B does not exert tension on the free end of the strap.**

2.3. **At the end of the stroke, de-activate the adjuster.**

2.4. **Repeat the cycle as specified in paragraph 6.7.2.7. of this Regulation.**"

Annex 18, amend to read:

…

Table 1

Applicable to all ECRS						*Additional internal dimensions for ECRS with impact shield systems*			
	Min	Min	Min	Min	Max	Min	Max	**Min**	**Max**
Stature	Sitting height cm	Shoulder breadth cm	Hip breadth cm	Shoulder height cm	Shoulder height cm	Abdomen depth cm	Abdomen depth cm	Upper leg thickness cm	Upper leg thickness cm
A	B	C	D	E1	E2	F1	F2	G1	G2
	95%ile	95%ile	95%ile	5%ile	95%ile	5%ile	95%ile	5%ile	95%ile
≤40				**< 27.4**					
45	39.0	12.1	14.2	27.4	29.0				
50	40.5	14.1	14.8	27.6	29.2				
55	42.0	16.1	15.4	27.8	29.4				
60	43.5	18.1	16.0	28.0	29.6				
65	45.0	20.1	17.2	28.2	29.8	**Not allowed for these dimensions and stature bellow 76 cm**			
70	47.1	22.1	18.4	28.3	30.0				
75	49.2	24.1	19.6	28.4	31.3	12.5	15.1	5.7	8.4
80	51.3	26.1	20.8	29.2	32.6	12.7	15.7	5.8	8.4
85	53.4	26.9	22.0	30.0	33.9	12.9	16.2	5.9	8.5
90	55.5	27.7	22.5	30.8	35.2	13.1	16.8	6.2	8.5
95	57.6	28.5	23.0	31.6	36.5	13.3	17.8	6.5	8.9
100	59.7	29.3	23.5	32.4	37.8	13.5	18.2	6.5	9.6
105	61.8	30.1	24.9	33.2	39.1	13.6	18.8	6.6	10.3
110	63.9	30.9	26.3	34.0	40.4	13.9	19.6	6.6	10.3
115	66.0	32.1	27.7	35.5	41.7	13.9	19.9	6.6	10.4
120	68.1	33.3	29.1	37.0	43.0	14.3	20.2	6.8	10.5
125	70.2	33.3	29.1	38.5	44.3	14.7	20.7	7.5	10.9
130	72.3	33.3	29.1	40.0	46.1	**Not allowed for these dimensions and**			

135	74.4	33.3	29.1	41.5	47.9	**stature over 125 cm**
140	76.5	34.2	29.6	43.0	49.7	
145	78.6	35.3	30.8	44.5	51.5	
150	81.1	36.4	32.0	46.3	53.3	

All lateral dimensions are measured under a contact force of 50 N with the devices described in Figure 2 **and Figure 3** of this annex and the following tolerances will applied:

Minimum Sitting height:

(i) up to 87 cm B - 5 per cent

(ii) From stature from 87 cm and up to 150 cm B - 10 per cent,

Minimum shoulder height (5 percentile): E1 $_{-2}^{+0}$ cm

Maximum shoulder height (95 percentile): E2 $_{-0}^{+2}$ cm

The mass of the devices described in Figure 2 **and Figure 3** of this annex shall be 10 kg +/- 1 kg

Figure 2
ECRS Measurement Device - Side and Front View of the measuring device

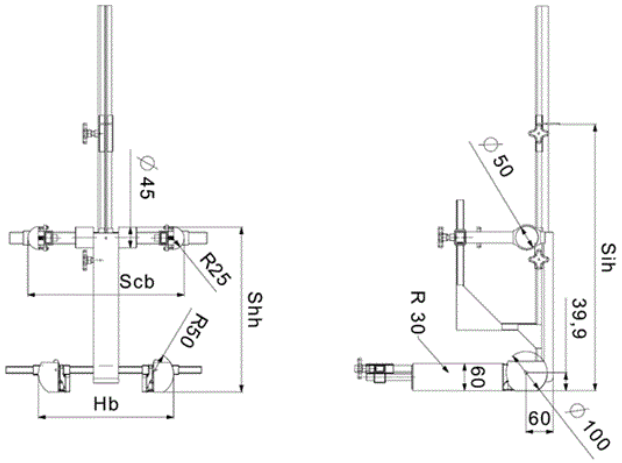

All dimensions in mm

Figure 3
Side and Front View of the measuring device for measurements applicable to Enhanced Child Restraint Systems that feature an impact shield

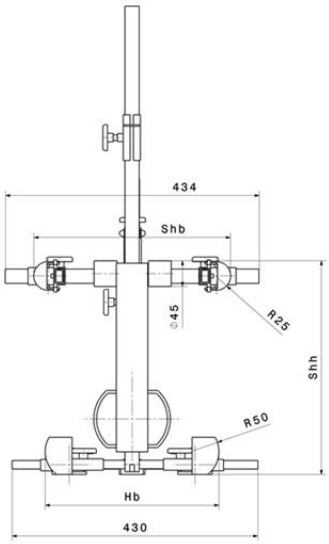

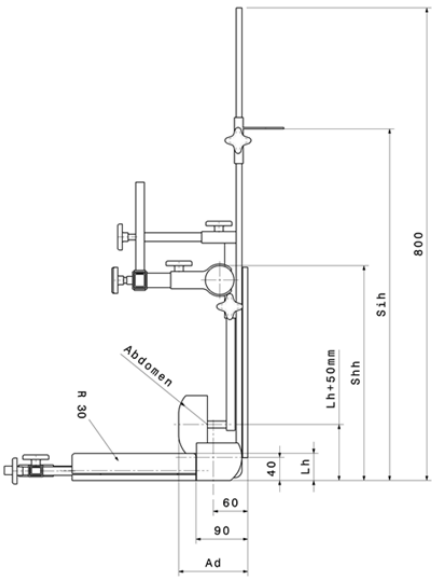

All dimensions in mm

Internal geometry assessment method

This method describes how to conduct the internal geometry assessment, as required by paragraph 6.3.2.1., to verify the stature range of the ECRS declared by the manufacturer.

This assessment shall be carried out for each of the following:

(a) For each ECRS orientation (e.g. rearward and forward facing)

(b) For each ECRS type (e.g. integral and non-integral)

(c) For any removable insert (e.g. for use as described by manufacturer's instructions)

(d) For each occupant restraint method (e.g. harness and shield)

The internal geometry assessment should be conducted with the ECRS placed on a flat surface or connected to a base in the case of ECRS modules.

For integral or non-integral ECRS the device shown in Annex 18, Figure 2 shall be used.

For ECRS with an impact shield the device shown in Annex 18, Figure 3 shall be used.

1. Determining the Minimum Occupant size

The ECRS should be adjusted to fit the smallest occupant (i.e. headrest height, harness height adjustment, appropriate insert, internal padding, impact shield position), while still fitting within the required ISO volumetric envelope as defined in paragraph 6.3.2.2. of this Regulation.

The measurement device shall then be placed in the ECRS. The device shall be aligned centrally to the ECRS.

All measurements shall be taken with the device base in contact with the seat pan of the ECRS and the device backrest in contact with the backrest of the ECRS.

The measurements shall be taken in the following order:

1.1. Minimum Shoulder Height (E1)

1.1.1. For integral ECRS:

This measurement shall be taken when the top of the shoulder height cylinders of the device are aligned with the lowest harness slot position. For this alignment, the top of the shoulder cylinder shall be aligned perpendicular to the harness webbing outlet in the ECRS backrest.

A tolerance may be subtracted from this measurement to allow the shoulders of the occupant to be lower than the harness shoulder slots.

Either:

(a) If the ECRS instruction manual provided by the manufacturer quantifies the distance that the child's shoulder may be below the harness slots, then this distance shall be subtracted from the minimum shoulder height measurement.

(b) If no distance is specified, a 2 cm tolerance may be subtracted from the minimum shoulder height measurement.

1.1.2. For non-integral ECRS

This measurement shall be taken when the top of the shoulder height cylinders of the device are aligned without interference with the lowest part of the headrest.

1.1.3. For ECRS with an impact shield:

This measurement shall be taken when the top of the shoulder height cylinders of the device are aligned without interference with the lowest part of the headrest.

1.2. Minimum Upper Leg Thickness (G1)

This requirement only applies to ECRS with impact shields.

While maintaining the minimum shoulder height position (E1), the minimum leg measurement shall be measured when the device is adjusted so that the simulated thighs contact the bottom of the impact shield.

1.3. Minimum Abdomen Depth (F1)

This requirement only applies to ECRS with impact shields

This measurement shall be taken whilst maintaining the minimum leg thickness measurement position (G1) and minimum shoulder height position (E1).

The bottom of the simulated abdomen of the device shall be aligned with the top of the simulated thighs.

The abdomen depth shall be measured when the simulated abdomen contacts the shield.

2. Determining the Maximum Occupant Size

Integral ECRS shall be adjusted to fit the largest occupant (i.e. headrest height, harness height adjustment, impact shield position), while still fitting within the required ISO volumetric envelope as defined in paragraph 6.3.2.2.1.

Non-integral ECRS shall be adjusted to accommodate children of 135 cm stature or to the largest size of its declared stature range if the upper limit is below 135 cm (i.e. headrest), while still within the required ISO volumetric envelope as defined in paragraph 6.3.2.2.2.

The measurement device shall then be placed in the ECRS. The device shall be aligned centrally to the ECRS.

The measurements shall then be taken in the following order:

2.1. Sitting Height (B)

This measurement shall be taken to the highest part of the ECRS that is the effective headrest (head pad or backrest).

A tolerance is added to this measurement to allow part of the head to protrude from the ECRS:

(a) +5 per cent for stature ranges below 87 cm

(b) +10 per cent for statures ranges above 87 cm

2.2. Hip Breadth (D)

The hip breadth measurement shall be taken while maintaining the sitting height measurement (B).

The hip breadth measurement shall be taken while asserting a 50 N contact force on the ECRS.

If 50 N force cannot be achieved, because the ECRS restricts the space at the simulated thighs then the measurement should be taken at the point the simulated thighs contact the ECRS. There shall be no lateral deformation of the ECRS caused by the measuring device.

2.3. Maximum Shoulder Height (E2)

The maximum shoulder height measurement shall be taken while maintaining the sitting height (B) and hip breadth (D) measurements.

2.3.1. For integral ECRS

This measurement shall be taken when the top of the shoulder height cylinders of the device are aligned with the highest harness slot position still fitting within the required ISO volumetric envelope. For this alignment, the top of the shoulder cylinder shall be aligned perpendicular to the harness webbing outlet in the ECRS backrest.

A tolerance may be added to this measurement to allow the shoulders of the occupant to be higher than the harness shoulder slots. However, if there is a physical restriction due to the design of the ECRS (e.g. the headrest) that would prevent a child with taller shoulders fitting the tolerance should not be added.

If there is no possible interference then the following tolerances may be added:

(a) If the ECRS instruction manual provided by the manufacturer quantifies the distance the child's shoulder may be above the harness slots, then this distance shall be added to the maximum shoulder height measurement.

(b) If no distance is specified a 2 cm tolerance may be added to the maximum shoulder height measurement.

2.3.2. For non-integral ECRS

This measurement shall be taken when the top of the shoulder height cylinders of the device are aligned without interference with the lowest point of the headrest, this includes any belt routing guide.

No tolerance shall be added to this measurement.

2.3.3. For ECRS with an impact shield

This measurement shall be taken when the top of the shoulder height cylinders of the device are aligned without interference with the lowest point of the headrest, this includes any belt routing guide.

No tolerance shall be added to this measurement.

2.4. Maximum Upper Leg Thickness (G2)

This requirement only applies to ECRS with impact shields.

This measurement shall be taken while maintaining the sitting height (B), hip breadth (D) and maximum shoulder height (E2) measurements.

The maximum upper leg thickness measurement shall be measured when the device is adjusted so that the simulated thighs contact the bottom of the impact shield.

2.5. Maximum Abdomen Depth (F2)

This requirement only applies to ECRS with impact shields.

This measurement shall be taken while maintaining the maximum upper leg thickness (G2), maximum shoulder height (E2), hip breadth (D) and sitting height (B) measurement positions.

The bottom of the simulated abdomen of the device shall be aligned with the top of the simulated thighs.

The abdomen depth shall be measured when the simulated abdomen contacts the shield.

2.6. Shoulder Breadth (C)

The shoulder breadth measurement shall be taken while maintaining the sitting height (B) and hip breadth (D) measurements.

The width of the ECRS at the maximum shoulder height measurement position shall be measured while asserting a 50 N contact force on the ECRS.

If there is no side wing structure to the ECRS at the maximum shoulder height (E2), the shoulder breadth measurement shall be taken at a height, which is the closest proximity to the maximum shoulder height, with side wing structure.

If the width of the ECRS between the minimum and maximum shoulder height measurements is not a consistent width, i.e. significantly narrower at any point between the E1 and E2 measurements, then an intermediate shoulder breadth measurements shall be taken."

Amendments adopted to ECE/TRANS/WP.29/GRSP/2017/16 (see para. 35 to this report)

Insert new paragraph 4.9., to read:

"4.9. An impact shield that is not permanently attached to the seat shall have a permanently attached label to indicate the brand and model of the **Enhanced Child Restraint System** to which it belongs and the size range. The minimum size of the label shall be 40 x 40 mm **or the equivalent area.**"

Insert new paragraph 4.10., to read:

"4.10. Enhanced ...

The label shall be visible to the person installing the **Enhanced** Child **R**estraint **System** in a vehicle **and when a child is seated in the restraint. The label shall have** a minimum size of 40 x 60 mm **or the equivalent area and** shall feature a pictogram of each restraint configuration adjacent to the stature range."

…

Paragraph 6.3.2.1., amend to read:

"6.3.2.1. Internal geometric characteristics

…

Integral Enhanced Child Restraint Systems that feature an impact shield shall **also** be capable of being adjusted to fulfil:

…

(b) The 95th percentile upper leg thickness and 95th percentile abdomen depth, simultaneously to the 95th percentile shoulder **height, shoulder** breadth, hip breadth and sitting height.

…"

…

Paragraph 6.6.4.4.1.1.1., amend to read:

"**6.6.4.4.1.1.1. Where a test is conducted in accordance with paragraph 6.6.4.1.6.2. or paragraph 6.6.4.1.8.2 above, a tolerance of +10 per cent shall be applicable to the head excursion value distance between Cr point and plane AB.**"

Paragraph 6.6.4.4.1.2.1, amend to read:

"**6.6.4.4.1.2.1. Head excursion: no part of the head of the dummy shall pass beyond the planes FD, FG and DE, as shown in Figure 2 below. This shall be judged up to 300 ms or the moment that the dummy has come to a definitive standstill whatever occurs first.**

Except when testing using Q6 dummy where:

The value in relation to the FD plane is 840 mm

Where a test is conducted with paragraph 6.6.4.1.6.2. or paragraph 6.6.4.1.8.2. above, only the second configuration test results without 100 mm diameter bar will be considered.

Figure 2
Arrangement for testing a rearward-facing device, not supported by the dashboard

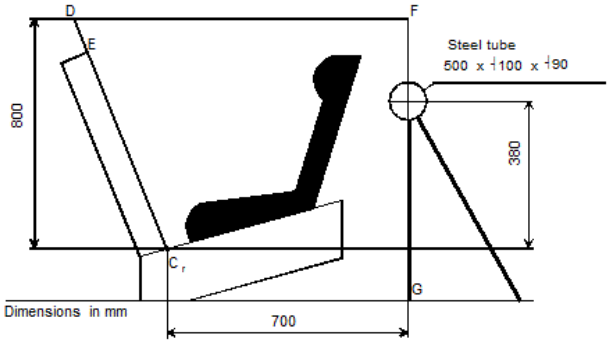

"

…

Insert new paragraph 7.1.3.6.5., to read:

"**7.1.3.6.5. The test specified in 6.6.4.1.8. above is a requirement only for:**

7.1.3.6.5.1. The smallest dummy for which the Enhanced Child Restraint is designed, if the means of restraint is an impact shield.

7.1.3.6.5.2. The largest dummy for which the Enhanced Child Restraint is designed, if the means of restraint is a harness."

Paragraph 7.2.6., renumber as paragraph 7.2.6.1. and amend to read:

"**7.2.6.1. Conditioning test for adjusters mounted directly on a child restraint**"

Insert new paragraph 7.2.6.2., to read:

"**7.2.6.2. Conditioning test for adjusters connected to a strap (not directly mounted to the Enhanced Child Restraint System)**

Install the largest dummy for which the restraint is intended, as if for the dynamic test, including the standard slack as specified in paragraph 7.1.3.5. above. Mark a reference line on the strap where the free end of the strap enters the adjuster.

Remove the dummy and place the restraint in the conditioning rig shown in Figure 2, Annex 15.

The strap shall be cycled for a total distance of not less than 150 mm through the adjuster. This movement shall be such that at least 100 mm of strap on the side of the reference line towards the free end of the strap.

If the length of strap from the reference line to the free end of the strap is insufficient for the movement described above, the 150 mm of

movement through the adjuster shall be from the fully extended strap position.

The frequency of cycling shall be 10 ± 1 cycles/minute, with a velocity on 'B' of 150 ± 1 mm/s.

This process shall be conducted for each adjuster that is part of the retention system of the child within the restraint."

Paragraph 9.2.1.1., amend to read:

"**9.2.1.1.** **Five Enhanced Child Restraint Systems shall be subjected to the dynamic test described in paragraph 7.1.3. above. The Technical Service that conducted the type approval tests shall choose the conditions that produced the maximum horizontal head excursion during the type approval dynamic tests, excluding the conditions described in paragraph 6.6.4.1.6.2. and paragraph 6.6.4.1.8.2. above. All the five Enhanced Child Restraint Systems shall be tested under the same conditions.**"

…

Annex 14, amend to read:

"1. Head …

…

1.2. Definition of impact shield head impact area

The impact shield head impact area is the whole upper surface of the impact shield, **which comprises any surfaces visible from the top, looking down on the shield.**"

Annex 15, amend to read:

"Description of conditioning for adjusters connected to a strap

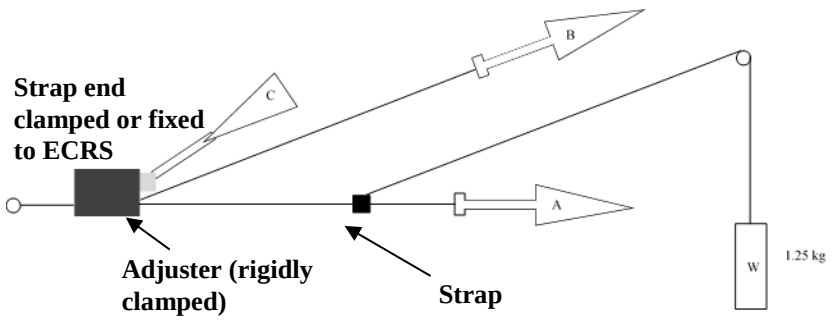

1. Method

1.1. Rigidly clamp the adjuster

1.2. With the strap set at the reference position described in paragraph 7.2.6., withdraw at least 50 mm of strap from the adjuster by pulling on the free end of the strap.

1.3. Attach the adjuster part of the strap to the pulling device A.

1.4. Activate the adjuster (C) and pull at least 150 mm of strap through the adjuster. This represents half of one cycle and puts pulling device A to the maximum strap extraction position.

1.5. Connect the free end of the strap to pulling device B.

2. **The cycle is:**

2.1. **Pull B at least 150 mm while A does not exert tension on the strap.**

2.2. **Activate the adjuster (C) and pull A while B does not exert tension on the free end of the strap.**

2.3. **At the end of the stroke, de-activate the adjuster.**

2.4. **Repeat the cycle as specified in paragraph 6.7.2.7. of this Regulation.**"

Annex 18, amend to read:

"…

Table 1

Applicable to all ECRS						*Additional internal dimensions for ECRS with impact shield systems*			
	Min	Min	Min	Min	Max	Min	Max	**Min**	**Max**
Stature	Sitting height cm	Shoulder breadth cm	Hip breadth cm	Shoulder height cm	Shoulder height cm	Abdomen depth cm	Abdomen depth cm	Upper leg thickness cm	Upper leg thickness cm
A	B	C	D	E1	E2	F1	F2	G1	G2
	95%ile	95%ile	95%ile	5%ile	95%ile	5%ile	95%ile	5%ile	95%ile
≤40				**< 27.4**					
45	39.0	12.1	14.2	27.4	29.0				
50	40.5	14.1	14.8	27.6	29.2				
55	42.0	16.1	15.4	27.8	29.4				
60	43.5	18.1	16.0	28.0	29.6				
65	45.0	20.1	17.2	28.2	29.8	**Not allowed for these dimensions and stature bellow 76 cm**			
70	47.1	22.1	18.4	28.3	30.0				
75	49.2	24.1	19.6	28.4	31.3	12.5	15.1	5.7	8.4
80	51.3	26.1	20.8	29.2	32.6	12.7	15.7	5.8	8.4
85	53.4	26.9	22.0	30.0	33.9	12.9	16.2	5.9	8.5
90	55.5	27.7	22.5	30.8	35.2	13.1	16.8	6.2	8.5
95	57.6	28.5	23.0	31.6	36.5	13.3	17.8	6.5	8.9
100	59.7	29.3	23.5	32.4	37.8	13.5	18.2	6.5	9.6
105	61.8	30.1	24.9	33.2	39.1	13.6	18.8	6.6	10.3
110	63.9	30.9	26.3	34.0	40.4	13.9	19.6	6.6	10.3
115	66.0	32.1	27.7	35.5	41.7	13.9	19.9	6.6	10.4
120	68.1	33.3	29.1	37.0	43.0	14.3	20.2	6.8	10.5
125	70.2	33.3	29.1	38.5	44.3	14.7	20.7	7.5	10.9
130	72.3	33.3	29.1	40.0	46.1				
135	74.4	33.3	29.1	41.5	47.9				
140	76.5	34.2	29.6	43.0	49.7				
145	78.6	35.3	30.8	44.5	51.5	**Not allowed for these dimensions and stature over 125 cm**			
150	81.1	36.4	32.0	46.3	53.3				

All lateral dimensions are measured under a contact force of 50 N with the devices described in Figure 2 **and Figure 3** of this annex and the following tolerances will applied:

Minimum Sitting height:

- up to 87 cm B - 5 per cent

- From stature from 87 cm and up to 150 cm B - 10 per cent,

Minimum shoulder height (5 percentile): E1 $_{-2}^{+0}$ cm

Maximum shoulder height (95 percentile): E2 $_{-0}^{+2}$ cm

The mass of the devices described in Figure 2 **and Figure 3** of this annex shall be 10 kg +/- 1 kg

Figure 2
ECRS Measurement Device - Side and Front View of the measuring device

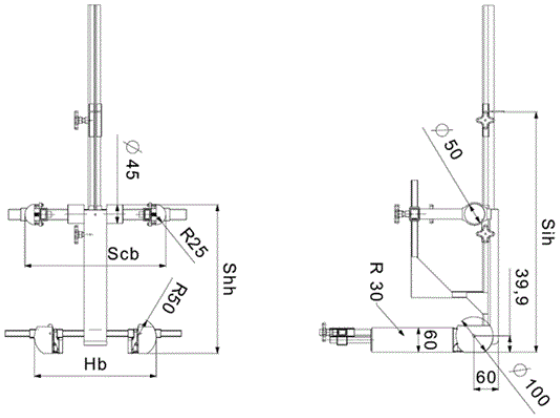

All dimensions in mm

Figure 3
Side and Front View of the measuring device for measurements applicable to Enhanced Child Restraint Systems that feature an impact shield

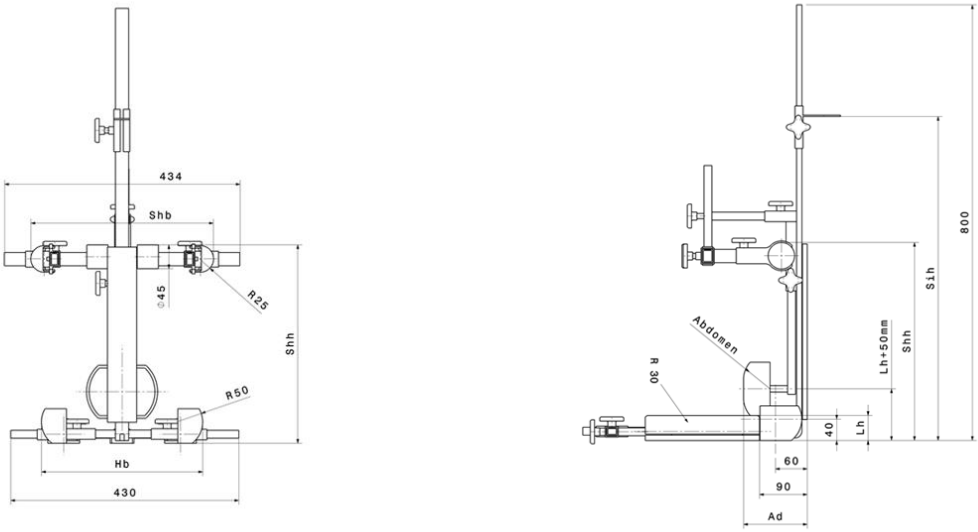

All dimensions in mm

Internal geometry assessment method

This method describes how to conduct the internal geometry assessment, as required by paragraph 6.3.2.1., to verify the stature range of the ECRS declared by the manufacturer.

This assessment shall be carried out for each of the following:

(a) For each ECRS orientation (e.g. rearward and forward facing);

(b) For each ECRS type (e.g. integral and non-integral);

(c) For any removable insert (e.g. for use as described by manufacturer's instructions);

(d) For each occupant restraint method (e.g. harness and shield).

The internal geometry assessment should be conducted with the ECRS placed on a flat surface or connected to a base in the case of ECRS modules.

For integral or non-integral ECRS the device shown in Annex 18, Figure 2 shall be used.

For ECRS with an impact shield the device shown in Annex 18, Figure 3 shall be used.

1. Determining the Minimum Occupant size

The ECRS should be adjusted to fit the smallest occupant (i.e. headrest height, harness height adjustment, appropriate insert, internal padding, impact shield position), while still fitting within the required ISO volumetric envelope as defined in paragraph 6.3.2.2.

The measurement device shall then be placed in the ECRS. The device shall be aligned centrally to the ECRS.

All measurements shall be taken with the device base in contact with the seat pan of the ECRS and the device backrest in contact with the backrest of the ECRS.

The measurements shall be taken in the following order:

1.1. Minimum Shoulder Height (E1)

1.1.1. For integral ECRS:

This measurement shall be taken when the top of the shoulder height cylinders of the device are aligned with the lowest harness slot position. For this alignment, the top of the shoulder cylinder shall be aligned perpendicular to the harness webbing outlet in the ECRS backrest.

A tolerance may be subtracted from this measurement to allow the shoulders of the occupant to be lower than the harness shoulder slots.

Either:

(a) If the ECRS instruction manual provided by the manufacturer quantifies the distance the child's shoulder may be below the harness slots, then this distance shall be subtracted from the minimum shoulder height measurement.

(b) If no distance is specified a 2 cm tolerance may be subtracted from the minimum shoulder height measurement.

1.1.2. For non-integral ECRS

This measurement shall be taken when the top of the shoulder height cylinders of the device are aligned without interference with the lowest part of the headrest.

1.1.3. For ECRS with an impact shield:

This measurement shall be taken when the top of the shoulder height cylinders of the device are aligned without interference with the lowest part of the headrest.

1.2. Minimum Upper Leg Thickness (G1)

This requirement only applies to ECRS with impact shields.

Whilst maintaining the minimum shoulder height position (E1), the minimum leg measurement shall be measured when the device is adjusted so that the simulated thighs contact the bottom of the impact shield.

1.3. Minimum Abdomen Depth (F1)

This requirement only applies to ECRS with impact shields

This measurement shall be taken whilst maintaining the minimum leg thickness measurement position (G1) and minimum shoulder height position (E1).

The bottom of the simulated abdomen of the device shall be aligned with the top of the simulated thighs.

The abdomen depth shall be measured when the simulated abdomen contacts the shield.

2. Determining the Maximum Occupant Size

Integral ECRS shall be adjusted to fit the largest occupant (i.e. headrest height, harness height adjustment, impact shield position), while still fitting within the required ISO volumetric envelope as defined in paragraph 6.3.2.2.1.

Non-integral ECRS shall be adjusted to accommodate children of 135 cm stature or to the largest size of its declared stature range if the upper limit is below 135 cm (i.e. headrest), while still fitting within the required ISO volumetric envelope as defined in paragraph 6.3.2.2.2.

The measurement device shall then be placed in the ECRS. The device shall be aligned centrally to the ECRS.

The measurements shall then be taken in the following order:

2.1. Sitting Height (B)

This measurement shall be taken to the highest part of the ECRS that is the effective headrest (head pad or backrest).

A tolerance is added to this measurement to allow part of the head to protrude from the ECRS:

(a) +5 per cent for stature ranges below 87 cm

(b) +10 per cent for statures ranges above 87 cm

2.2. Hip Breadth (D)

The hip breadth measurement shall be taken while maintaining the sitting height measurement (B).

The hip breadth measurement shall be taken while asserting a 50 N contact force on the ECRS.

If 50 N force cannot be achieved, because the ECRS restricts the space at the simulated thighs then the measurement should be taken at the point the simulated thighs contact the ECRS. There shall be no lateral deformation of the ECRS caused by the measuring device.

2.3. Maximum Shoulder Height (E2)

The maximum shoulder height measurement shall be taken while maintaining the sitting height (B) and hip breadth (D) measurements.

2.3.1. For integral ECRS

This measurement shall be taken when the top of the shoulder height cylinders of the device are aligned with the highest harness slot position still fitting within the required ISO volumetric envelope. For this alignment, the top of the shoulder cylinder shall be aligned perpendicular to the harness webbing outlet in the ECRS backrest.

A tolerance may be added to this measurement to allow the shoulders of the occupant to be higher than the harness shoulder slots. However if there is a physical restriction due to the design of the ECRS (e.g. the headrest) that would prevent a child with taller shoulders fitting the tolerance should not be added.

If there is no possible interference then the following tolerances may be added:

(a) If the ECRS instruction manual provided by the manufacturer quantifies the distance the child's shoulder may be above the harness slots, then this distance shall be added to the maximum shoulder height measurement.

(b) If no distance is specified a 2 cm tolerance may be added to the maximum shoulder height measurement.

2.3.2. For non-integral ECRS

This measurement shall be taken when the top of the shoulder height cylinders of the device are aligned without interference with the lowest point of the headrest, this includes any belt routing guide.

No tolerance shall be added to this measurement.

2.3.3. For ECRS with an impact shield

This measurement shall be taken when the top of the shoulder height cylinders of the device are aligned without interference with the lowest point of the headrest, this includes any belt routing guide.

No tolerance shall be added to this measurement.

2.4. Maximum Upper Leg Thickness (G2)

This requirement only applies to ECRS with impact shields.

This measurement shall be taken whilst maintaining the sitting height (B), hip breadth (D) and maximum shoulder height (E2) measurements.

The maximum upper leg thickness measurement shall be measured when the device is adjusted so that the simulated thighs contact the bottom of the impact shield.

2.5. Maximum Abdomen Depth (F2)

This requirement only applies to ECRS with impact shields.

This measurement shall be taken while maintaining the maximum upper leg thickness (G2), maximum shoulder height (E2), hip breadth (D) and sitting height (B) measurement positions.

The bottom of the simulated abdomen of the device shall be aligned with the top of the simulated thighs.

The abdomen depth shall be measured when the simulated abdomen contacts the shield.

2.6. Shoulder Breadth (C)

The shoulder breadth measurement shall be taken while maintaining the sitting height (B) and hip breadth (D) measurements.

The width of the ECRS at the maximum shoulder height measurement position shall be measured while asserting a 50 N contact force on the ECRS.

If there is no side wing structure to the ECRS at the maximum shoulder height (E2), the shoulder breadth measurement shall be taken at a height, which is the closest proximity to the maximum shoulder height, with side wing structure.

If the width of the ECRS between the minimum and maximum shoulder height measurements is not a consistent width, i.e. significantly narrower at any point between the E1 and E2 measurements, then an intermediate shoulder breadth measurements shall be taken."

Annex VII

Draft amendments to the Regulation No. 134 (Hydrogen and Fuel Cells Vehicles (HFCV))

Amendments adopted to ECE/TRANS/WP.29/GRSP/2017/5 (see para. 39 to this report)

…

Paragraphs 9.3.2.1. and 9.3.2.2., amend to read:

"9.3.2.1. Rupture test in batch testing

The test shall be performed according to paragraph 2.1. (hydrostatic pressure rupture test) of Annex 3. The required rupture pressure shall be at least **BPmin and the average burst pressure recorded of the last ten tests shall be at or above BP_O-10 per cent**.

9.3.2.2. Ambient temperature ..."

Annex 3,

Paragraphs 2.1. to 2.2., amend to read:

"2.1. Burst test (hydraulic)

…

2.2. Pressure cycling test (hydraulic)

….

(c) The container is pressure cycled between **2 (±1) MPa** and the target pressure at a rate not exceeding 10 cycles per minute for the specified number of cycles; …"

Annex VIII

Draft amendments to the draft new UN Regulation on ISOFIX anchorage systems, ISOFIX top tether anchorages and i-Size seating positions

Amendments adopted to ECE/TRANS/WP.29/GRSP/2017/7 (see para. 45 to this report)

The title, amend to read:

"Uniform provisions concerning the approval of vehicles with regard to ISOFIX anchorages systems ISOFIX top tether anchorages and i-Size seating positions"

Paragraph 1., amend to read:

1. Scope

This Regulation applies to:

(**a**) Vehicles of category M_1 with regard to their ISOFIX anchorage systems and their ISOFIX top tether anchorages intended for child restraint systems. Other categories of vehicles fitted with ISOFIX anchorages have also to comply with the provisions of this Regulation.

(**b**) Vehicles of any category with regard to their i-Size seating positions, if any are defined by the vehicle manufacturer.

Paragraph 2.2., amend to read:

"2.2. "*Vehicle type*" means a category of power-driven vehicles, which do not differ in such essential respects as the dimensions, lines and materials of components of the vehicle structure or seat structure to **which the ISOFIX** anchorages systems …, having an influence on the forces applying to **the anchorages**."

Paragraph 2.14., amend to read:

"2.14. "*Static force application device (SFAD)*" means … in Figure 3 of Annex **5**."

Paragraph 2.2., amend to read:

"2.22. "*Support leg foot assessment volume*" means the volume, as shown in Figures 1 and 2 of Annex **5** of this Regulation, ..."

Paragraph 3.2.5., amend to read:

"3.1. The application for approval of a vehicle type with **regard,** the …"

Paragraphs 3.2.1. to 3.2.4., amend to read:

3.2.1. Drawings of the general vehicle structure on an appropriate scale, showing the **positions of the** ISOFIX **anchorage systems**, of ISOFIX top tether

anchorages if any and in case of i-Size seating positions, the vehicle floor contact surface and detailed **drawings of** the ISOFIX …;

3.2.2. A specification of the materials used which may affect the **strength of** the ISOFIX …;

3.2.3. A technical **description of** the ISOFIX anchorages systems and ISOFIX top tether anchorages if any;

3.2.4. In the **case of** the ISOFIX anchorages systems and of ISOFIX top tether anchorages if any affixed to the seat structure:

Paragraph 3.2.5., shall be deleted

Paragraph 3.3., amend to read:

"3.3. At the option of .., and in case of i-Size seating positions, the vehicle floor contact surface **test, shall** be submitted to the technical service."

Paragraph 4.2., amend to read:

"4.2. An approval number shall be assigned to each type approved. Its first two **digits shall** … paragraph 2.2. above."

Paragraph 4.4.3., shall be deleted

Paragraphs 5.1. to 5.1.1., to read:

"5.1. **Definitions**

5.1.1. The H point is a reference point as defined **in Annex 34** of this Regulation, ..."

Paragraph 5.2.2.1., amend to read:

"5.2.2.1. Any ISOFIX … defined in Figure 4 Annex **4**."

Paragraph 5.2.2.4., to read:

"5.2.2.4. The bottom surface … angles measured relatively to the vehicle reference planes as defined in Annex **3** – Appendix 2 …°

Paragraph 5.2.3.1., amend to read:

"5.2.3.1. Subject to … of Annex **4**, of the designated seating position for which it is installed, with the reference of a template described in SAE J 826 (July 1995) and shown in Annex **4**, Figure 5, according to the following conditions:"

Paragraph 5.2.3.2., amend to read:

"5.2.3.2. The ISOFIX top tether … in an ISOFIX position equipped with ISOFIX low anchorages as shown in Figure 11 of Annex **4.**

…

The intersection between the "ISO/F2" fixture rear face and the horizontal line (Annex **4**, Figure 11, reference 3) containing the last rigid point of a hardness greater than 50 Shore A at the top of the seat back defines the reference point 4 (Annex **4**, Figure 11) on the centreline of the "ISO/F2" fixture. At this reference point, a maximum angle of 45° above the horizontal line defines the upper limit of the top tether anchorage zone.

In the top view, at the reference point 4 (Annex **4**, Figure 11), a maximum angle of 90° extending …"

Paragraph 5.2.4.3., amend to read:

"5.2.4.3. Vehicle floor strength requirements for i-Size seating positions.

The entire vehicle floor contact surface (see Annex **5**, Figures 1 and 2) ..."

Paragraph 5.3.4., amend to read:

"5.3.4. Notwithstanding paragraph 5.3.1. vehicles …

…

(b) A rear designated seating position for which interference with transmission and/or suspension components prevents the installation of ISOFIX anchorages according to the requirements of paragraph **5.2.2**. and

…"

Paragraphs 6.1. and 6.1.1., amend to read:

"6.1. Securing the vehicle **for ISOFIX** anchorages tests

6.1.1. The method used to secure the vehicle during the test shall not be such as to **strengthen the** ISOFIX anchorages and their anchorage area or to lessen the normal deformation of the structure."

Paragraphs 6.2. and 6.2.1., shall be deleted

Paragraph 6.2.4.2., amend to read:

"6.2.4.2. … in Figure 2 of Annex **4.** Full application of the load shall be achieved as rapidly as possible, and within a maximum load application time of 30 seconds ..."

Paragraph 6.2.4.5., amend to read:

"6.2.4.5. …, which consists of a SFAD and includes a support leg test probe as defined in Figure 3 of Annex **5**, shall be performed. ..."

Paragraph 8.1., amend to read:

"8.1. Every … characteristics **of the** ISOFIX anchorages system and ISOFIX top tether anchorage."

Paragraph 9.1., amend to read:

"9.1. The … with or if **its ISOFIX** anchorages system and ISOFIX top tether anchorage failed to pass the checks prescribed in paragraph 8. above."

Paragraph 10, amend to read:

"10. Production definitively discontinued

If the holder of the approval completely ceases to manufacture a type **of ISOFIX** anchorages ..."

Annex 1, amend to read:

"Annex 1

… of a vehicle type with **regard to ISOFIX** anchorages systems, and ISOFIX top tether anchorages and i-Size seating positions if any pursuant to Regulation No. [XX]

…

16. The following documents, .. communication:

Drawings, diagrams and plans **of the ISOFIX anchorages** systems, of the top tether anchorages if any, vehicle floor contact surface of i-Size seating positions if any, and of the vehicle structure;

Photographs of the ISOFIX ..."

Annex 2, amend to read:

"Annex 2

…

The above approval mark affixed to a vehicle shows that the vehicle type concerned has, with regard to **ISOFIX anchorages systems, and ISOFIX top tether anchorages and i-Size seating positions -belt anchorages**, been approved in **France (E 24)**, pursuant to Regulation No. [XX], under the number **001424**. The first two digits of the approval number indicate that **the approval was granted in accordance with the requirements of** Regulation No. [XX] 00 series of **amendments.**"

…

The above approval mark affixed to a vehicle shows that the vehicle type concerned has been approved in the Netherlands (E 4) pursuant to Regulations Nos. [**XX**] and **11**[*]. The approval numbers indicate that on the dates on which these approvals were granted, Regulation No. [XX] 00 series of amendments and Regulation No. **11** was in its **02** series of amendments."

[*] The second number is given merely as an example.

Annex IX

[English only]

List of GRSP informal working groups

Informal working group	*Chair*	*Expiry date of the mandate [pending WP.29 decision]*	*Secretary*
Harmonized side impact dummies	Mr. David Sutula (USA) Phone : +1 202 366 32 73 Fax : +1 202 493 29 90 e-mail : david.sutula@dot.gov	December 2017	
Head Restraints (GTR7-Phase 2)	Mr. Bernard Frost (UK) Phone : +44-(0)207 9442107 Fax : +44-(0)207 9449623 e-mail : bernie.frost@dft.gsi.gov.uk	June 2018	OICA
Child Restraint Systems (CRS)	Mr. Pierre Castaing (France) Phone : +33 1-69801750 Fax : +33 1-69801719 e-mail : pierre.castaing@utac.com	December 2017	
Pedestrian Safety (GTR9-Phase 2)	Mr. Richard Damm (Germany) Tel.: +49 (0) 228 99 300 4302 Fax: +49 (0) 228 99 300 807 4302 e-mail: richard.damm@bmvbs.bund.de	December 2017	
Electric Vehicle Safety (EVS)	Mr. N. Nguyen (USA), (vice-chaired by the European Union and China) Phone: +1 202 366 69 34 Fax: +1 202 493 29 90 e-mail : nha.nguyen@dot.gov	December 2017	Japan
Three-dimensional H-point machine	Mr. L. Martinez (Spain) Phone: +34 91 336 53 00 Fax: +34 91 336 53 02 e-mail: luis.martinez@upm.es	[…]	
Hydrogen and Fuel Cell Vehicles (HFCV)	[…]	December 2020	[…]