ECE/TRANS/SC.3/172/Rev.1/Amend.3

ECONOMIC COMMISSION FOR EUROPE

INLAND TRANSPORT COMMITTEE

Working Party on Inland Water Transport

Recommendations on Harmonized Europe-Wide Technical Requirements for Inland Navigation Vessels

Resolution No. 61

Revision 1

Amendment 3

UNITED NATIONS
New York and Geneva, 2017

Additions and amendments to Resolution No. 61 on Recommendations on Harmonized Europe-Wide Technical Requirements for Inland Navigation Vessels

I. Note by the secretariat

1. In 2012, the Working Party on Inland Water Transport (SC.3) adopted several amendments to the annex to Resolution No. 61, revised (ECE/TRANS/SC.3/172/Rev.1/Amends.1-2).

2. Since then, on the basis of the work accomplished by the Group of Volunteer Experts on Resolution No. 61, SC.3 adopted further amendments as pending (ECE/TRANS/SC.3/2013/7 at its fifty-seventh session and ECE/TRANS/SC.3/2014/6 at its fifty-eighth session), as well as corrections of language discrepancies at its fifty-eighth session (Informal document SC.3 No. 5 (2014)).

3. This document represents the consolidated text of amended Chapters and sections of the annex to Resolution No. 61, revised, as adopted by SC.3 in 2013 and 2014. Detailed amendments to the annex to Resolution No. 61 can be found in ECE/TRANS/SC.3/2013/7 and ECE/TRANS/SC.3/2014/6.

II. Chapter 2, section 2-7.3 “Data for the identification of a vessel”

4. *Amend* section 2-7.*3 to read*:

2-7.3.1 All vessels

1. Unique European Identification Number
2. Name of the vessel
3. Type of vessel as defined in Article 1-2
4. Length overall
5. Breadth overall
6. Draught as defined in Article 1-2
7. Source of data (ship’s certificate)
8. Deadweight for cargo vessels
9. Displacement for vessels other than cargo vessels
10. Operator (owner or their representative), if possible with regard to privacy
11. Issuing Authority
12. Number of ship’s certificate
13. Expiration date of ship’s certificate
14. Creator of dataset (in case of electronic databases)
15. MMSI (Maritime Mobile Service Identifier) number

2-7.3.2 Where available

1. National number
2. Type of vessel in accordance with the International Standard for Notices to Skippers and for Electronic Ship Reporting in Inland Navigation (Resolution No. 60)
3. Single or double hull in accordance with ADN
4. Height as defined in Article 1-2
5. Gross tonnage (for sea-going ships)
6. IMO number (for sea-going ships)
7. Call sign (for sea-going ships)
8. ATIS (Automatic Transmitter Identification System) code
9. Type, number, issuing authority and expiration date of other certificates

III. Chapter 3, new section 3-6 “Other provisions”

5. After section 3-5 *add* a new section 3-6 *to read*:

“3-6 OTHER PROVISIONS

3-6.1 The fore sections of vessels shall be built in such a way that the anchors neither wholly nor partly protrude beyond the hull plating. A basin administration may accept other arrangemens as regards to stowage of the raised anchors as an equivalent safety level has been proved”.

IV. Chapter 4

6. *Amend* chapter 4 *as follows:*

“CHAPTER 4

SAFETY CLEARANCE, FREEBOARD AND DRAUGHT MARKS

4-1 GENERAL

4-1.1 This chapter specifies the minimum freeboard for inland waterway vessels. It also contains requirements concerning the indication of the freeboard mark and draught marks.

4-1.2 This chapter assumes that the nature and stowage of the cargo, ballast, etc., are such as to ensure adequate stability and as to obviate any excessive structural fatigue.

4-1.3 Freeboards as prescribed in this chapter shall be assigned on the assumption, first, that navigation will cease when weather conditions are such that the maximum wave height defining the zone or zones in which a vessel is to navigate may be exceeded, and second that in such conditions vessels already under way will seek shelter as quickly as possible.

4-1.4 The Administration may consider it sufficient if the vessel has been built and maintained in conformity with the rules of a recognized Classification Society.

4-2 TYPES OF VESSELS

For the purpose of this chapter, vessels shall be divided into three types:

(i) Decked vessels;

(ii) Tankers;

(iii) Open vessels.

Decked vessels: Decked vessels are vessels whose hatch covers are satisfactorily strong, rigid, watertight for zone 1 and spray proof for zones 2 and 3.

Tankers and similar vessels: These vessels have only small openings giving access to the tanks, the openings being closed by steel or equivalent covers with watertight fittings. Such vessels have the following characteristics:

(i) Very high watertight integrity of the exposed deck;

(ii) Very high resistance to flooding, through low permeability of the loaded compartments and through the degree of subdivision applied in general.

Open vessels: Open vessels are either vessels whose hatch covers are not satisfactorily strong, rigid, spray-proof or vessels whose cargo hatchways are open.

4-3 DRAUGHT MARKS AND FREEBOARD MARK

4-3.1 The plane of maximum draught shall be determined in such a way that the specifications concerning minimum freeboard and minimum safety clearance are both met. However, for safety reasons, the competent authority may lay down a greater value for the safety clearance or freeboard. The plane of maximum draught shall be determined at least for zone 3.

4-3.2 The plane of maximum draught shall be indicated by means of highly visible, indelible draught marks.

4-3.3 Vessels shall have at least three pairs of draught marks, of which one pair shall be centrally located and the two others located, respectively, at a distance from the bow and stern that is equal to roughly one-sixth of the length.

However,

(i) where a vessel is less than 40 m in length it will suffice to affix two pairs of marks at a distance from the bow and stern, respectively, that is equal to a quarter of the length;

(ii) where vessels are not intended for the carriage of goods, a pair of marks located roughly halfway along the vessel will suffice.

4-3.4 The draught marks for Zone 3 shall consist of a rectangle 300 mm long and 40 mm deep, the base of which is horizontal and coincides with the plane of the maximum authorized draught. Any differing draught marks shall include such a rectangle.

4-3.5 Marks or indications which cease to be valid following a further inspection shall be deleted or marked as being no longer valid under the supervision of the Administration. Draught marks may only be replaced under the supervision of the Administration.

4-3.6 Where a vessel has been measured in implementation of the 1966 Convention on the Measurement of Inland Navigation Vessels and the plane of the measurement marks meets the requirements of this Resolution, those measurement marks shall take the place of the draught marks; this shall be mentioned in the Ship's certificate.

4-3.7 For vessels operating on zones of inland waterways other than Zone 3 (Zones 1, 2 or 4) the bow and stern pairs of draught marks provided for in 4-3.3 shall be supplemented by adding a vertical line to which one or, in the case of several zones, several additional draught lines 150 mm long shall be affixed towards the bow, in relation to the draught mark for Zone 3.

This vertical line and the horizontal line shall be 30 mm thick. In addition to the draught mark towards the bow of the vessel, the relevant zone numbers shall be indicated in lettering 60 mm high × 40 mm deep (see Figure 4-3.7).

The lower edge of each draught line shall correspond to the plane of maximum authorised draught for the navigation zone concerned.

Figure 4-3.7
Measurement/draught scale

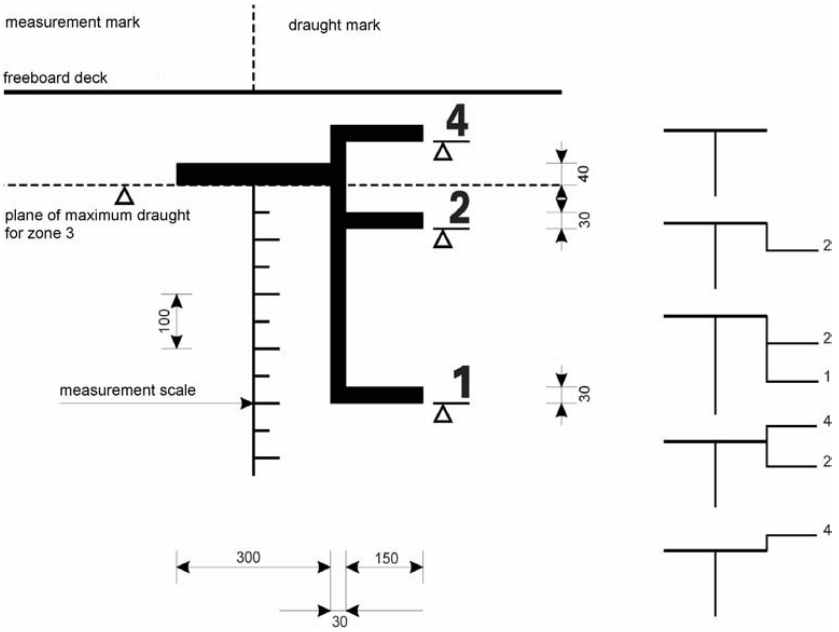

4-3.8 The centrally located measurement/draught scale for zones 1 and 2 may be replaced by a freeboard mark.

The freeboard mark consists of a ring intersected through its centre by a horizontal line which shall be supplemented if necessary by additional freeboard lines.

The width of the ring and of all the other lines of the freeboard mark shall be 30 mm; the outer diameter of the ring shall be 200 mm; the length of the horizontal line intersecting the ring shall be 300 mm; and the size of the numerals designating the zones shall be 60 x 40 mm (Figure 4-3.8).

Figure 4-3.8
Freeboard mark

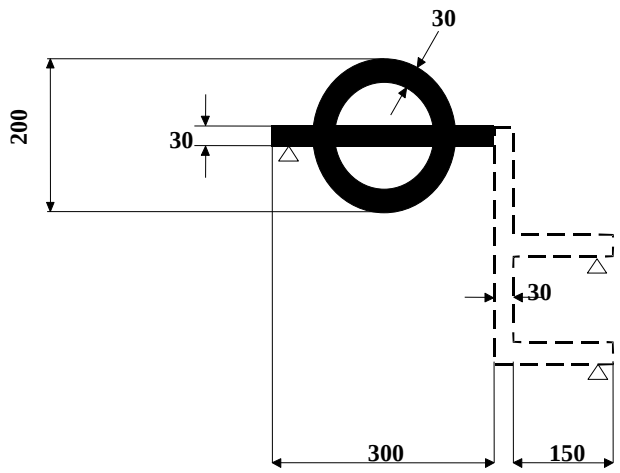

The centre of the ring shall be placed amidships. The lower edge of the horizontal line which intersects the ring shall pass through the centre of the ring and shall constitute the freeboard line.

If the vessel is intended to navigate in several navigation zones, a vertical line and additional freeboard lines 150 mm in length shall be applied forward of the centre of the ring.

4-3.9 Deck line and freeboard mark

When the centrally located measurement/draught scale has been replaced by a freeboard mark, the deck line must be indicated by the upper edge of a horizontal rectangle 300 mm long and 25 mm wide. This rectangle shall be marked amidships on each side of the hull, and its upper edge shall normally pass through the point where the continuation outwards of the upper surface of the freeboard deck intersects the outer surface of the shell amidships. However, the deck line may also be marked at a different height provided that the freeboard is corrected accordingly. The distance between the upper edge of the deck line and the freeboard mark constitutes the freeboard as mentioned in section 4-4.1.

4-4 FREEBOARD

4-4.1 Minimum freeboard in zones 1 and 2

4-4.1.1 Minimum freeboard (F) for decked vessels

	Minimum freeboard (F) [mm]	
Length of the vessel [m]	*Zone 1*	*Zone 2*
≤ 30	250	250
40	340	300
50	440	340
≥ 60	570	340

Note: In this and all subsequent tables, the values for the intermediate lengths of vessels shall be obtained by linear interpolation.

4-4.1.2 Minimum freeboard (F) for tankers and flush deck vessels

	Minimum freeboard (F) [mm]	
Length of the vessel [m]	***Zone 1***	***Zone 2***
≤ 30	180	160
40	250	220
50	330	220
≥ 60	420	220

4-4.1.3 The minimum freeboard for open vessels should be not less than:

For zone 1 — 1,000 mm,

zone 2 — 600 mm.

Furthermore, the sum of the freeboard and the height of coamings for these vessels must be not less than:

For zone 1 — 1,200 mm,

zone 2 — 1,000 mm.

4-4.1.4 The Administration may authorize corrections for the freeboard for vessels with poop, sheer and forecastle, providing that such corrections are calculated in conformity with the rules of the Administration or of a recognized Classification Society.

4-4.2 Minimum freeboard in zone 3

4-4.2.1 The basic freeboard of vessels with a continuous deck without superstructures and sheer shall be 150 mm.

4-4.2.2 The freeboard of vessels with sheer and superstructures shall be calculated using the following formula:

$$F = 150(1 - \alpha) - \frac{\beta_v \cdot Se_v + \beta_a \cdot Se_a}{15} \text{ [mm]},$$

where:

α is a correction coefficient that takes account of all of the superstructures involved;

β_v is a coefficient for correcting the effect of the forward sheer resulting from the presence of superstructures in the forward quarter of length L of the vessel;

β_a is a coefficient correcting the effect of the aft sheer resulting from the presence of superstructures in the aft quarter of length L of the vessel;

Se_v is the effective forward sheer in mm;

Se_a is the effective aft sheer in mm.

4-4.2.3 The coefficient α is calculated using the following formula:

$$\alpha = \frac{\sum Le_a + \sum Le_m + \sum Le_v}{L},$$

where:

le_m is the effective length, in m, of a superstructure located in the median part corresponding to half of length L of the vessel;

le_v is the effective length, in m, of a superstructure in the forward quarter of vessel length L;

le_a is the effective length, in m, of a superstructure in the aft quarter of vessel length L.

The effective length of a superstructure is calculated using the following formulae:

$$le_m = 1\left(2.5 \cdot \frac{b}{B} - 1.5\right) \cdot \frac{h}{0.36} \text{ [m]}$$

$$le_v\,, le_a = 1 \cdot \left(2.5\frac{b}{B_1} - 1.5\right) \cdot \frac{h}{0.36} \text{ [m]},$$

where:

l is the effective length, in m, of the superstructure involved;

b is the width, in m, of the superstructure involved;

B_1 is the width of the vessel, in m, measured on the outside of the vertical sideplates at deck level halfway along the superstructure involved;

h is the height, in m, of the superstructure involved. However, in the case of hatches, h is obtained by reducing the height of the coamings by half of the safety distance according to 4-5.2 and 4-5.3. In no case will a value exceeding 0.36 m be taken for h.

If $\frac{b}{B}$ or $\frac{b}{B_1}$ is less than 0.6, the effective length le of the superstructure will be zero.

4-4.2.4 Coefficients β_v and β_a are calculated using the following formulae:

$$\beta_v = I - \frac{3 \cdot le_v}{L},$$

$$\beta_a = I - \frac{3 \cdot le_a}{L}.$$

4-4.2.5 The effective aft/forward sheers Se_v/Se_a are calculated using the following formulae:

$$Se_v = S_v \cdot p,$$

$$Se_a = S_a \cdot p,$$

where:

S_v is the actual forward sheer, in mm; however S_v shall not be taken to be more than 1,000 mm;

S_a is the actual aft sheer, in mm; however S_a may not be taken to be more than 500 mm;

p is a coefficient calculated using the following formula:

$$p = 4 \cdot \frac{x}{L},$$

x is the abscissa, measured from the extremity of the point where the sheer is 0.25 S_v or 0.25 S_a (see Figure 4-3.9).

Figure 4-3.9

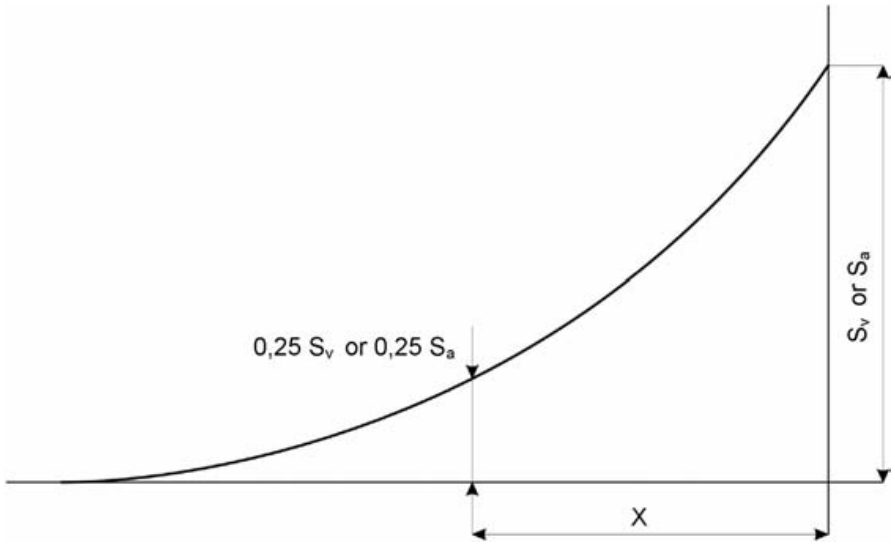

However, coefficient *p* will not be taken to be more than 1.

4-4.2.6 If $\beta a \cdot Se_a$ is greater than $\beta_v \cdot Se_v$, the value of $\beta_a \cdot Se_a$ will be taken as being the value for $\beta_v \cdot Se_v$.

4-4.2.7In view of the reductions referred to in 4-4.2.2 — 4-4.2.6 the minimum freeboard shall not be less than 0 mm.

4-5 SAFETY CLEARANCE

4-5.1 For decked vessels and tankers, the safety clearance as defined in 1-2 must not be less than 600 mm for zone 2.

For open vessels, as well as other vessels navigating with open holds, this distance shall be increased by 400 mm in zone 2. However, this increase applies only to the coamings of open holds.

4-5.2 For decked vessels and tankers navigating in zone 3, the safety clearance must not be less than 300 mm.

4-5.3 For open vessels navigating in zone 3, the safety clearance shall be increased in such a way that openings that cannot be closed by spray-proof and weathertight devices shall be at least 500 mm from the plane of maximum draught.

4-6 ARRANGEMENT OF OPENINGS AND COAMINGS

4-6.1 All outside doors of superstructure, deckhouses and companionways, situated on the freeboard deck shall be watertight on vessels in zone 1 and spray-proof on vessels in zones 2 and 3.

4-6.2 The coamings of hatchways, companionways and access openings to superstructures shall be not less than 300 mm high on vessels in zone 1 and 150 mm on vessels in zone 2.

4-6.3 If the height of the coamings is less than that required by this chapter, the minimum freeboard height shall be increased by the difference between the height required in 4-6.2 and the actual height of the coamings.

4-6.4 The freeboard height may not be reduced owing to an increase in the height of coamings below the figure indicated in 4-6.2.

4-6.5 Ventilator heads on the exposed parts of the freeboard deck shall be fitted with a strong steel coaming of a height not less than that required for hatchway coamings. Ventilator heads for vessels in zone 1 must have watertight closures.

4-6.6 Pipe outlets in the ship's sides below the freeboard deck shall be fitted with efficient and accessible devices to prevent water from entering the vessel.

4-6.7 On vessels in zone 1, side scuttles in spaces below the freeboard deck, windows in superstructures, deckhouses and companionways and windows in skylights on the freeboard deck must be watertight. In addition, side scuttles in spaces below the freeboard deck must be provided with permanently attached deadlights. The distance between side scuttles in the shell and the maximum draught level must not be less than 300 mm.

4-6.8 Skylights and windows must be of sturdy construction.

4-6.9 On vessels in zone 2, skylights and windows must be fitted with spray-proof covers which shall be permanently attached if the lowest part of the openings falls within the safety clearance (see 4-5.1).

4-6.10 The covers of Kingston valves and ice boxes must be watertight.

4-6.11 The scuppers and freeing ports in bulwarks shall be of sufficient size to drain the decks of shipped water.

4-7 SPECIAL REQUIREMENTS FOR SAFETY CLEARANCE AND FREEBOARD IN ZONE 4

4-7.1 By way of derogation from 4-5.2 and 4-5.3, the safety clearance of doors and openings other than hold hatches for vessels navigating on zone 4 waterways is reduced as follows:

(i) for openings which can be closed spray-proof and weathertight, to 150 mm;

(ii) for openings which cannot be closed spray-proof and weathertight, to 200 mm.

4-7.2 By way of derogation from 4-4.2.1, the minimum freeboard of vessels navigating on zone 4 waterways is 0 mm, if the safety clearance according to 4-7.1 is respected.

4-8 MAXIMUM LOADED DRAUGHT OF VESSELS WHOSE HOLDS ARE NOT ALWAYS CLOSED SO AS TO BE SPRAY-PROOF AND WEATHERTIGHT

If the plane of maximum draught for zone 3 of a vessel is determined by assuming that the holds may be closed in such a way as to make them spray-proof and weathertight, and if the distance between the plane of maximum draught and the upper edge of the coamings is less than 500 mm, the maximum draught for sailing with uncovered holds shall be determined.

The following statement shall be entered on the ship's certificate:

"Where the hold hatches are totally or partly uncovered the vessel may only be loaded up to ... mm below the draught marks for zone 3."

V. Chapter 10, section 10-1.4, "Chains and Cables"

7. *Amend* paragraph 10-1.4.5 *to read:*

10-1.4.5 Vessel shall be equipped with three mooring cables, the minimum lengths of which, in m, shall be as follows:

- First cable: L + 20, but not more than 100;
- Second cable: two thirds of the first cable;
- Third cable: one third of the first cable.

On vessel where L is less than 20 m, the third cable shall not be required.

Cables shall have a tensile strength *Rs* that is calculated using the following formulae:

for $L \cdot B \cdot T$ up to 1,000 m³: $R_s = 60 + \frac{L \cdot B \cdot T}{10}\ [kN]$;

for $L \cdot B \cdot T$ exceeding 1,000 m³: $R_s = 150 + \frac{L \cdot B \cdot T}{100}\ [kN]$.

For the required cables, a certificate in accordance with an international standard like ISO 10474 (1991), type 3.1, shall be on board.

These cables may be replaced by ropes having the same length and tensile strength. The minimum tensile strength of these ropes shall be indicated in a certificate.

For vessels designated for navigation on zones 1 and 2, the Administration may prescribe the use of the following formulae:

$$R_s = 0.15N + 25\ [kN],$$

where N = equipment number referred to in paragraph 10-1.2.2.

VI. Chapter 11, section 11-4, "Side Deck"

8. A*mend* paragraph 11-4.2 *to read*:

11-4.2 Up to a height of 0.90 m above the side deck, the clear width of the side deck may be reduced to 0.50 m provided that the clear width above, between the outer edge of the hull and the inner edge of the hold, is not less than 0.65 m.

VII. Chapter 15

9. *Amend* Chapter 15 *as follows:*

"CHAPTER 15

SPECIAL PROVISIONS FOR PASSENGER VESSELS

15-1 GENERAL PROVISIONS

15-1.1 The following provisions shall not apply:

(i) 4-4 and 4-5.1;

(ii) 8-1.6.2, sentence 2 and 8-1.6.7;

(iii) 9-2.11.3, sentence 2, for rated voltages of over 50V.

15-1.2 The following items of equipment are prohibited on passenger vessels:

(i) Lamps powered by liquefied gas or liquid fuel;

(ii) Vaporizing oil-burner stoves;

(iii) Solid fuel heaters;

(iv) Devices fitted with wick burners;

(v) Liquefied gas devices according to Chapter 14.

15-1.3 Vessels without their own power cannot be licensed for passenger transport.

15-1.4 On passenger vessels, areas shall be provided for use by persons with reduced mobility, according to the provisions of this chapter and with due regard to the Guidelines for passenger vessels also suited for carrying persons with reduced mobility (annex to Resolution No. 69). If the application of the provisions of this chapter which take into account the specific safety needs of people with reduced mobility is difficult in practice or incurs unreasonable costs, the Administration can allow derogations from these provisions. These derogations shall be mentioned in the ship's certificate.

15-2 VESSELS'S HULL

15-2.1 In the course of periodical inspections referred to in 2-4, the thickness of the outside plating of steel passenger vessels shall be determined as follows:

(i) The minimum thickness t_{min} of the bottom, bilge and side plating of the outer hull of passenger vessels is determined in accordance with the larger value of the following formulae:

$$t_{1\,min} = 0.006 \cdot a \cdot \sqrt{T} \text{ [mm]}; \; t_{2min} = f \cdot 0.55 \cdot \sqrt{L_{WL}} \text{ [mm]}.$$

In these formulae:

$$f = 1 + 0.0013\,(a - 500);$$

a = longitudinal or transverse frame spacing [mm], and where the frame spacing is less than 400 mm, a = 400 mm should be entered.

(ii) It is permissible to fall short of the minimum value determined in accordance with (i) above for the plate thickness in cases where the permitted value has been determined and certified on the basis of a mathematical proof for the sufficient strength (longitudinal, transverse and local) of the vessel's hull.

(iii) At no point of the outside plating shall the thickness calculated in accordance with (i) or (ii) above be less than 3 mm.

(iv) Plate renewals shall be carried out when bottom, bilge or side plate thicknesses have fallen short of the minimum value determined in accordance with (i) or (ii), in conjunction with (iii) above.

15-2.2 The number and position of bulkheads shall be selected such that, in the event of flooding, the vessel remains buoyant according to 15-3.7 to 15-3.13. Every portion of the internal structure which affects the efficiency of the subdivision of such vessels shall be watertight, and shall be of a design which will maintain the integrity of the subdivision.

15-2.3 The distance between the collision bulkhead and the forward perpendicular shall be at least 0.04 L_{WL} and not more than 0.04 L_{WL} + 2 m.

15-2.4 A transverse bulkhead may be fitted with a bulkhead recess, if all parts of this offset lie within the safe area.

15-2.5 The bulkheads, which are taken into account in the damaged stability calculation according to 15-3.7 to 15-3.13, shall be watertight and be installed up to the bulkhead deck. Where there is no bulkhead deck, these bulkheads shall extend to a height at least 20 cm above the margin line.

15-2.6 The number of openings in these bulkheads shall be kept as low as is consistent with the type of construction and normal operation of the ship. Openings and penetrations shall not have a detrimental effect on the watertight function of the bulkheads.

15-2.7 Collision bulkheads shall have no openings and no doors.

15-2.8 Bulkheads separating the engine rooms from passenger areas or crew and shipboard personnel accommodation shall have no doors.

15-2.9 Manually operated doors without remote control in bulkheads referred to in 15-2.5, are permitted only in areas not accessible to passengers. They shall:

(i) Remain closed at all times and be opened only temporarily to allow access;

(ii) Be fitted with suitable devices to enable them to be closed quickly and safely;

(iii) Display the following notice on both sides of the doors: “Close door immediately after passing through”.

15-2.10 Doors in bulkheads referred to in 15-2.5, that are open for long periods shall comply with the following requirements:

(i) They shall be capable of being closed from both sides of the bulkhead and from an easily accessible point above the bulkhead decks;

(ii) After being closed by remote control the door shall be such that it can be opened again locally and closed safely. Closure shall not be impeded by carpeting, foot rails or other obstructions;

(iii) The time taken for the remote-controlled closure process shall be at least 30 seconds but not more than 60 seconds;

(iv) During the closure procedure an automatic acoustic alarm shall sound by the door;

(v) The door drive and alarm shall also be capable of operating independently of the main on-board power supply. There shall be a device at the location of the remote control that displays whether the door is open or closed.

15-2.11 Doors in bulkheads referred to in 15-2.5, and their actuators shall be located in the safe area.

15-2.12 There shall be a warning system in the wheelhouse to indicate which of the doors in bulkheads referred to in 15-2.5 is open.

15-2.13 Open-ended piping and ventilation ducts shall be offset in such a way that, in any conceivable flooding, no additional spaces or tanks are flooded through them.

(i) If several compartments are openly connected by piping or ventilation ducts, such piping and ducts shall, in an appropriate place, be lead above the waterline corresponding to the worst possible flooding;

(ii) Piping need not meet the requirement above, if shut-off devices are fitted in the piping where it passes through the bulkheads and which can be remotely controlled from a point above the bulkhead deck;

(iii) Where a pipe work system has no open outlet in a compartment, the pipe work shall be regarded as intact in the event of this compartment being damaged, if it runs within the safe area and is more than 0.50 m from the bottom of the vessel.

15-2.14 Remote controls of bulkhead doors according to 15-2.10 and shut-off devices according to 15-2.13 (ii) above the bulkhead deck shall be clearly indicated as such.

15-2.15 Where double bottoms are fitted, their height shall be at least 0.60 m, and where wing voids are fitted, their width shall be at least 0.60 m.

15-2.16 Windows may be situated below the margin line, if they are watertight, cannot be opened, possess sufficient strength and conform to 15-6.16.

15-3 STABILITY

15-3.1 It shall be proved by a calculation based on the results from the application of a standard for intact stability that the intact stability of the vessel is appropriate. All calculations shall be carried out free to heel, trim and sinkage. The light ship data taken into account for the stability calculation shall be determined by means of a heeling test.

15-3.2 The intact stability shall be proven for the following standard load conditions:

(i) At the start of the voyage: 100% passengers, 98% fuel and fresh water, 10% waste water;

(ii) During the voyage: 100% passengers, 50% fuel and fresh water, 50% waste water;

(iii) At the end of the voyage: 100% passengers, 10% fuel and fresh water, 98% waste water;

(iv) Unladen vessel: no passengers, 10% fuel and fresh water, no waste water.

For all standard load conditions, the ballast tanks shall be considered as either empty or full in accordance with normal operational conditions.

In addition, the requirement of 15-3.3 (iv) shall be proved for the following load condition:

100% passengers, 50% fuel and fresh water, 50% waste water, all other liquid (including ballast) tanks are considered filled to 50%.

15-3.3 The proof of adequate intact stability by means of a calculation shall be produced using the following definitions for the intact stability and for the standard load conditions mentioned in 15-3.2 (i) to (iv):

(i) The maximum righting lever h_{max} shall occur at a heeling angle $\varphi_{max} \geq (\varphi_{mom} + 3°)$ and shall not be less than 0.20 m. However, in case $\varphi_f < \varphi_{max}$ the righting lever at the downflooding angle φ_f shall not be less than 0.20 m;

(ii) The downflooding angle φ_f shall not be less than $(\varphi_{mom} + 3°)$;

(iii) The area *A* under the curve of the righting levers shall, depending on the position of φ_f and φ_{max}, reach at least the following values:

Case			*A*
1	$\varphi_{max} \leq 15°$ or $\varphi_f \leq 15°$		0.05 m rad up to the smaller of the angles φ_{max} or φ_f
2	$15° < \varphi_{max} < 30°$	$\varphi_{max} \leq \varphi_f$	$0.035 + 0.001 \cdot (30 - \varphi_{max})$ m rad up to the angle φ_{max}
3	$15° < \varphi_f < 30°$	$\varphi_{max} > \varphi_f$	$0.035 + 0.001 \cdot (30 - \varphi_f)$ m rad up to the angle φ_f
4	$\varphi_{max} \geq 30°$ and $\varphi_f \geq 30°$		0.035 m rad up to the angle $\varphi = 30°$

where:

h_{max} is the maximum lever;

φ is the heeling angle;

φ_f is the downflooding angle, that is the heeling angle, at which openings in the hull, in the superstructure or deck houses which cannot be closed so as to be watertight, submerge;

φ_{mom} the maximum heeling angle according to (v);

φ_{max} is the heeling angle at which the maximum righting lever occurs;

A area beneath the curve of the righting levers.

(iv) the initial metacentric height, $\overline{GM_0}$, corrected by the effect of the free surfaces of liquid in tanks, shall not be less than 0.15 m;

(v) in each of the following two cases the heeling angle φ_{mom} shall not exceed 12°:

- in application of the heeling moment due to persons and wind according to 15-3.4 and 15-3.5;
- in application of the heeling moment due to persons and turning according to 15-3.4 and 15-3.6

(vi) for a heeling moment resulting from moments due to persons, wind and turning according to 15-3.4, 15-3.5 and 15-3.6, the residual freeboard shall be not less than 0.20 m;

(vii) for vessels with windows or other openings in the hull located below the bulkhead decks and not closed watertight, the residual safety clearance shall be at least 0.10 m on the application of the three heeling moments resulting from subsection (vi).

15-3.4 The heeling moment due to one-sided accumulation of persons shall be calculated according to the following formulae:

$$M_P = g \cdot P \cdot y = g \cdot \sum P_i \cdot y_i \text{ [kNm]}$$

where:

P	=	total mass of persons on board in [t], calculated by adding up the maximum permitted number of passengers and the maximum number of shipboard personnel and crew under normal operating conditions, assuming an average mass per person of 0.075 *t*;
y	=	lateral distance of centre of gravity of total mass of persons P from centre line in [m];
g	=	acceleration of gravity (g = 9.81 m/s^2);
P_i	=	mass of persons accumulated on area A_i in [t];
P_i	=	$n_i \cdot 0.075 \cdot A_i$ [t]

where:

A_i	=	area occupied by persons in [m^2];
n_i	=	number of persons per square meter;
n_i	=	3.75 for free deck areas and deck areas with movable furniture; for deck areas with fixed seating furniture such as benches, n_i shall be calculated by assuming an area of 0.50 m in width and 0.75 m in seat depth per person;
y_i	=	lateral distance of geometrical centre of area A_i from centre line in [m].

The calculation shall be carried out for an accumulation of persons both to starboard and to port.

The distribution of persons shall correspond to the most unfavourable one from the point of view of stability. Cabins shall be assumed unoccupied.

For the calculation of the loading cases, the centre of gravity of a person should be taken as 1 m above the lowest point of the deck at 0.5 L_{WL}, ignoring any deck curvature and assuming a mass of 0.075 t per person.

A detailed calculation of deck areas which are occupied by persons may be dispensed with if the following values are used:

P	=	$1.1 \cdot F_{max} \cdot 0.075$	for day trip vessels
		$1.5 \cdot F_{max} \cdot 0.075$	for cabin vessels

where:

F_{max}	=	maximum permitted number of passengers on board;
Y	=	B/2 in [m].

15-3.5 The heeling moment due to wind pressure (M_{wst}) shall be calculated as follows:

$$M_{wst} = p_w \cdot A_w \cdot (l_w + T/2) \text{ [kNm]}$$

where:

p_w = the specific wind pressure of 0.25 kN/m^2 for zone 3. However, on waterways of zones 1 and 2 the basin Administration may set higher values;

A_w = lateral plane of the vessel above the waterline according to the considered load conditions as given in 15-3.2, in m^2;

l_w = distance of the centre of gravity of the lateral plane A_W from the waterline according to the considered load conditions as given in 15-3.2, in m.

15-3.6 The heeling moment due to centrifugal force (M_{cf}), caused by the turning of the vessel, shall be calculated as follows:

$$M_{cf} = c_{cf} \cdot C_E \cdot v^2 \cdot D/L_{WL} \cdot (KG - T/2) \ \ [kNm]$$

where:

c_{cf} = a coefficient of 0.45;

C_B = block coefficient (if not known, taken as 1.0);

v = maximum speed of the vessel in m/s;

KG = distance between the centre of gravity and the baseline in m.

For passenger vessels with propulsion systems according to 6-6, M_{cf} shall be derived from full-scale or model tests or else from corresponding calculations.

15-3.7 It shall be proved, by means of a calculation based on the method of lost buoyancy, that the damaged stability of the vessel is appropriate. All calculations shall be carried out with free sinkage, heel and trim.

15-3.8 Buoyancy of the vessel in the event of flooding shall be proven for the standard load conditions specified in 15-3.2. Accordingly, mathematical proof of sufficient stability shall be determined for the three intermediate stages of flooding (25%, 50% and 75% of flood build-up) and for the final stage of flooding.

15-3.9 Vessels operating in zones 1, 2 and 3 shall comply with 1-compartment status and 2-compartment status.[1]

The following assumptions concerning the extent of damage shall be taken into account in the event of flooding:

	1-compartment status	*2-compartment status*
Dimension of the side damage		
longitudinal *l* [m]	0.10 L_{WL}, however not less than 4.00 m	0.05 L_{WL}, however not less than 2.25 m
transverse *b* [m]	*B/5*	0,59
vertical *h* [m]	from vessel bottom to top without delimitation	
Dimension of the bottom damage		
longitudinal *l* [m]	0,10 · L_{WL}, however not less than 4.00 m	0,05 · L_{WL}, however not less than 2.25 m
transverse *b* [m]	*B/5*	
vertical *h* [m]	0,59; pipe work installed according to 15-2.13 (iii), shall be deemed intact	

[1] The Basin Administration may waive the requirements prescribed in this paragraph with regard to the 2-compartment status.

(i) For 1-compartment status the bulkheads can be assumed to be intact if the distance between two adjacent bulkheads is greater than the damage length. Longitudinal bulkheads at a distance of less than B/3 from the outer plating measured perpendicular to centre line from the shell plating at the maximum draught shall not be taken into account for calculation purposes. A bulkhead recess in a transverse bulkhead that is longer than 2.50 m, is considered a longitudinal bulkhead;

(ii) For 2-compartment status, each bulkhead within the extent of damage, will be assumed to be damaged. This means that the position of the bulkheads shall be selected in such a way as to ensure that the passenger vessel remains buoyant after flooding of two or more adjacent compartments in the longitudinal direction;

(iii) The lowest point of every non-watertight opening (e.g. doors, windows, access hatchways) shall lie at least 0.10 m above the damaged waterline. The bulkhead deck shall not be immersed in the final stage of flooding;

(iv) Permeability is assumed to be 95%. If it is proven by a calculation that the average permeability of any compartment is less than 95%, the calculated value can be used instead.

The values to be adopted shall not be less than:

- Lounges 95%
- Engine and boiler rooms 85%
- Luggage and store rooms 75%

Double bottoms, fuel bunkers, ballast tanks and other tanks, depending on whether, according to their intended purpose, they are to be assumed to be full or empty for the vessel floating at the plane of maximum draught 0 or 95%;

(v) If damage of a smaller dimension than specified above produces more detrimental effects with respect to heeling or loss of metacentric height, such damage shall be taken into account for calculation purposes.

15-3.10 For all intermediate stages of flooding referred to in 15-3.8, the following criteria shall be met:

(i) The heeling angle φ at the equilibrium position of the intermediate stage in question shall not exceed 15°;

(ii) Beyond the heel in the equilibrium position of the intermediate stage in question, the positive part of the righting lever curve shall display a righting lever value of GZ ≥ 0.02 m before the first unprotected opening becomes immersed or a heeling angle φ of 25° is reached;

(iii) Non-watertight openings shall not be immersed before the heel in the equilibrium position of the intermediate stage in question has been reached;

(iv) The calculation of free surface effect in all intermediate stages of flooding shall be based on the gross surface area of the damaged compartments.

15-3.11 During the final stage of flooding, the following criteria shall be met taking into account the heeling moment in accordance with 15-3.4:

(i) The heeling angle φ_E shall not exceed 10°;

(ii) Beyond the equilibrium position the positive part of the righting lever curve shall display a righting lever value of $GZ_R \geq 0.02$ m with an area $A \geq 0.0025$ m rad. These minimum values for stability shall be met until the immersion of the first unprotected opening or in any case before reaching a heeling angle φ_m of 25°;

(iii) Non-watertight openings shall not be immersed before the equilibrium position has been reached; if such openings are immersed before this point, the rooms affording access are deemed to be flooded for damaged stability calculation purposes.

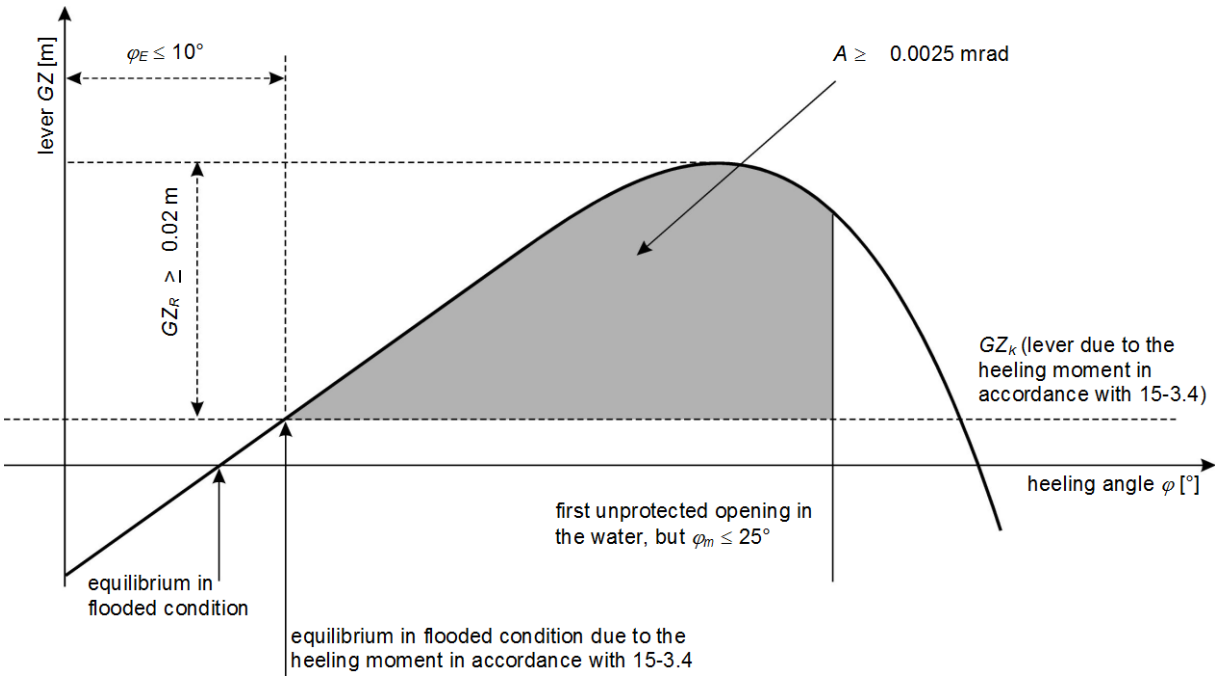

where:

φ_E is the heeling angle in the final stage of flooding taking into account the moment in accordance with 15-3.4;

φ_m is the angle of vanishing stability or the angle at which the first unprotected opening immerses or 25°; whichever is less is to be used;

GZ_R is the remaining righting lever in the final stage of flooding taking into account the moment in accordance with 15-3.4;

GZ_K is the heeling lever resulting from the moment in accordance with 15-3.4;

15-3.12 The shut-off devices which shall be able to be closed watertight shall be marked accordingly.

15-3.13 If cross-flood openings to reduce asymmetrical flooding are provided, they shall meet the following conditions:

(i) For the calculation of cross-flooding, IMO Resolution A.266 (VIII) shall be applied;

(ii) They shall be self-acting;

(iii) They shall not be equipped with shut-off devices;

(iv) The total time allowed for compensation shall not exceed 15 minutes.

15-4 SAFETY CLEARANCE AND FREEBOARD

15-4.1 The safety clearance shall be at least equal to the sum of:

(i) The additional lateral immersion, which, measured on the outside plating, is produced by the permissible heeling angle according to 15-3.3 (v); and

(ii) The residual safety clearance according to 15-3.3 (vii).

For vessels without a bulkhead deck, the safety clearance shall be not less than: 1,900 mm in zone 1, 1,000 mm in zone 2 and 500 mm in zone 3.

15-4.2 The freeboard shall be at least equal to the sum of:

(i) The additional lateral immersion, which, measured on the outside plating, is produced by the heeling angle according to 15-3.3 (v), and

(ii) The residual freeboard according to 15-3.3 (vi).

However, the remaining freeboard shall be not less than: 600 mm in zone 1,400 mm in zone 2 and 300 mm in zone 3.

15-4.3 The maximum draught level is to be set so as to ensure compliance with the safety clearance according to 15-4.1, and the freeboard according to 15-4.2, 15-2 and 15-3.

15-4.4 For safety reasons, the Administration may stipulate a greater safety clearance or a greater freeboard.

15-5 MAXIMUM PERMITTED NUMBER OF PASSENGERS

15-5.1 The Administration sets the maximum permitted number of passengers and enters this number on the certificate.

15-5.2 The maximum permitted number of passengers shall not exceed any of the following values:

(i) Number of passengers for whom the existence of an evacuation area according to 15-6.8 has been proven;

(ii) Number of passengers that has been taken into account for the stability calculation according to 15-3;

(iii) Number of available berths for passengers on cabin vessels used for voyages including overnight stays.

15-5.3 For cabin vessels which are also used as day trip vessels**,** the number of passengers shall be calculated for use, both as a day trip vessel and as a cabin vessel, and entered on the certificate.

15-5.4 The maximum permitted number of passengers shall be displayed on clearly legible and prominently positioned notices on board the vessel.

15-6 PASSENGER ROOMS AND AREAS

15-6.1 Passenger rooms shall:

(i) On all decks, be located aft of the level of the collision bulkhead and, as long as they are below the bulkhead deck, forward of the level of the aft-peak bulkhead;

(ii) Be separated from the engine and boiler rooms in a gas-tight manner; and

(iii) Be so arranged, that sight lines in accordance with 7-2 do not pass through them.

15-6.2 Cupboards and rooms referred to in 3A-3 and intended for the storage of flammable liquids shall be outside the passenger area.

15-6.3 The number and width of the exits of passenger rooms shall comply with the following requirements:

(i) Rooms or groups of rooms designed or arranged for 30 or more passengers or including berths for 12 or more passengers shall have at least two exits. On day trip vessels, one of these two exits can be replaced by two emergency exits; rooms, with the exception of cabins, and groups of rooms that have only one exit, shall have at least one emergency exit;

(ii) If rooms are located below the bulkhead deck, one of the exits can be a watertight bulkhead door, according to 15-2.10, leading into an adjacent compartment from which the upper deck can be reached directly. The other exit shall lead directly or, if permitted in accordance with (i), as an emergency exit into the open air, or to the bulkhead deck. This requirement does not apply to individual cabins;

(iii) Exits according to (i) and (ii) shall be suitably arranged and shall have a clear width of at least 0.80 m and also a clear height of at least 2.00 m. For doors of passenger cabins and other small rooms, the clear width can be reduced to 0.70 m;

(iv) In the case of rooms or groups of rooms intended for more than 80 passengers the sum of the widths of all exits intended for passengers and which shall be used by them in an emergency, shall be at least 0.01 m per passenger;

(v) If the total width of the exits is determined by the number of passengers, the width of each exit shall be at least 0.005 m per passenger;

(vi) Emergency exits shall have a shortest side at least 0.60 m long or a minimum diameter of 0.70 m. They shall open in the direction of escape and be marked on both sides;

(vii) Exits of rooms intended for use by persons with reduced mobility shall have a clear width of at least 0.90 m. Exits normally used for embarking and disembarking people with reduced mobility shall have a clear width of at least 1.50 m.

15-6.4 Doors of passenger rooms shall comply with the following requirements:

(i) With the exception of doors leading to connecting corridors, they shall be capable of opening outwards or be constructed as sliding doors;

(ii) Cabin doors shall be made in such a way that they can also be unlocked from the outside at any time;

(iii) Powered doors shall open easily in the event of failure of the power supply to this mechanism;

(iv) For doors intended for use by persons with reduced mobility, there shall be from the direction from which the door opens, a minimum clearance of 0.60 m between the inner edge of the doorframe on the lock side and an adjacent perpendicular wall.

15-6.5 Connecting corridors shall comply with the following requirements:

(i) They shall have a clear width of at least 0.80 m. If they lead to rooms used by more than 80 passengers, they shall comply with the provisions mentioned in 15-6.3 (iv) and (v) regarding the width of the exits leading to connecting corridors;

(ii) Their clear height shall be not less than 2.00 m;

(iii) Connecting corridors intended for use by persons with reduced mobility shall have a clear width of 1.30 m. Connecting corridors more than 1.50 m wide shall have hand rails on either side;

(iv) Where a part of the vessel or a room intended for passengers is served by a single connecting corridor, the clear width thereof shall be at least 1.00 m;

(v) Connecting corridors shall be free of steps;

(vi) They shall lead only to open decks, rooms or staircases;

(vii) Dead ends in connecting corridors shall be not longer than 2.00 m.

15-6.6 In addition to the provisions of 15-6.5, escape routes shall also comply with the following requirements:

(i) Stairways, exits and emergency exits shall be so disposed that, in the event of a fire in any given area, the other areas may be evacuated safely;

(ii) The escape routes shall lead by the shortest route to evacuation areas according to 15-6.8;

(iii) Escape routes shall not lead through engine rooms or galleys;

(iv) There shall be no rungs, ladders or the like installed at any point along the escape routes;

(v) Doors to escape routes shall be constructed in such a way as not to reduce the minimum width of the escape route referred to in 15-6.5 (i) or (iv);

(vi) Escape routes and emergency exits shall be clearly signed. The signs shall be lit by the emergency lighting system.

15-6.7 Escape routes and emergency exits shall have a suitable safety guidance system.

15-6.8 For all persons on board, there shall be muster areas available which satisfy the following requirements:

(i) The total area of the muster areas (A_S) shall correspond to at least the following value:

- Day trip vessels: $A_S = 0.35 \cdot F_{max}$ [m²]
- Cabin vessels: $A_S = 0.45 \cdot F_{max}$ [m²]

In these formulae, the following definition applies:

F_{max} = maximum permitted number of passengers on board;

(ii) Each individual muster or evacuation area shall be larger than 10 m^2;

(iii) The muster areas shall be clear of furniture, whether movable or fixed;

(iv) If movable furniture is located in a room in which muster areas are defined, it shall be secured appropriately to avoid slipping;

(v) If fixed seats or benches are located in a room in which muster areas are defined the corresponding number of persons need not be taken into account when calculating the total area of muster areas according to (i). However, the number of persons for whom fixed seats or benches in a certain room are taken into account must not exceed the number of persons for whom muster areas are available in this room;

(vi) Life-saving appliances shall be easily accessible from the evacuation areas;

(vii) It shall be possible to evacuate people safely from these evacuation areas, using either side of the vessel;

(viii) The muster areas shall lie above the margin line;

(ix) The muster and evacuation areas are to be shown as such in the safety plan and signposted on board the vessel;

(x) The provisions of (iv) and (v) also apply to free decks on which muster areas are defined;

(xi) If collective life-saving appliances complying with 10-5.1.1.1, are available on board, the number of persons for whom such appliances are available may be disregarded when calculating the total surface area of the muster areas referred to in (i);

(xii) However, in all cases where reductions to (v), (x) and (xi) are applied the total area according to (i) shall be sufficient for at least 50% of the maximum permitted number of passengers.

15-6.9 Stairs and their landings in the passenger areas shall comply with the following requirements:

(i) They shall be constructed in accordance with a recognized international standard;

(ii) They shall have a clear width of at least 0.80 m or, if they lead to connecting corridors or areas used by more than 80 passengers, at least 0.01 m per passenger;

(iii) They shall have a clear width of at least 1.00 m if they provide the only means of access to a room intended for passengers;

(iv) Where there is not at least one staircase on each side of the vessel in the same room, they shall lie in the safe area;

(v) In addition, stairs intended for use by persons with reduced mobility shall comply with the following requirements:

- The gradient of the stairs shall not exceed 38°;
- The stairs shall have a clear width of at least 0.90 m;
- Spiral staircases are not allowed;
- The stairs shall not run in a direction transverse to the vessel;
- The handrails of the stairs shall extend approximately 0.30 m beyond the top and bottom of the stairs without restricting traffic routes;
- Handrails, front sides of at least the first and the last step as well as the floor coverings at the ends of the stairs shall be colour highlighted.

15-6.10 Lifts intended for persons with reduced mobility, and lifting equipment, like stairlifts or lifting platforms, shall be constructed according to a relevant standard or a regulation of the Administration.

15-6.11 Parts of the deck intended for passengers, and which are not enclosed, shall comply with the following requirements:

(i) They shall be surrounded by a fixed bulwark or guard rail at least 1.00 m high or a railing according to a recognized international standard. Bulwarks and railings of decks intended for use by persons with reduced mobility shall be at least 1.10 m high;

(ii) Openings and equipment for embarking or disembarking and also openings for loading or unloading shall be such that they can be secured and have a clear width of at least 1.00 m. Openings, used normally for the embarking or disembarking of persons with reduced mobility, shall have a clear width of at least 1.50 m;

(iii) If the openings and equipment for embarking or disembarking cannot be observed from the wheelhouse, optical or electronic aids shall be provided;

(iv) Passengers sitting down shall not interrupt sight lines in accordance with 7-2.

15-6.12 The parts of the vessel not intended for passengers, in particular access to the wheelhouse, to the winches and to the engine rooms, shall be such that they can be secured against unauthorized entry. At any such access, a symbol corresponding to sketch 1 in appendix 3 shall be displayed in a prominent position.

15-6.13 Gangways shall be constructed in accordance with a recognized international standard. By way of derogation from 10-2.1 fifth indent, their length can be less than 4 m.

15-6.14 Traffic areas intended for use by persons with reduced mobility shall have a clear width of 1.30 m and be free of doorsteps and sills more than 0.025 m high. Walls in traffic areas, intended for use by persons with reduced mobility shall be equipped with handrails at a height of 0.90 m above the floor.

15-6.15 Glass doors and walls in traffic areas and also window panes shall be manufactured from pre-stressed glass or laminated glass. They may also be made from a synthetic material, provided this is authorized for use in a fire-protection context.

Transparent doors and transparent walls extending as far as the floor on traffic areas shall be prominently marked.

15-6.16 Superstructures or their roofs consisting completely of panoramic panes shall only be manufactured from materials which, in the event of an accident, reduce as much as possible the risks of injury to the persons on board.

15-6.17 Potable water systems shall, at least, comply with the requirements of 12-8.

15-6.18 There shall be toilets available for passengers. At least one toilet shall be fitted for use by persons with reduced mobility according to a relevant standard or a regulation of the Administration and shall be accessible from areas intended for use by persons with reduced mobility.

15-6.19 Cabins without an opening window shall be connected to a ventilation system.

15-6.20 By analogy, rooms in which crew members or shipboard personnel are accommodated shall comply with the provisions of this section.

15-7 PROPULSION SYSTEM [2]

15-7.1 In addition to the main propulsion system, vessels shall be equipped with a second independent propulsion system so as to ensure that, in the event of a breakdown affecting the main propulsion system, the vessel can continue to make steerageway under its own power.

15-7.2 The second independent propulsion system shall be placed in a separate engine room. If both engine rooms have common partitions, these shall be built according to 15-11.2.

15-8 SAFETY DEVICES AND EQUIPMENT

15-8.1 All passenger vessels shall have internal communication facilities according to 7-6.6.3. Such facilities shall also be available in the operational rooms and — where there is no direct communication from the wheelhouse — in the muster and evacuation areas for passengers as referred to in 15-6.8.

15-8.2 All passenger areas shall be reachable via a loudspeaker system. The system shall be designed in such a way as to ensure that the information transmitted can be clearly distinguished from background noise. Loudspeakers are optional where direct communication between the wheelhouse and the passenger area is possible.

15-8.3 The vessel shall be equipped with an alarm system. The system shall include:

(i) An alarm system enabling passengers, crew members and shipboard personnel to alert the vessel's command and crew.

This alarm shall be given only in areas assigned to the vessel’s command and to the crew; it shall only be possible for the vessel’s command to stop the alarm. The alarm shall be capable of being triggered from at least the following places:

- In each cabin;

[2] The Basin administration may waive the requirements prescribed in this section.

- In the corridors, lifts and stairwells, with the distance to the nearest trigger not exceeding 10 m and with at least one trigger per watertight compartment;
- In lounges, dining rooms and similar recreation rooms;
- In toilets, intended for use by persons with reduced mobility;
- In engine rooms, galleys and similar rooms where there is a fire risk;
- In the cold-storage rooms and other store rooms.

The alarm triggers shall be installed at a height above the floor of 0.85 m to 1.10 m.

(ii) An alarm system enabling the vessel's command to alert passengers.

This alarm shall be clearly and unmistakably audible in all rooms accessible to passengers. It shall be capable of being triggered from the wheelhouse and from a location that is permanently staffed.

(iii) An alarm system enabling the vessel’s command to alert the crew and shipboard personnel.

The alarm system referred to in 7-5.2, shall also reach the recreation rooms for the shipboard personnel, the cold-storage rooms and other store rooms.

Alarm triggers shall be protected against unintentional use.

15-8.4 Each watertight compartment shall be fitted with a bilge level alarm.

15-8.5 Two motor-driven bilge pumps shall be provided.

15-8.6 A bilge pumping system with permanently installed pipe work shall be available.

15-8.7 Cold storage room doors, even when locked, shall also be capable of being opened from the inside.

15-8.8 Where CO_2 bar-systems are situated in rooms below deck these rooms shall be fitted with an automatic ventilation system. The ventilation ducts shall run down to 0.05 m from the floor of this room.

15-8.9 In addition to the first-aid kit specified in 10-2.1**,** additional first-aid kits shall be provided in sufficient number. The first-aid kits and their storage shall comply with the requirements set out in 10-2.1, ninth indent**.**

15-9 LIFE SAVING APPLIANCES

15-9.1 In addition to the life jackets specified in 10-5.4.2.1 (iii) and 10-5.4.3 (ii) passenger vessels shall be supplied with additional lifejackets for children in quantity equal to 10% of the total number of passengers. In addition to the lifebuoys specified in 10-5.3.4, 10-5.4.2.1 (iv) and 10-5.4.3 (iii) all parts of the deck intended for passengers and not enclosed shall be equipped with lifebuoys on both sides of the vessel, positioned not more than 20 m apart. Lifebuoys shall be considered as suitable if they comply with 10-5.2.3.

Half of all the prescribed lifebuoys shall be fitted with a buoyant cord at least 30 m long with a diameter of 8 to 11 mm. The other half of the prescribed lifebuoys shall be fitted with a self-igniting, battery-powered light which will not be extinguished in water.

15-9.2 In addition to the lifebuoys referred to in 15-9.1, individual life-saving equipment according to 10-5.4.2.1 (iii) and 10-5.4.3 (ii) shall be within reach for all shipboard personnel. For shipboard personnel not responsible for undertaking duties according to the safety rota, not inflatable or semi-automatically inflatable lifejackets according to the standards mentioned in 10-5.2.2, are allowed.

15-9.3 Passenger vessels shall have appropriate equipment to enable persons to be transferred safely to shallow water, to the bank or to another craft.

15-9.4 In addition to the life-saving equipment referred to in 15-9.1 and 15-9.2, individual life-saving equipment shall be available for 100% of the maximum permitted number of passengers. Not inflatable or semi-automatically inflatable lifejackets according to 10-5.2.2 are also allowed.

15-9.5 In addition to 10-5.1, life rafts must:

(i) offer adequate seating space for the permitted number of persons;

(ii) provide a buoyancy of at least 750 N per person in fresh water;

(iii) be provided with appropriate means of evacuation from the evacuation areas referred to in 15-6.8, onto the life rafts if the vertical distance between the deck of the evacuation areas and the plane of maximum draught is greater than 1 m.

15-9.6 The life-saving appliances shall be stowed on board in such a way that they can be reached easily and safely when required. Concealed storage places shall be clearly marked.

15-9.7 The ship's boat shall be equipped with an engine and a searchlight.

15-9.8 A suitable stretcher shall be available.

15-9.9 For vessels with 2-compartment status or 1-compartment status and having a double hull the Administration may reduce the aggregate capacity of collective life-saving appliances referred to in 10-5.4.2.1 or 10-5.4.3.

15-10 ELECTRICAL EQUIPMENT

15-10.1 Only electrical equipment is permitted for lighting.

15-10.2 The provision of 9-2.13.4 applies also for passageways and recreation rooms for passengers.

15-10.3 For the following rooms and locations, adequate lighting shall be provided:

(i) locations where life-saving equipment is stored and where such equipment is normally prepared for use;

(ii) escape routes, access for passengers, including gangways, entrances and exits, connecting corridors, lifts and accommodation area companionways, cabin areas and accommodation areas;

(iii) markings on the escape routes and emergency exits;

(iv) in other areas intended for use by persons with reduced mobility;

(v) control centres, engine rooms, steering equipment rooms and their exits;

(vi) wheelhouse;

(vii) emergency power supply room;

(viii) points at which extinguishers and fire extinguishing equipment controls are located;

(ix) areas in which passengers, shipboard personnel and crew muster in the event of danger.

15-10.4 In addition to 9-2.16.6, adequate emergency lighting shall be provided for the following rooms and locations:

(i) escape routes, access for passengers, including gangways, entrances and exits, connecting corridors, lifts and accommodation area companionways, cabin areas and accommodation areas;

(ii) markings on the escape routes and emergency exits;

(iii) in other areas intended for use by persons with reduced mobility;

(iv) control centres, steering equipment rooms and their exits;

(v) emergency power supply room;

(vi) points at which extinguishers and fire extinguishing equipment controls are located.

15-10.5 There shall be an emergency power plan in accordance with 9-2.16, consisting of an emergency power source and emergency switchboard, which, in the event of a failure of the supply to the following electrical equipment, can immediately take over as their replacement supply, where the equipment does not have its own power source:

(i) signal lights;

(ii) audible warning devices;

(iii) emergency lighting in accordance with 9-2.16.6 and 15-10.4;

(iv) radiotelephone installations;

(v) alarm, loudspeaker and on-board message communications systems;

(vi) searchlights (spot light) according to 23-9.1(viii);

(vii) fire alarm system;

(viii) other safety equipment such as automatic pressurised sprinkler systems or fire extinguishing pumps;

(ix) lifts and lifting equipment within the meaning of 15-6.10.

15-10.6 The light fittings for the emergency lighting shall be marked as such.

15-10.7 Cables feeding the electrical installations in the event of an emergency shall be installed and routed in such a way as to maintain the continuity of supply of these installations in the event of fire or flooding. These cables shall never be routed through the main engine room, galleys or rooms where the main power source and its connected equipment is installed, except insofar as it is necessary to provide emergency equipment in such areas.

15-10.8 The insulation resistances and the earthing for electrical systems shall be tested on the occasion of inspections according to 2-5.1.

15-10.9 The power sources according to 9-1.2.1 must be independent of each other.

15-10.10 A failure of the main or emergency power equipment shall not mutually affect the operational safety of the installations.

15-11 FIRE PROTECTION

15-11.1 The suitability for fire protection of materials and components shall be established by a competent body recognized by the Administration on the basis of appropriate test methods.

15-11.2 Partitions between rooms shall be designed in accordance with the following tables:

Table for partitions between rooms,
in which no pressurized sprinkler systems according to 10-3.6 are installed

Rooms	*Control centres*	*Stair-wells*	*Muster areas*	*Lounges*	*Engine rooms*	*Galleys*	*Store rooms*
Control centres	-	A0	A0/B15[3]	A30	A60	A60	A30/A60[9]
Stairwells		-	A0	A30	A60	A60	A30
Muster areas			-	A30/B15[4]	A60	A60	A30/A60[9]
Lounges				A0/B15[5]	A60	A60	A30
Engine rooms					A60/A0[6]	A60	A60
Galleys						A0	A30/B15[10]
Store rooms							-

[3] Partitions between control centres and internal muster areas shall correspond to Type A0, but external muster areas only to Type B15.

[4] Partitions between lounges and internal muster areas shall correspond to Type A30, but external muster areas only to Type B15.

[5] Partitions between cabins, partitions between cabins and corridors and vertical partitions separating lounges according to 15-11.10 shall comply with Type B15, for rooms fitted with pressurized sprinkler systems B0. Partitions between cabins and saunas shall comply with Type A0, for rooms fitted with pressurised sprinkler systems − B15.

[6] Partitions between engine rooms according to 15-7 and 9-2.16.4 (ii), shall comply with Type A60; in other cases, they shall comply with Type A0.

Table for partitions between rooms,
in which pressurized sprinkler systems according to 10-3.6 are installed

Rooms	*Control centres*	*Stairwells*	*Muster areas*	*Lounges*	*Engine rooms*	*Galleys*	*Store rooms*
Control centres	-	A0	A0/B15[5]	A0	A60	A30	A0/A30[7]
Stairwells		-	A0	A0	A60	A30	A0
Muster areas			-	A30/B15[6]	A60	A30	A0/A30[9]
Lounges				B15/B0[7]	A60	A30	A0
Engine rooms					A60/A0[8]	A60	A60
Galleys						-	A0/B15[8]
Store rooms							-

(i) Type "A" partitions are bulkheads, walls and decks which satisfy the following requirements:

- They are made of steel or of another equivalent material.
- They are appropriately stiffened.
- They are insulated with an approved non-combustible material such that the average temperature on the side facing away from the fire rises to not more than 140 °C above the initial temperature and at no point, including the gaps at the joints, does a temperature increase of more than 180 °C above the initial temperature occur within the following specified periods:

  Type A60 60 minutes

  Type A30 30 minutes

  Type A0 0 minutes

- They are constructed in such a way as to prevent the transmission of smoke and flames until the end of the one-hour normal fire test;

(ii) Type-B partitions are bulkheads, walls, decks and ceilings together with facings that meet the following requirements:

- They are made of an approved non-combustible material. Furthermore, all materials used in the manufacture and assembly of partitions shall be non-combustible, except for the facing, which shall be at least flame-retardant.
- They demonstrate an insulation value such that the average temperature on the side facing away from the fire rises to not more than 140° C above the initial temperature and at no point, including the gaps at the joints,

[7] Partitions between store rooms for the storage of flammable liquids and control centres and muster areas shall comply with Type A60, for rooms fitted with pressurised sprinkler systems – A30.

[8] B15 is sufficient for the partitions between galleys and cold-storage rooms or food storage rooms.

does a temperature increase of more than 225 ºC above the initial temperature occur within the following specified periods:

Type B15 15 minutes

Type B0 0 minutes

- They are constructed in such a way as to prevent the transmission of flames until the end of the first half hour of the normal fire test;

(iii) The Administration can prescribe a test on a sample partition in order to ensure compliance with the above provisions.

15-11.3 Paints, lacquers and other surface-treatment products as deck coverings used in rooms except engine rooms and store rooms shall be flame-retardant. Carpets, fabrics, curtains and other hanging textile materials as well as upholstered furniture and components of bedding shall be flame-retardant if the rooms in which they are located are not equipped with a pressurized sprinkler system according to 10-3.6.

15-11.4 Lounge ceilings and wall claddings, including their substructures, shall, where these lounges do not have a pressurized sprinkler system according to 10-3.6 be manufactured from non-combustible materials with the exception of their surfaces, which shall be at least flame-retardant. The first sentence shall not apply to saunas.

15-11.5 Furniture and fittings in lounges which serve as muster areas shall, where the rooms do not have a pressurized sprinkler system according to 10-3.6, be manufactured from non-combustible materials.

15-11.6 Paints, lacquers and other materials used on exposed internal areas shall not produce excessive amounts of smoke or toxic substances. This shall be proven on the basis of appropriate test methods recognized by the Administration.

15-11.7 Insulation materials in lounges shall be non-combustible. This does not apply to insulations used on coolant-carrying pipes. The surfaces of the insulation materials used on these pipes shall be at least flame-retardant.

15-11.8 Awnings and similar mobile installations with which deck areas are fully or partially enclosed and their substructures shall be at least flame-retardant**.**

15-11.9 Doors in partitions according to 15-11.2 shall satisfy the following requirements:

(i) They shall satisfy the same requirements set out in 15-11.2 as the partitions themselves;

(ii) They shall be self-closing in the case of doors in partition walls according to 15-11.11 or in the case of enclosures around engine rooms, galleys and stairwells;

(iii) Self-closing doors which remain open in normal operation shall be such that they can be closed from a location permanently manned by the ship’s personnel. Once a door has been remotely closed, it shall be possible to reopen and close it safely on the spot;

(iv) Watertight doors according to 15-2 need not be insulated.

15-11.10 Walls according to 15-11.2 shall be continuous from deck to deck or end at continuous ceilings, which satisfy the same requirements as referred to in 15-11.2.

15-11.11 The following passenger areas shall be divided by vertical partitions as referred to in 15-11.2:

(i) Passenger areas with a total surface area of more than 800 m^2;

(ii) Passenger areas in which there are cabins, at intervals of not more than 40 m.

The vertical partitions shall be smoke-tight under normal operating conditions and shall be continuous from deck to deck.

15-11.12 Hollows above ceilings, beneath floors and behind wall claddings shall be separated at intervals of not more than 14 m by non-combustible draught stops which, even in the event of fire, provide an effective fireproof seal.

15-11.13 Stairs shall be made of steel or another equivalent non-combustible material.

15-11.14 Internal stairs and lifts shall be encapsulated at all levels by walls according to 15-11.2. The following exceptions are permissible:

(i) A staircase connecting only two decks does not need to be encapsulated, if on one of the decks the staircase is enclosed according to 15-11.2;

(ii) In a lounge, stairs need not be encapsulated if they are located entirely within the interior of this room, and

- If this room extends over only two decks, or
- If there is a pressurized sprinkler system according to 10-3.6 installed in this room on all decks, this room has a smoke extraction system according to 15-11.17 and the room has access on all decks to a stairwell.

15-11.15 Ventilation systems and air supply systems shall satisfy the following requirements:

(i) They shall be designed in such a way as to ensure that they themselves do not cause the spread of fire and smoke;

(ii) Openings for air intake and extraction and air supply systems shall be such that they can be closed off;

(iii) Ventilation ducts shall be made of steel or an equivalent non-combustible material and be securely connected to each other and to the superstructure of the vessel;

(iv) When ventilation ducts with a cross-section of more than 0.02 m^2 are passed through partitions according to 15-11.2 of Type A or partitions according to 15-11.11, they shall be fitted with automatic fire dampers which can be operated from a location permanently manned by shipboard personnel or crew members;

(v) Ventilation systems for galleys and engine rooms shall be separated from ventilation systems which supply other areas;

(vi) Air extraction ducts shall be provided with lockable openings for inspection and cleaning. These openings shall be located close to the fire dampers;

(vii) Built-in ventilators shall be such that they can be switched off from a central location outside the engine room.

15-11.16 Galleys shall be fitted with ventilation systems and stoves with extractors. The air extraction ducts of the extractors shall satisfy the requirements according to 15-11.15 and, additionally, be fitted with manually operated fire dampers at the inlet openings.

15-11.17 Control centres, stairwells and internal evacuation areas shall be fitted with natural or mechanical smoke extraction systems. Smoke extraction systems shall satisfy the following requirements:

(i) They shall offer sufficient capacity and reliability;

(ii) They shall comply with the operating conditions for passenger vessels;

(iii) If smoke extraction systems also serve as general ventilators for the rooms, this shall not hinder their function as smoke extraction systems in the event of a fire;

(iv) Smoke extraction systems shall have a manually operated triggering device;

(v) Mechanical smoke extraction systems shall additionally be such that they can be operated from a location permanently manned by shipboard personnel or crew members;

(vi) Natural smoke extraction systems shall be fitted with an opening mechanism, operated either manually or by a power source inside the extraction system;

(vii) Manually operated triggering devices and opening mechanisms shall be accessible from inside or outside the room being protected.

15-11.18 Lounges not constantly supervised by shipboard personnel or crew members, galleys, engine rooms and other rooms presenting a fire risk shall be connected to an appropriate fire alarm system. The existence of a fire and its exact whereabouts shall be automatically displayed at a location permanently manned by shipboard personnel or crew members.

15-12 FIRE-FIGHTING

15-12.1 In addition to the portable extinguishers according to 10-3.1, at least the following portable extinguishers shall be available on board:

(i) One extinguisher for every 120 m^2 of gross floor area in passenger areas;

(ii) One portable extinguisher per group of 10 cabins, rounded upwards;

(iii) One portable extinguisher in each galley and in the vicinity of any room in which flammable liquids are stored or used. In galleys the extinguishing agent shall be suitable for fighting fat fires.

These additional fire extinguishers shall meet the requirements laid down in 10-3.2 and be installed and distributed on the vessel so that, in the event of a fire starting at any point and at any time, a fire extinguisher can be reached immediately. In every galley and also in hairdressing salons and perfumeries, there shall be a fire blanket to hand.

15-12.2 Passenger vessels shall be provided with a hydrant system referred to in 10-3.7, consisting of:

(i) Two motor-driven fire extinguishing pumps of sufficient capacity, at least one of which is permanently installed;

(ii) One fire extinguisher line with a sufficient number of hydrants with permanently connected fire hoses at least 20 m in length and fitted with a standard nozzle capable of producing both a mist and a jet of water and incorporating a shut-off facility.

15-12.3 Hydrant systems shall be designed and dimensioned in such a way that:

(i) Any point of the vessel can be reached from at least two hydrants in different places, each with a single hose length of not more than 20 m;

(ii) The pressure at the hydrants is at least 300 kPa, and

(iii) On all decks a water jet length of at least 6 m can be attained.

If a hydrant chest is provided, an “extinguisher hose” symbol similar to that shown in sketch 5 in appendix 3, of at least 10 cm side length, shall be affixed to the outside of the chest.

15-12.4 Hydrant valves or cocks shall be such that they can be set so that each of the fire hoses can be separated and removed during operation of the fire extinguishing pumps.

15-12.5 Fire hoses in the internal area shall be rolled up on an axially connected reel.

15-12.6 Materials for fire-fighting equipment shall either be heat-resistant or shall be suitably protected against failure to work when subjected to high temperatures.

15-12.7 Pipes and hydrants shall be arranged in such a way that the possibility of freezing is avoided.

15-12.8 The fire extinguishing pumps shall:

(i) Not be installed or housed in the same room;

(ii) Be such that they can be operated independently of each other;

(iii) Each be capable, on all decks, of maintaining the necessary pressure at the hydrants and achieving the requisite length of water jet;

(iv) Be installed forward of the aft bulkhead.

Fire extinguishing pumps may also be used for general purposes.

15-12.9 Engine rooms shall be fitted with a fixed fire extinguishing system according to 10-3.6.

15-12.10 On cabin vessels there shall be:

(i) Two self-contained breathing apparatus sets with full-face masks corresponding to international regulations and standards;

(ii) Two sets of equipment consisting of at least a protective suit, helmet, boots, gloves, axe, crowbar, torch and safety-line; and

(iii) Four smoke hoods.

15-12A WASTE WATER COLLECTION AND DISPOSAL FACILITIES

15-12A.1 Passenger vessels shall be equipped with collection tanks for domestic waste water in accordance with the section 8B-3 or appropriate equipment for the treatment of domestic water in accordance with the section 8B-4.

15-12A.2 It shall be possible to pass waste water from other vessels through.

15-13 SAFETY ORGANISATION

15-13.1 A safety rota shall be provided on board passenger vessels. The safety rota describes the duties of the crew and the shipboard personnel in the following eventualities:

(i) Breakdown;

(ii) Fire on board;

(iii) Evacuation of passengers;

(iv) Person overboard.

Specific safety measures for persons with reduced mobility shall be taken into consideration.

The crew members and shipboard personnel designated in the safety rota should be assigned their various duties, depending on the posts they occupy. Special instructions to the crew shall ensure that, in the event of danger, all doors and openings in the watertight bulkheads referred to in 15-2 shall be closed immediately.

15-13.2 The safety rota includes a safety plan, in which at least the following are clearly and precisely designated:

(i) Areas intended for use by persons with reduced mobility;

(ii) Escape routes, emergency exits and muster and evacuation areas as referred to in 15-6.8;

(iii) Life-saving appliances and ship's boats;

(iv) Fire extinguishers, fire hydrants and hoses and fire extinguishing systems;

(v) Other safety equipment;

(vi) The alarm system referred to in 15-8.3 (i);

(vii) The alarm system referred to in 15-8.3 (ii) and (iii);

(viii) The bulkhead doors referred to in 15-2.5 and the location of their controls, as well as the other openings referred to in 15-2.9, 15-2.10 and 15-2.13 and 15-3.12;

(ix) Doors pursuant to 15-11.9;

(x) Fire dampers;

(xi) Fire alarm system;

(xii) Emergency power plant;

(xiii) Ventilation system control units;

(xiv) Shore connections;

(xv) Fuel line shut-offs;

(xvi) Liquefied gas installations;

(xvii) Public address systems;

(xviii) Radiotelephone equipment;

(xix) First-aid kits.

15-13.3 The safety rota according to 15-13.1 and the safety plan according to 15-13.2 shall:

(i) Be duly stamped by the Administration; and

(ii) Be prominently displayed at an appropriate point on each deck.

15-13.4 Code of conduct for passengers shall be posted up in each cabin and also a simplified safety plan containing only the information referred to in 15-13.2 (i) to (vi).

This code of conduct shall include at least:

(i) Designation of emergencies

- Fire
- Flooding
- General hazard

(ii) Description of various alarm signals

(iii) Instructions concerning the following:

- Escape routes
- What to do
- Need to keep calm

(iv) Instructions concerning the following:

- Smoking
- Use of fire and open flames
- Opening windows
- Use of certain items of equipment.

This information shall be prominently displayed in appropriate languages.

15-14 EXEMPTIONS FOR CERTAIN PASSENGER VESSEL

15-14.1 Passenger vessels authorized to carry up to a maximum of 50 passengers and with a length L_{WL} of not more than 25 m, authorised to carry up to a maximum of 50 passengers shall prove adequate stability after damage according to paragraphs 15-3.7 to 15-3.13 or, as an alternative, prove that they comply with the following criteria after symmetrical flooding:

(i) The immersion of the vessel shall not exceed the margin line; and

(ii) The metacentric height GM_R shall not be less than 0.10 m.

The necessary residual buoyancy shall be assured through the appropriate choice of material used for the construction of the hull or by means of highly cellular foam floats, solidly attached to the hull. In the case of vessels with a length of more than

15 m, residual buoyancy can be ensured by a combination of floats and subdivision complying with the 1-compartment status according to 15-3.9.

15-14.2 If a vessel benefits from the derogations under 15-14.1, the equipment carried on board shall include — in addition to the life-saving equipment mentioned in 15-9.1 to 15-9.3 — collective life-saving equipment according to 10-5.1, in respect of 50% of the maximum number of permitted passengers.

15-14.3 Where appropriate, the Administration may waive the application of 10-5.1.4 in the case of passenger vessels intended to carry a maximum number of 250 passengers and with a length L_{WL} of not more than 25 m, provided that they are equipped with a suitable installation to enable persons to be recovered safely from the water. Such installations shall be subject to the following conditions:

(i) One person alone shall be able to operate the installation;

(ii) Mobile installations are allowed;

(iii) The installations shall be outside the danger area of the propulsion systems; and

(iv) Effective communication shall be possible between the boatmaster and the person in charge of the installation.

15-14.4 The Administration may waive the application of 10-5.1.4 in the case of passenger vessels certificated to carry a maximum number of 600 passengers and with a length of not more than 45 m, provided that the passenger vessel is equipped with a suitable installation as in 15-14.3 and the vessel has:

(i) A rudder propeller, a cycloidal propeller or a water jet as main propulsion; or

(ii) A main propulsion system with 2 propulsion units; or

(iii) A main propulsion system and a bow-thruster.

15-14.5 By way of derogation from 15-2.9, passenger vessels with a length not exceeding 45 m and permitted to carry at most a number of passengers corresponding to the length of the vessel in metres are allowed to have on board, in the passenger area, a manually controlled bulkhead door without remote control according to 15-2.5, if:

(i) The vessel has only one deck;

(ii) This door is accessible directly from the deck and is not more than 10 m away from the exit to the deck;

(iii) The lower edge of the door opening lies at least 30 cm above the floor of the passenger area; and

(iv) Each of the compartments divided by the door is fitted with a bilge level alarm.

15-14.5A On passenger vessels in accordance with 15-14.5, by way of derogation from 15-6.6 (iii), one escape route may lead through a galley, as long as there is a second escape route available.

15-14.6 The provision of 15-1.2 (v) does not apply to passenger vessels with a length not exceeding 45 m when the liquefied gas installations are fitted with appropriate alarm systems for CO concentrations posing a health risk and for potentially explosive mixtures of gas and air.

15-14.7 The following provisions do not apply to passenger vessels with a length L_{WL} not exceeding 25 m:

(i) 15-4.1 last sentence;

(ii) 15-6.6 (iii), for the galleys, as long as a second escape route is available;

(iii) 15-7.

15-14.8 For cabin vessels with a length of not more than 45 m 15-12.10 shall not be applied, provided smoke-hoods in a number corresponding to the number of berths are readily accessible in each cabin.

15-14.9 In addition to 1-1.8 the Administration may permit derogations for passenger vessels on its own territory without the restrictions in that section for the following:

(i) 15-3.9, two-compartment status;

(ii) 15-7, second independent propulsion system; and

(iii) 15-11.17, smoke extraction systems.

15-14.10 For passenger vessels in accordance with 15-14.1 the competent authority may permit minor derogations from the clear height required in 15-6.3 (iii) and 15-6.5 (ii). The derogation shall not be more than 5%. In the case of derogations the relevant parts shall be indicated by colour."

VIII. Chapter 15A

10. *Add* a new Chapter 15A:

"CHAPTER 15A

SPECIFIC REQUIREMENTS FOR SAILING PASSENGER VESSELS

15A-1 APPLICATION OF CHAPTER 3 TO CHAPTER 23

In addition to the provisions of chapter 3 to chapter 23, the requirements in this chapter shall apply to passenger sailing vessels.

15A-2 EXCEPTIONS FOR CERTAIN PASSENGER SAILING VESSELS

15A-2.1 For passenger sailing vessels having an L_{WL} not exceeding 45 m and a maximum permissible number of passengers not exceeding L_{WL} in whole meters, the following provisions shall not apply:

(i) Paragraph 3-6.1 provided that anchors are not transported in hawse pipes;

(ii) Paragraph 10-2.1, fifth bullet, with regard to length;

(iii) Paragraph 15-8.3(i);

(iv) Paragraph 15-14.6.

15A-2.2 By way of derogation from paragraph 15A-2.1, the number of passengers may be raised to 1,5 times the L_{WL} in whole meters, if sails, rigging and deck fittings so permit.

15A-3 STABILITY REQUIREMENTS FOR VESSELS UNDER SAIL

15A-3.1 For the calculation of the heeling moment according to paragraph 15-3.3, the furled sails shall be taken into account when determining the centre of gravity of the vessel.

15A-3.2 Taking into consideration all load conditions according to paragraph 15-3.2, and using a standard arrangement of sails, the heeling moment caused by wind pressure shall not be so high as to exceed a heeling angle of 20°. At the same time

(i) a constant wind pressure of 0.07 kN/m^2 shall be applied for the calculation,

(ii) the residual safety clearance shall be at least 100 mm, and

(iii) the residual freeboard shall not be negative.

15A-3.3 The righting lever of static stability shall

(i) reach its maximum value at a heeling angle of 25° or over,

(ii) amount to at least 200 mm at a heeling angle of 30° or over,

(iii) be positive at a heeling angle of up to 60°.

15A-3.4 The area under the righting lever curve shall not be less than

(i) 0.055 mrad up to 30°;

(ii) 0.09 mrad up to 40° or at the angle at which an unprotected opening reaches the water surface and which is less than 40°.

Between

(iii) 30° and 40°, or

(iv) 30° and the angle at which an unprotected opening reaches the water surface and which is less than 40°,

this area shall not be less than 0.03 mrad.

15A-4 SHIPBUILDING AND MECHANICAL REQUIREMENTS

15A-4.1 By way of derogation from paragraphs 6-1.3, and 9-1.1.2, the equipment must be designed for permanent lists of up to 20°.

15A-4.2 By way of derogation from paragraphs 15-6.5(i) and 15-6.9(ii), the competent authority may, in the case of passenger sailing vessels not more than 25 m long, authorise a clear width of less than 800 mm for connecting corridors and companionways. However, the clear width shall be at least 600 mm.

15A-4.3 By way of derogation from paragraph 15-6.11(i), the competent authority may, in specific cases, authorise the use of removable guard rails in areas where this is necessary for controlling the sails.

15A-4.4 Within the meaning of section 15-7, sails rank as a main propulsion system.

15A-4.5 By way of derogation from paragraph 15-14.5(iii), the height of the lower edge of the door opening may be reduced to 20 cm above the floor of the passenger area. Once opened, the door shall close and lock automatically.

15A-4.6 If there is a possibility of the propeller idling while the vessel is under sail, any endangered parts of the propulsion system shall be protected against potential damage.

15A-5 RIGGING IN GENERAL

15A-5.1 The parts of the rigging shall be arranged in such a way as to prevent unacceptable chafing.

15A-5.2 If a material other than wood is used or if special types of rigging are used, such a design shall guarantee equivalent levels of safety with the dimensions and strength values laid down in this chapter. As evidence of the strength

(i) a strength calculation shall be carried out, or

(ii) confirmation of sufficient strength shall have been obtained from an approved classification society, or

(iii) dimensioning shall be based on the procedures set out in a recognised regulatory framework (e.g. Middendorf, Kusk-Jensen).

The evidence shall be presented to the competent authority.

15A-6 MASTS AND SPARS IN GENERAL

15A-6.1 All spars shall be made of high-quality material.

15A-6.2 Wood for masts shall:

(i) be free of knot concentrations;

(ii) be free of sapwood within the required dimensions;

(iii) as far as possible be straight-grained;

(iv) contain as little as possible twisted growth.

15A-6.3 If the chosen timber is either pitch pine or Oregon pine of quality level “clear and better” the diameters in the tables reproduced in sections 15A-7 to 15A-12 can be reduced by 5%.

15A-6.4 If the timbers used for masts, topmasts, yardarms, booms and bowsprits are not round in cross-section, such timbers must be of equivalent strength.

15A-6.5 Mast pedestals, mast trunks and fastenings on deck, on floor-plates and on stem or stern shall be constructed in such a way that they can either absorb the forces they are subjected to or transfer them to other connected parts of the structure.

15A-6.6 Depending on the stability of the vessel and the external forces it is subjected to and also the distribution of the available sail area, the competent authority may, on the basis of the dimensions laid down in sections 15A-7 to 15A-12, allow reductions in the cross-sections of the spars and, where appropriate, of the rigging. Evidence shall be submitted in accordance with paragraph 15A-5.2.

15A-6.7 If the vessel's period of oscillation/period of roll, in seconds, is less than three quarters of its breadth, in metres, the dimensions set out in sections 15A-7 to 15A-12 shall be increased. Evidence shall be submitted in accordance with paragraph 15A-5.2.

15A-6.8 In the tables reproduced in sections 15A-7 to 15A-12 and 15A-14, possible intermediate values shall be interpolated.

15A-7 SPECIAL PROVISIONS FOR MASTS

15A-7.1 Wooden masts shall meet the following minimum requirements:

Length[9] *(m)*	*Diameter on deck (cm)*	*Diameter on the cross-tree (cm)*	*Diameter on the mast cap (cm)*
10	20	17	15
11	22	17	15
12	24	19	17
13	26	21	18
14	28	23	19
15	30	25	21
16	32	26	22
17	34	28	23
18	36	29	24
19	39	31	25
20	41	33	26
21	43	34	28
22	44	35	29
23	46	37	30
24	49	39	32
25	51	41	33

If a mast has two yards, the diameters shall be increased by at least 10%.

If a mast has more than two yards, the diameters shall be increased by at least 15%.

In the case of masts fitted through the deck, the diameter at the mast foot shall be at least 75% of the diameter of the mast at deck level.

15A-7.2 Mast fittings, mast bands, cross-trees and mast caps shall be sufficiently strongly dimensioned and attached.

15A-8 SPECIAL PROVISIONS FOR TOPMASTS

15A-8.1 Wooden topmasts shall meet the following minimum requirements:

Length[10] *(m)*	*Diameter at the foot (cm)*	*Half-length diameter (cm)*	*Diameter at fitting*[11] *(cm)*
4	8	7	6
5	10	9	7
6	13	11	8
7	14	13	10
8	16	15	11
9	18	16	13

[9] Distance from the cross-tree to the deck.
[10] Total length of the topmast, without the masthead.
[11] Diameter of the topmast at the level of the masthead fitting.

Length[10] *(m)*	*Diameter at the foot (cm)*	*Half-length diameter (cm)*	*Diameter at fitting*[11] *(cm)*
10	20	18	15
11	23	20	16
12	25	22	17
13	26	24	18
14	28	25	20
15	31	27	21

If square sails are attached to a topmast, the dimensions set out in the table shall be increased by 10%.

15A-8.2 The overlap between the topmast and the mast shall be at least 10 times the required foot diameter of the topmast.

15A-9 SPECIAL PROVISIONS FOR BOWSPRITS

15A-9.1 Wooden bowsprits shall meet the following minimum requirements:

Length[12] *(m)*	*Diameter at stem (cm)*	*Half-length diameter (cm)*
4	14,5	12,5
5	18	16
6	22	19
7	25	23
8	29	25
9	32	29
10	36	32
11	39	35
12	43	39

15A-9.2 The inboard section of the bowsprit shall have a length of at least four times the diameter of the bowsprit at the stem.

15A-9.3 The diameter of the bowsprit at its head shall be at least 60% of the diameter of the bowsprit at the stem.

15A-10 SPECIAL PROVISIONS FOR JIB-BOOMS

15A-10.1 Wooden jib-booms shall meet the following minimum requirements:

Length[13] *(m)*	2	3	4	5	6	7	8	9	10
Diameter at the stem (cm)	7	10	14	17	21	24	28	31	35

15A-10.2 The diameter of the jib-boom at its head shall be at least 60% of the diameter at the stem.

[12] Total length of the bowsprit.
[13] Total length of the jib-boom.

15A-11 SPECIAL PROVISIONS FOR MAIN BOOMS

15A-11.1 Wooden main booms shall meet the following minimum requirements:

Length[14] *(m)*	5	6	7	8	9	10	11	12	13	14	15	16
Diameter (cm)	14	15	16	17	18	20	21	23	24	25	26	27

15A-11.2 The diameter at the swivel pin shall be at least 72% of the diameter specified in the table.

15A-11.3 The diameter at the clew shall be at least 85% of the diameter specified in the table.

15A-11.4 Measured from the mast, the greatest diameter shall be at two thirds of the length.

15A-11.5 Where:

(i) there is an angle of less than 65° between the main boom and the after leech and the main sheet is attached to the end of the boom, or

(ii) the attachment point of the sheet is not abreast of the clew,

the competent authority may, according to paragraph 15A-5.2, require a greater diameter.

15A-11.6 For sail areas of less than 50 m^2, the competent authority may authorise reductions in the dimensions set out in the table.

15A-12 SPECIAL PROVISIONS FOR GAFFS

15A-12.1 Wooden gaffs shall meet the following minimum requirements:

Length[15] *(m)*	4	5	6	7	8	9	10
Diameter (cm)	10	12	14	16	17	18	20

15A-12.2 The unsupported length of the gaff shall be not more than 75%.

15A-12.3 The breaking strength of the crowfoot shall be at least equal to 1,2 times the breaking strength of the peak halyard.

15A-12.4 The top angle of the crowfoot shall be a maximum of 60°.

15A-12.5 If, by way of derogation from paragraph ~~4~~ 15A-12.4, the top angle of the crowfoot is greater than 60°, the tensile strength shall be adjusted to accommodate the forces that will then occur.

15A-12.6 For sail areas of less than 50 m^2, the competent authority may authorise reductions in the dimensions set out in the table.

15A-13 GENERAL PROVISIONS FOR STANDING AND RUNNING RIGGING

15A-13.1 Standing and running rigging shall comply with the strength requirements set out in sections 15A-14 and 15A-15.

[14] Total length of the main boom.
[15] Total length of the gaff.

15A-13.2 Wire cable connections may take the form of:

(i) splicings,

(ii) compression sleeves, or

(iii) sealing sleeves.

Splicings shall be marled and ends shall be whipped.

15A-13.3 Eye splices shall be provided with thimbles.

15A-13.4 Ropes shall be routed in such a way as not to obstruct entrances and companionways.

15A-14 SPECIAL PROVISIONS FOR STANDING RIGGING

15A-14.1 Forestays and shrouds shall meet the following minimum requirements:

Mast length[16] *(m)*	*11*	*12*	*13*	*14*	*15*	*16*	*17*	*18*
Tensile strength of the forestay (kN)	160	172	185	200	220	244	269	294
Tensile strength of the shrouds (kN)	355	415	450	485	525	540	630	720
Number of shroud cables and ropes per side	3	3	3	3	3	3	4	4

15A-14.2 Backstays, topmasts, flying jib-stays, jib-booms and bowsprit shrouds shall meet the following minimum requirements:

Mast length[17] *(m)*	*<13*	*13-18*	*>18*
Tensile strength of the backstay (kN)	89	119	159
Tensile strength of the topmast (kN)	89	119	159
Length of topmast (m)	< 6	6-8	> 8
Tensile strength of the flying jib-stay (kN)	58	89	119
Length of jib-boom (m)	< 5	5-7	> 7
Tensile strength of the bow sprit shrouds (kN)	58	89	119

15A-14.3 The preferred rope design shall be based on Rope Construction Method 6 × 7 FE in the strength class 1550 N/mm^2. Alternatively, at the same strength class, Construction Method 6 × 36 SE or 6 × 19 FE may be used. Because of the higher elasticity of Construction Method 6 × 19, the tensile strengths given in the table shall be increased by 10%. Use of a different rope design shall be permitted provided it has comparable properties.

15A-14.4 If rigid rigging is used, the tensile strengths shown in the table shall be increased by 30%.

15A-14.5 For rigging, only approved forks, round eyes and bolts may be used.

15A-14.6 Bolts, forks, round eyes and turnbuckles shall be capable of being properly secured.

15A-14.7 The tensile strength of the bobstay shall be at least 1,2 times the tensile strength of the respective jib-stay and flying jib-stay.

[16] Distance from the top or cross-tree to the deck.

[17] Distance from the top or cross-tree to the deck.

15A-14.8 For vessels with less than 30 m^3 water displacement, the competent authority may permit the reductions in tensile strengths shown in the table set out below:

Water displacement divided by the number of masts (m^3)	*Reduction (%)*
> 20 to 30	20
10 to 20	35
< 10	60

15A-15 SPECIAL PROVISIONS FOR RUNNING RIGGING

15A-15.1 For running rigging, fibre ropes or steel wire ropes shall be used. The minimum tensile strength and the diameter for running rigging shall, in relation to the sail area, meet the following minimum requirements:

Type of running rigging	*Rope material*	*Sail area (m^2)*	*Minimum tensile strength (kN)*	*Diameter of rope (mm)*
Staysail halyards	Steel wire	up to 35	20	6
		> 35	38	8
	Fibre (polypropylene-PP)	Rope diameter of at least 14 mm and one rope sheave for every 25 m^2 or part thereof		
Gaff sail halyards Top sail halyards	Steel wire	up to 50	20	6
		> 50 to 80	30	8
		> 80 to 120	60	10
		>120 to 160	80	12
	Fibre (PP)	Rope diameter of at least 18 mm and one rope sheave for every 30 m^2 or part thereof		
Staysail sheets	Fibre (PP)	up to 40	14	
		> 40	18	
	For sail areas of more than 30 m^2, the sheet shall take the form of a tackle or shall be capable of being operated by a winch			
Gaff-/Top-sail sheets	Steel wire	< 100	60	10
		100 to 150	85	12
		> 150	116	14
		For top sail sheets, elastic connection elements (fore runners) are necessary.		
	Fibre (PP)	Rope diameter of at least 18 mm and at least three rope sheaves. Where the sail area is greater than 60 m^2, one rope sheave per 20 m^2		

15A-15.2 Running rigging forming part of the staying shall have a tensile strength which corresponds to that of the respective stay or shrouds.

15A-15.3 If materials other than those stated in paragraph 15A-15.1 are used, the strength values given in the table in paragraph 15A-15.1 shall be complied with.

Fibre ropes of polyethylene shall not be used.

15A-16 FITTINGS AND PARTS OF THE RIGGING

15A-16.1 If steel wire ropes or fibre ropes are used, the diameters of the rope sheaves (measured from centre of rope to centre of rope) shall meet the following minimum requirements:

Steel wire (mm)	6	7	8	9	10	11	12
Fibre (mm)	16	18	20	22	24	26	28
Rope sheave (mm)	100	110	120	130	145	155	165

15A-16.2 By way of derogation from paragraph 15A-16.1, the diameter of the rope sheaves may be equal to six times the diameter of the steel wire, provided that the steel wire does not constantly run over sheaves.

15A-16.3 The tensile strength of the fittings (e.g. forks, round eyes, turnbuckles, eye-plates, bolts, rings and shackles) shall be compatible with the tensile strength of the standing or running rigging that is attached to them.

15A-16.4 The fastenings of stay and shroud futtocks shall be designed to take up the forces they are subjected to.

15A-16.5 Only one shackle, along with the relevant stay or shroud, may be attached to each eye.

15A-16.6 Blocks of halyards and topping lifts shall be securely fastened to the mast, and the revolving crowfeet used for this purpose shall be in good condition.

15A-16.7 Attachments of eye-bolts, cleats, belaying pins and fife-rails shall be designed to cope with the forces they are subjected to.

15A-17 SAILS

15A-17.1 It shall be ensured that sails can be taken in simply, swiftly and safely.

15A-17.2 The sail area shall be appropriate for the type of vessel and the water displacement.

15A-18 EQUIPMENT

15A-18.1 Vessels that are fitted with a jib-boom or a bowsprit shall have a jib-net and an adequate number of appropriate holding and tensioning devices.

15A-18.2 The equipment according to paragraph 15A-18.1 may be dispensed with if the jib-boom or bowsprit is equipped with a hand becket and a foot rope adequately dimensioned to allow for the attachment of a safety harness to be carried on board.

15A-18.3 For work on the rigging, a boatswain's chair shall be provided.

15A-19 TESTING

15A-19.1 The rigging shall be tested by the competent authority every 2,5 years. As a minimum, the test shall cover the following:

(i) the sails, including leeches, clews and reef eyes;

(ii) the state of the masts and spars;

(iii) the state of the standing and running rigging together with cable wire connections;

(iv) facilities for taking in the sail swiftly and safely;

(v) the secure fastening of blocks of halyards and topping lifts;

(vi) the fastening of mast trunks and other fastening points for standing and running rigging that are attached to the vessel;

(vii) the winches for operating the sails;

(viii) other facilities fitted for the purposes of sailing, such as lee-boards and the fittings for operating them;

(ix) the measures taken to prevent the chafing of the spars, the running and standing rigging and the sails;

(x) the equipment according to section 15A-18.

15A-19.2 That part of the wooden mast passing through the deck and located below the deck shall be re-examined at intervals to be determined by the competent authority, but at the very least on the occasion of each periodical inspection according to section 2-4. The mast shall be extracted for this purpose.

15A-19.3 A certificate of the last inspection carried out in accordance with paragraph 15A-19.1 and issued, dated and signed by the competent authority, shall be carried on board."

IX. Chapter 22A

11. *Add* a new Chapter 22A:

"CHAPTER 22A

SPECIFIC REQUIREMENTS APPLICABLE TO CRAFT LONGER THAN 110 M

22A-1 APPLICATION OF CHAPTER 2

22A-1.1 In addition to the requirements set out in section 2-6, the competent authority which is subsequently to issue the ship's certificate shall be informed by the owner or his representative before building of craft longer than 110 m, except sea-going ships, begins (building of a new vessel or extension of a vessel already in service). That authority shall conduct inspections during the building stage. It may dispense with inspections during the building stage if a certificate is produced before building begins to show that an approved classification society declares that it is to supervise that building.

22A-2 APPLICATION OF CHAPTER 3 TO CHAPTER 23

22A-2.1 In addition to chapter 3 to chapter 23, the sections 22A-3 to 22A-5 shall apply to craft that are longer than 110 m.

22A-3 STRENGTH

22A-3.1 Sufficient hull strength in accordance with paragraph 3-1.1 (longitudinal, lateral and local strength) shall be verified by a certificate issued by an approved classification society.

22A-4 BUOYANCY AND STABILITY

22A-4.1 Paragraphs 22A-4.2 to 22A-4.10 shall apply to craft that are longer than 110 m, with the exception of passenger vessels.

22A-4.2 The basic values for the stability calculation, the vessel's lightweight and the location of the centre of gravity shall be determined by means of an inclining experiment carried out in accordance with Annex I to IMO Resolution MSC 267 (85).

22A-4.3 The applicant shall prove, by means of a calculation based on the method of lost buoyancy, that the buoyancy and stability of the vessel are appropriate in the event of flooding. All calculations shall be carried out with free sinkage, heel and trim.

Sufficient buoyancy and stability of the vessel in the event of flooding shall be proven with a cargo corresponding to its maximum draught and evenly distributed among all the holds and with maximum supplies and fully fuelled.

For diversified cargo, the stability calculation shall be performed for the most unfavourable loading condition. This stability calculation shall be carried on board.

For this purpose, mathematical proof of sufficient stability shall be determined for the intermediate stages of flooding (25%, 50% and 75% of flood build up, and, where appropriate, for the stage immediately prior to transverse equilibrium) and for the final stage of flooding, in the loading conditions specified above.

22A-4.4 The following assumptions shall be taken into consideration for the damaged condition:

(i) Extent of side damage:

longitudinal extent: at least 0.10 L,

transverse extent: 0.59 m,

vertical extent: from the bottom upwards without limit.

(ii) Extent of bottom damage:

longitudinal extent: at least 0.10 L,

transverse extent: 3.00 m,

vertical extent: from the base 0.39 m upwards, the sump excepted.

(iii) Any bulkheads within the damaged area shall be assumed damaged, which means that the subdivision shall be chosen so that the vessel remains afloat after the flooding of two or more adjacent compartments[18] in the longitudinal direction. For the main engine room only the one compartment standard need be taken into account, i.e. the end bulkheads of the engine room shall be assumed as not damaged.

For bottom damage, adjacent athwart ship compartments shall also be assumed as flooded.

(iv) Permeability:

Permeability shall be assumed to be 95%.

If a calculation proves that the average permeability of a compartment is less than 95%, the calculated value may be used instead.

[18] The Basin Administration may waive the requirements prescribed in this paragraph with regard to the 2-compartment status.

The values used shall not be less than:

1. engine and operation rooms: 85%

2. cargo holds: 70%

3. double bottoms, fuel tanks, ballast tanks, etc. depending on whether, according to their function, they have to be assumed as full or empty for the vessel floating at the maximum permissible draught: 0 or 95%

(v) The calculation of free surface effect in intermediate stages of flooding shall be based on the gross surface area of the damaged compartments.

22A-4.5 For all intermediate stages of flooding referred to in paragraph 22A-4.3, the following criteria shall be met:

(i) the heeling angle φ at the equilibrium position of the intermediate stage in question shall not exceed 15° (5° where containers are not secured);

(ii) beyond the heel in the equilibrium position of the intermediate stage in question, the positive part of the righting lever curve shall display a righting lever value of GZ ≥ 0.02 m (0.03 m where containers are not secured) before the first unprotected opening becomes immersed or a heeling angle φ of 27° is reached (15° where containers are not secured);

(iii) non-watertight openings shall not be immersed before the heel in the equilibrium position of the intermediate stage in question has been reached.

22A-4.6 During the final stage of flooding, the following criteria shall be met:

(i) the lower edge of non-watertight openings (e.g. doors, windows, access hatches) shall be not less than 0.10 m above the damaged waterline;

(ii) the heeling angle φ at the equilibrium position shall not exceed 12° (5° where containers are not secured);

(iii) beyond the heel in the equilibrium position of the intermediate stage in question, the positive part of the righting lever curve shall display a righting lever value of GZ ≥ 0.05 m and the area under the curve shall reach at least 0.0065 m.rad before the first unprotected opening becomes immersed or a heeling angle φ of 27° (10° where containers are not secured) is reached;

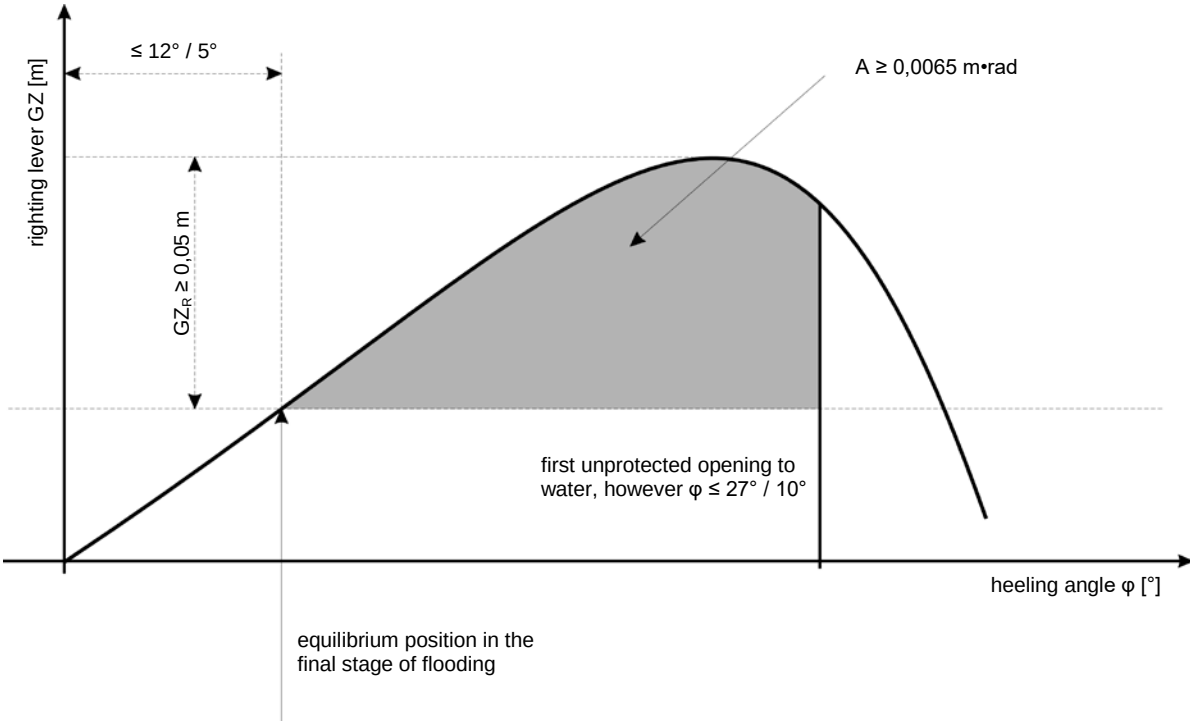

(iv) if non-watertight openings are immersed before the equilibrium position is reached, the rooms affording access shall be deemed flooded for the purposes of the damaged stability calculation.

22A-4.7 If cross-flood openings to reduce asymmetrical flooding are provided, the following conditions shall be met:

(i) for the calculation of cross-flooding, IMO Resolution A.266 (VIII) shall be applied;

(ii) they shall be self-acting;

(iii) they shall not be equipped with shut-off devices;

(iv) the total time allowed for equalisation shall not exceed 15 minutes.

22A-4.8 If openings through which undamaged compartments may additionally become flooded are capable of being closed watertight, the shut-off devices shall bear the following readily legible instruction on both sides:

“Close immediately after passage”.

22A-4.9 The proof by calculation in accordance with paragraphs 22A-4.3 to 22A-4.7 shall be considered to have been provided if damaged stability calculations in accordance with Part 9 of the Regulations annexed to the European Agreement concerning the International Carriage of Dangerous Goods by Inland Waterways (hereinafter referred to as ADN) are produced with a positive result.

22A-4.10 Where necessary in order to meet the requirements in paragraph 22A-4.3 the plane of maximum draught shall be re-established.

22A-5 ADDITIONAL REQUIREMENTS

22A-5.1 Craft longer than 110 m shall:

(i) be fitted with a multi-propeller propulsion system, with at least two independent engines of equal power and a bow thruster that is controlled from the wheelhouse and is also effective when the craft is in an unladen state; or

have a single-propeller propulsion system and a bow thruster that is controlled from the wheelhouse with its own power supply and which is also effective when the craft is in an unladen state and makes it possible for the craft to proceed under its own power in the event of a breakdown of the main propulsion system;

(ii) be fitted with a radar navigation system, together with a rate-of-turn indicator in accordance with paragraph 7-4.1;

(iii) have a permanently-installed bilge pumping system in accordance with section 8-1.6;

(iv) meet the requirements of section 23-9.

22A-5.2 For craft, except passenger ships, with a length of more than 110 m, which in addition to paragraph 22A-5.1

(i) are capable of being separated, in the event of an accident, in the middle third of the vessel without the use of heavy salvage equipment while the separated parts of the vessel shall remain afloat after separation;

(ii) are provided with a certificate that shall be carried on board and which is issued by an approved classification society regarding the buoyancy, trim position and stability of the separate parts of the vessel, indicating the degree of loading above which buoyancy of the two parts is no longer ensured;

(iii) are built as double-hull vessels in accordance with the ADN, where for dry cargo vessels sections 9.1.0.91 to 9.1.0.95, and for tank vessels paragraph 9.3.2.11.7 and sections 9.3.2.13 to 9.3.2.15 or paragraph 9.3.3.11.7 and sections 9.3.3.13 to 9.3.3.15 of Part 9 of the ADN shall apply;

(iv) are fitted with a multi-screw propulsion system in accordance with paragraph 22A-5.1(i), first half sentence;

it shall be entered in item 52 of the ship's certificate that they comply with all the requirements of subparagraphs (i) to (iv).

22A-5.3 For passenger vessels with a length of more than 110 m which in addition to paragraph 22A-5.1

(i) are built or converted for their highest class under the supervision of an approved classification society, in which case compliance shall be confirmed by means of a certificate issued by the classification society while current class is not necessary;

(ii) either

have a double bottom with a height of at least 600 mm and subdivision to ensure that, in the event of flooding of any two adjacent watertight compartments, the vessel does not immerse lower than the margin line and a residual safety clearance of 100 mm remains,

or

have a double bottom with a height of at least 600 mm and a double hull with a distance of at least 800 mm between the side wall of the vessel and the longitudinal bulkhead;

(iii) are fitted with a multi-screw propulsion system with at least two independent engines of equal power and a bow thruster system which can be operated from the wheelhouse and which operates longitudinally as well as transversely;

(iv) allow the stern anchor to be operated directly from the wheelhouse;

it shall be entered in item 52 of the ship's certificate that they comply with all the requirements of points (i) to (iv)."

X. Amendments to Appendix 1

12. *Amend* chapter II, zone 2, "France" *as follows:*

"FRANCE

Gironde, from kilometre point (KP) 402 to the transversal limit of the sea defined by the line joining the Pointe de Grave to the Pointe de Suzac.

Loire, from Cordemais (KP 25) to the transversal limit of the sea defined by the line joining the Pointe de Mindin to the Pointe de Penhoët.

Rhône, downstream from Trinquetaille bridge at Arles and beyond towards Marseilles.

Seine, from the start of the Tancarville Canal to the transversal limit of the sea defined by the line from Cape Hode, on the right bank, to the point, on the left bank, where the planned dyke meets the coast below Berville.

Vilaine, from the Arzal Dam to the transversal limit of the sea defined by the line joining the Pointe du Scal to the Pointe du Moustoir.

Lake Geneva."

13. *Amend* chapter II, zone 2, "Germany" *as follows:*

"GERMANY

Ems, from a line across the river Ems near the entrance to Papenburg harbour between Diemen the former pumping station and the opening of the dyke at Halte as far as a line linking the former Greetsiel lighthouse and the western pier of the port entrance at Eemshaven.

Jade, inside a line linking the former Schillighörn cross light and Langwarden church tower.

Weser, from the north-western edge of the Bremen railway bridge as far as a line linking Langwarden and Cappel church towers with the side branches: Westergate, Rekumer Loch, Rechter Nebenarm and Schweiburg.

Elbe, *Bützflether Süderelbe* (from km 0,69 till the mouth in the Elbe), Ruthenstrom (from km 3,75 till the mouth in the Elbe), Wischhafener Süderelbe (from km 8,03 till the mouth in the Elbe) from the lower limit of the port of Hamburg to a line linking the Döse beacon and the north-western point of the Friedrichskoog dyke

(Dieksand) with the Nebenelben as well as the tributaries: Este, Lühe, Schwinge, Oste, Pinnau, Krückau and Stör (in each case from the barrage to the mouth).

Meldorfer Bucht, inside a line linking the western edge of Friedrichskoog dyke (Dieksand) and Büsum west pier head.

Eider, from the mouth of the Gieselau Canal (km 22,64) to the line between the middle of the fortress (Tränke) and the churchtower of Vollerwiek.

Gieslau Canal, from the mouth in the Eider till the the mouth in the Nord-Ostsee Canal.

Flensburger Förde, inside a line linking Kegnäs lighthouse and Birknack and North from the German-Danish border in the Flensburger Förde.

Schlei, inside a line linking the Schleimünde pier heads.

Eckernförder Bucht, inside a line linking Boknis-Eck to the north-eastern point of the mainland near Dänisch Nienhof.

Kieler Förde, inside a line linking Bülk lighthouse at the Laboe naval memorial.

Nord-Ostsee-Kanal (Kiel Canal including Audorfer See and Schirnauer See), from the line linking the Brunsbüttel pier heads to a line linking the entrance lights of Kiel-Holtenau including Obereidersee with Enge, Audorfer See, Bergstedter See, Schirnauer See, Flemhuder See and Achterwehrer Schiffahrtskanal.

Trave, from the north-western edge of the railway lift bridge in Lübeck with the Pötenitzer Wiek, and the Dassower See as far as a line linking the southern inner and northern outer pier heads at Travemünde.

Leda, from the entrance to the outer harbour of the Leer sea lock to the mouth in the Eems.

Hunte, from Oldenburg harbour and from 140 m downstream of the Amalienbrücke in Oldenburg to the mouth in the Weser.

Lesum, from the confluence of the Hamme and Wümme (km 0,00) to the mouth in the Weser.

Este, from the tail water of Buxtehude lock (km 0,25) to the mouth in the Elbe.

Lühe, from the tail water of the Au-Mühle in Horneburg (km 0,00) to the mouth in the Elbe.

Schwinge, from the north edge of the Salztor lock in Stade to the mouth in the Elbe.

Freiburger Hafenpriel, from the eastern edge of the sluice in Freiburg/Elbe as far as the mouth.

Oste, from 210 m above the middleline of the traffic bridge over the Oste barrage (km 69,360) to the mouth in the Elbe.

Pinnau, from the south-western edge of the railway bridge in Pinneberg to the mouth in the Elbe.

Krückau, from the south-western edge of the bridge leading to/from the Wedenkamp in Elmshorn-to the mouth in the Elbe.

Stör, from the Rensing tide gauge to the mouth in the Elbe.

Freiburger Hafenpriel, from the eastern edge of the sluice in Freiburg an der Elbe as far as the mouth in the Elbe.

Wismarbucht, Kirchsee, Breitling, Salzhaff and Wismar port area, limited seawards by a line: Hohen Wieschendorf Huk and Timmendorf light as well as Gollwitz light on the Island of Poel and the southern point of Wustrow Peninsula.

Warnow, including Breitling and side branches, downstream of the Mühlendamm from the northern edge of the Geinitzbrücke in Rostock towards the sea as far as a line linking the northern points of the western and eastern piers in Warnemünde.

Waters between the mainland and the Darss and Zingst peninsulas as well as the Hiddensee and Rügen islands (including Stralsund port area), limited seawards between:

- the Zingst peninsula and the island of Bock by the parallel of latitude 54°26'42" N;
- the islands of Bock and Hiddensee by a line linking the northern point of the island of Bock and the southern point of the island of Hiddensee;
- the island of Hiddensee and the island of Rügen (Bug) by a line linking the south-eastern point of Neubessin to Buger Haken.

Kleine Jasmunder Bodden.

Greifswalder Bodden and Greifswald port area including the river Ryck, Bodden seawards as far as a line from the eastern point Thiessower Haken (Südperd) to the eastern point of the island of Ruden and continuing to the northern point of the island of Usedom (54° 10'37" N, 13°47'51" E).

Ryck, east from the Steinbecker bridge in Greifswald to the linking line over the heads of the jetties.

Waters enclosed by the mainland and the island of Usedom (Peenestrom including Wolgast port area, Achterwasser, and the Oder Haff), limited in the east by the border between the Federal Republic of Germany and the Republic of Poland in the Stettiner Haff.

Uecker, from the south-west edge of the traffic bridge in the Uekermünde to the linking line over he heads of the jetties."

14. *Amend* chapter III, zone 3, "France" *as follows:*

"FRANCE

Adour, from the Bec du Gave to the sea.

Aulne, from the lock at Châteaulin to the transversal limit of the sea defined by the Passage de Rosnoën.

Blavet, from Pontivy to the Pont du Bonhomme.

Calais Canal.

Charente, from the bridge at Tonnay-Charente to the transverse limit of the sea defined by the line passing through the centre of the downstream light on the left bank and through the centre of the Fort de la Pointe.

Dordogne, from the confluence with the Lidoire to the Bec d'Ambès.

Garonne, from the bridge at Castet en Dorthe to the Bec d'Ambès.

Gironde, from the Bec d'Ambès to the transversal line at KP 48.50 and passing through the downstream point of the Ile de Patiras.

Hérault, from the port of Bessan to the sea, as far as the upper limit of the tidal foreshore.

Isle, from the confluence with the Dronne to the confluence with the Dordogne.

Loire, from the confluence with the Maine to Cordemais (KP 25).

Marne from the bridge at Bonneuil (KP 169bis900) and the lock at St Maur to the confluence with the Seine.

Rhine.

Nive, from the Haïtze dam at Ustaritz to the confluence with the Adour.

Oise, from Janville lock to the confluence with the Seine.

Orb, from Sérignan to the sea, as far as the upper limit of the tidal foreshore.

Rhône, from the frontier with Switzerland to the sea, with the exception of the Petit Rhône.

Saône, from the Pont de Bourgogne bridge at Chalon-sur-Saône to the confluence with the Rhône.

Seine, from the lock at Nogent-sur-Seine to the start of the Tancarville Canal.

Sèvre Niortaise, from the lock at Marans at the transverse limit of the sea opposite the guardhouse to the mouth.

Somme, from the downstream side of the Pont de la Portelette bridge at Abbeville to the viaduct of the Noyelles to Saint-Valéry-sur-Somme railway.

Vilaine, from Redon (KP 89.345) to the Arzal Dam.

Lake Amance.

Lake Annecy.

Lake Biscarosse.

Lake Bourget.

Lake Carcans.

Lake Cazaux.

Lake Der-Chantecoq.

Lake Guerlédan.

Lake Hourtin.

Lake Lacanau.

Lake Orient.

Lake Pareloup.

Lake Parentis.

Lake Sanguinet.

Lake Serre-Ponçon.

Lake Temple.”

15. *Amend* chapter III, zone 3, “Germany” *as follows:*

“GERMANY

Danube, from Kelheim (2,414.72 km) to the German/Austrian border at Jochenstein.

Rhine with Lampertheimer Altrhein (from km 4.75 to the Rhine), Altrhein Stockstadt-Erfelden (from km 9.80 to the Rhine), from the German/Swiss border to the German/Netherlands border.

Elbe (Norderelbe) including Süderelbe en Köhlbrand, from the mouth of the Elbe-Seitenkanal to the lower limit of the port of Hamburg.

Müritz.”

XI. Amendments to Appendix 3

16. *Add* a new sketch 8 as follows:

Sketch 8

Wear life jacket		Colour: blue/white

XII. Amendments to Appendix 7

17. *Add* a new chapter IV. Sound signals *as follows:*

“IV. SOUND SIGNALS

A. Sound intensity of signals

Mechanically-operated sound signalling devices used by inland waterway vessels shall be capable of producing sound signals with the following characteristics:

1. Frequency

(a) For motorized vessels other than the small craft referred to in paragraph (b), the fundamental frequency shall be 200 Hz, with a tolerance of ± 20%;

(b) For non-motorized vessels and small craft the fundamental frequency shall be above 350 Hz;

(c) For the three-tone signals used by vessels navigating by radar under conditions of reduced visibility, the fundamental frequencies of the tones shall be between 165 and 297 Hz, with an interval of at least two full tones between the highest-pitched and the lowest-pitched sound.

2. Sound pressure level

The sound pressure levels given below shall be measured at, or referred to, a point 1 metre in front of the centre of the opening of the horn, the measurement being made, as far as possible, away from any sound reflecting surfaces.

(a) For motorized vessels other than the small craft referred to in paragraph (b), the weighted sound pressure level shall be between 120 and 140 dB (A);

(b) For non-motorized vessels and small craft which are not equipped or used to tow vessels other than small craft, the weighted sound pressure level shall be between 100 and 125 dB (A);

(c) For the three-tone signals used by vessels navigating by radar under conditions of reduced visibility, the weighted sound pressure level of each tone shall be between 120 and 140 dB (A).

B. Monitoring of sound pressure level

The sound pressure level shall be checked by the competent authorities by means of the sonometer standardized by the International Electrotechnical Commission (reference IEC.179) or by means of the ordinary sonometer standardized by IEC (reference IEC.123).”