Empa
Materials Science and Technology

Scarce / critical metals recovery from electrical and electronic devices in passenger vehicles

Patrick Wäger, Arthur Haarman, Amund Løvik,
Sandra Müller, Eliette Restrepo and Rolf Widmer

Technology & Society Laboratory
Lerchenfeldstrasse 5
CH-9014 St. Gallen

patrick.waeger@empa.ch

Outline

- Background
- The EVA project
- Tentative application of UNECE EGRC draft specifications for anthropogenic resources classification
- Outlook

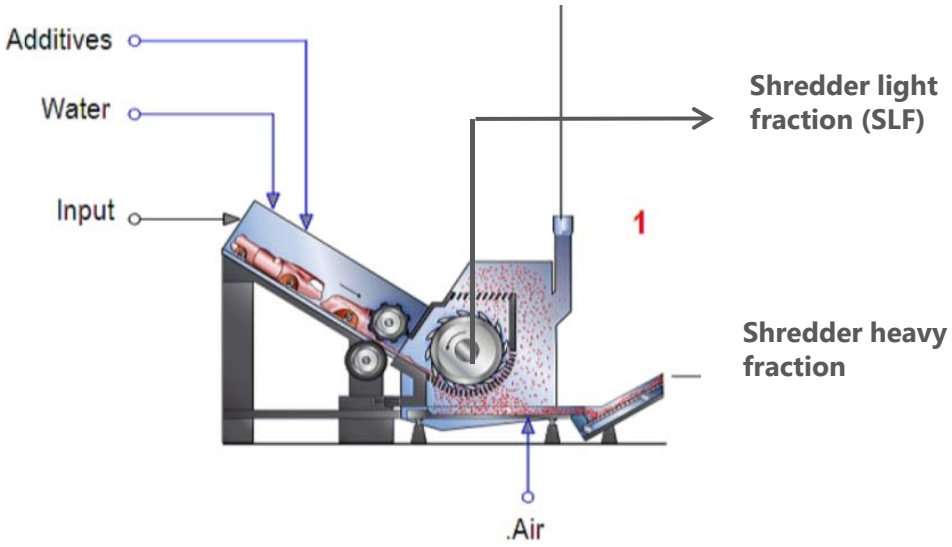

Background

(Geochemically) scarce metals

Empa
Materials Science and Technology

average mass fraction in earth crust : < 0.01%

	Ia	IIa	IIIb	IVb	Vb	VIb	VIIb		VIII		Ib	IIb	IIIa	IVa	Va	VIa	VIIa	VIIIa
1 (K)	1H																	2He
2 (L)	3Li	4Be											5B	6C	7N	8O	9F	10Ne
3 (M)	11Na	12Mg											13Al	14Si	15P	16S	17Cl	18Ar
4 (N)	19K	20Ca	21Sc	22Ti	23V	24Cr	25Mn	26Fe	27Co	28Ni	29Cu	30Zn	31Ga	32Ge	33As	34Se	35Br	36Kr
5 (O)	37Rb	38Sr	39Y	40Zr	41Nb	42Mo	43Tc	44Ru	45Rh	46Pd	47Ag	48Cd	49In	50Sn	51Sb	52Te	53I	54Xe
6 (P)	55Cs	56Ba	57La	72Hf	73Ta	74W	75Re	76Os	77Ir	78Pt	79Au	80Hg	81Tl	82Pb	83Bi	84Po	85At	86Rn
				58Ce	59Pr	60Nd	61Pm	62Sm	63Eu	64Gd	65Tb	66Dy	67Ho	68Er	69Tm	70Yb	71Lu	

'Platinum group metals' (PGM)

'Rare earth elements' (REE)

Binder (1999); Skinner (1979); Wäger et al., 2010

Background

Critical raw materials (European Union)

- new on the list of critical raw materials:
  - *Baryte*
  - *Bismuth*
  - *Hafnium*
  - *Helium*
  - *Natural rubber*
  - *Phosphate rock*
  - *Scandium*
  - *Tantalum*
  - *Vanadium*
- not considered critical any more:
  - Chromium
  - Coking coal
  - Magnesite

"critical"
(26 out of 61 investigated raw materials / raw material groups)

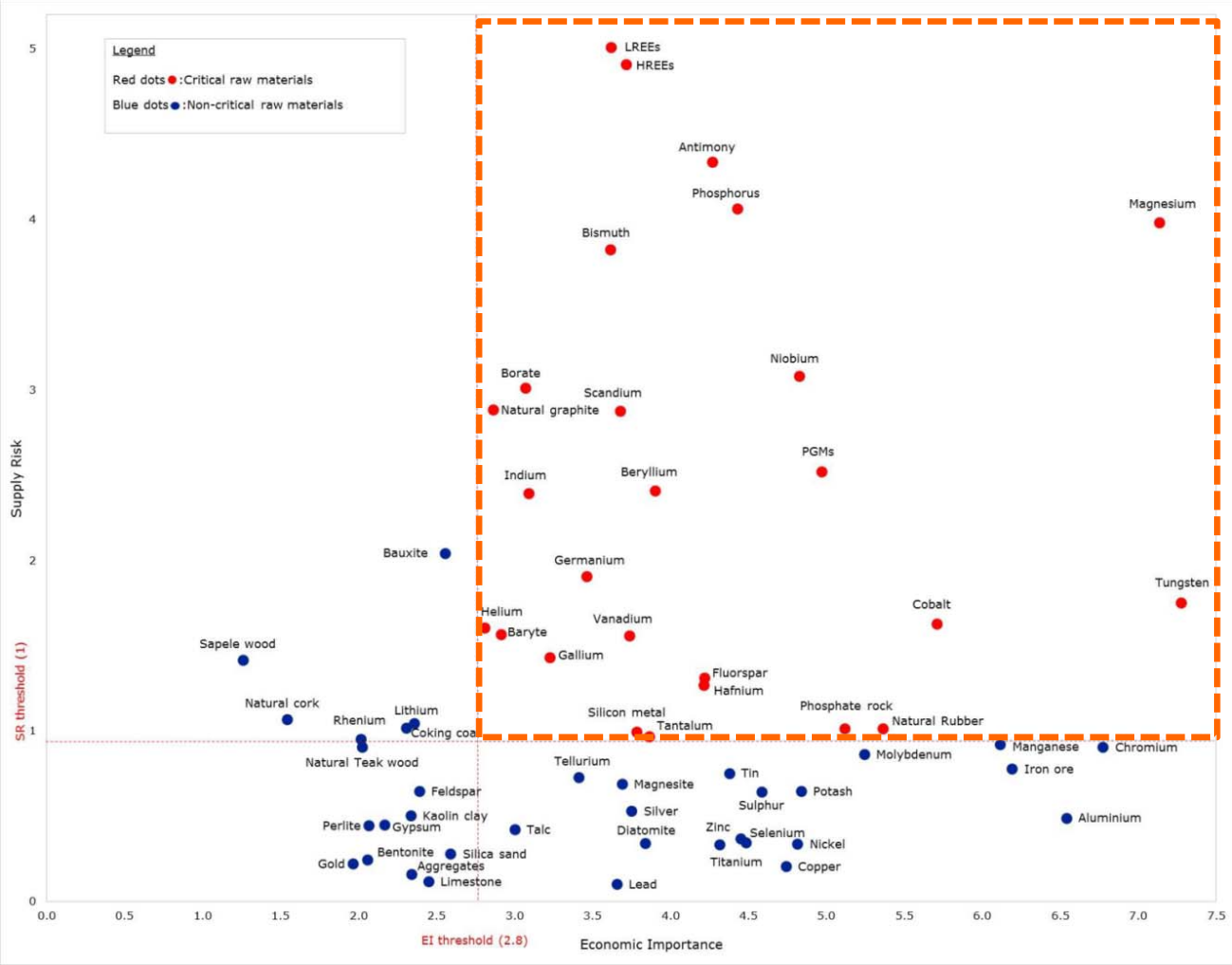

EC (2017) Study on the review of the list of Critical Raw Materials

Motivation

Scarce/critical metals in EEE

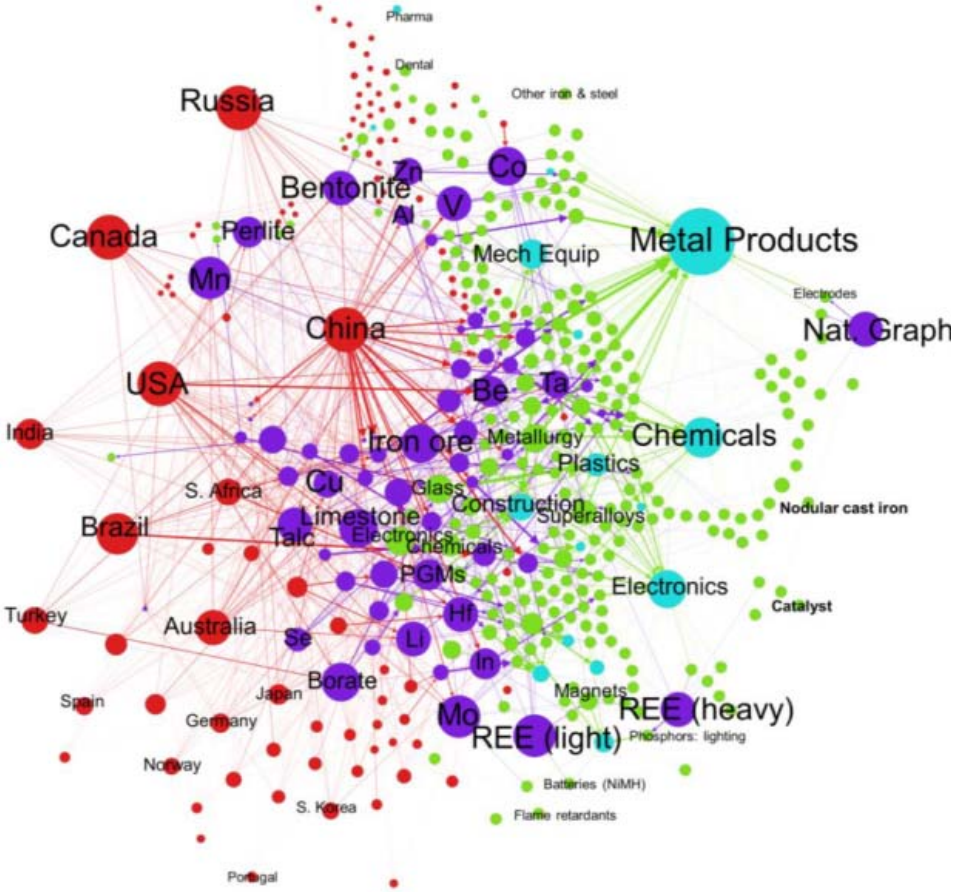

Indium

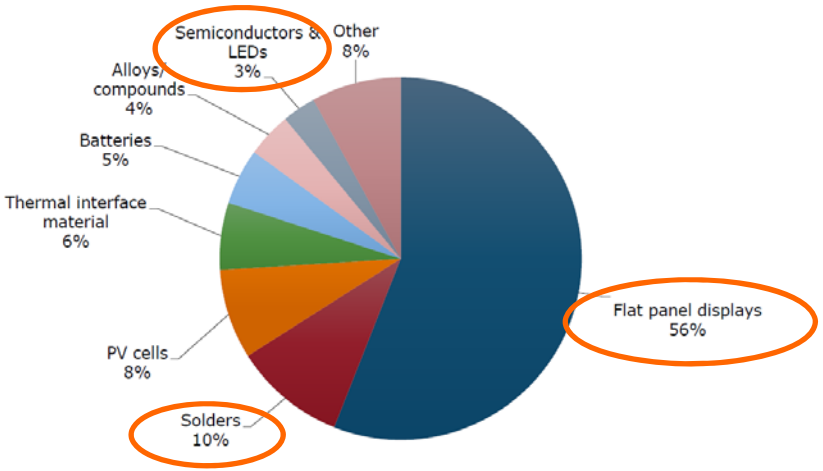

Tantalum

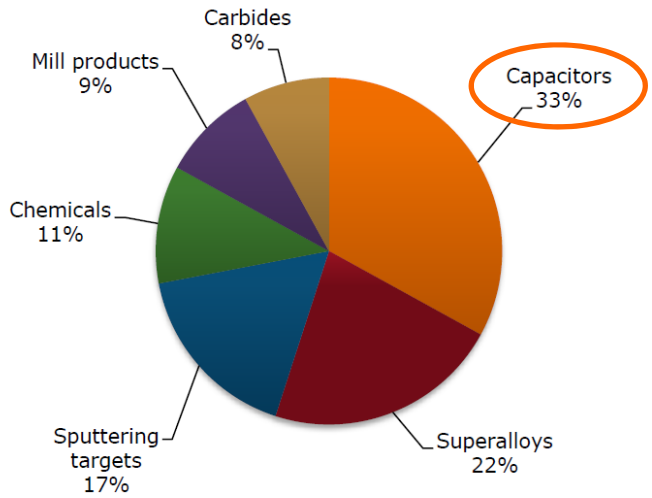

Blengini et al. (2017) ; Nuss,(2016) ; EC (2017)

Background

Scarce/critical metals in passenger car EE devices

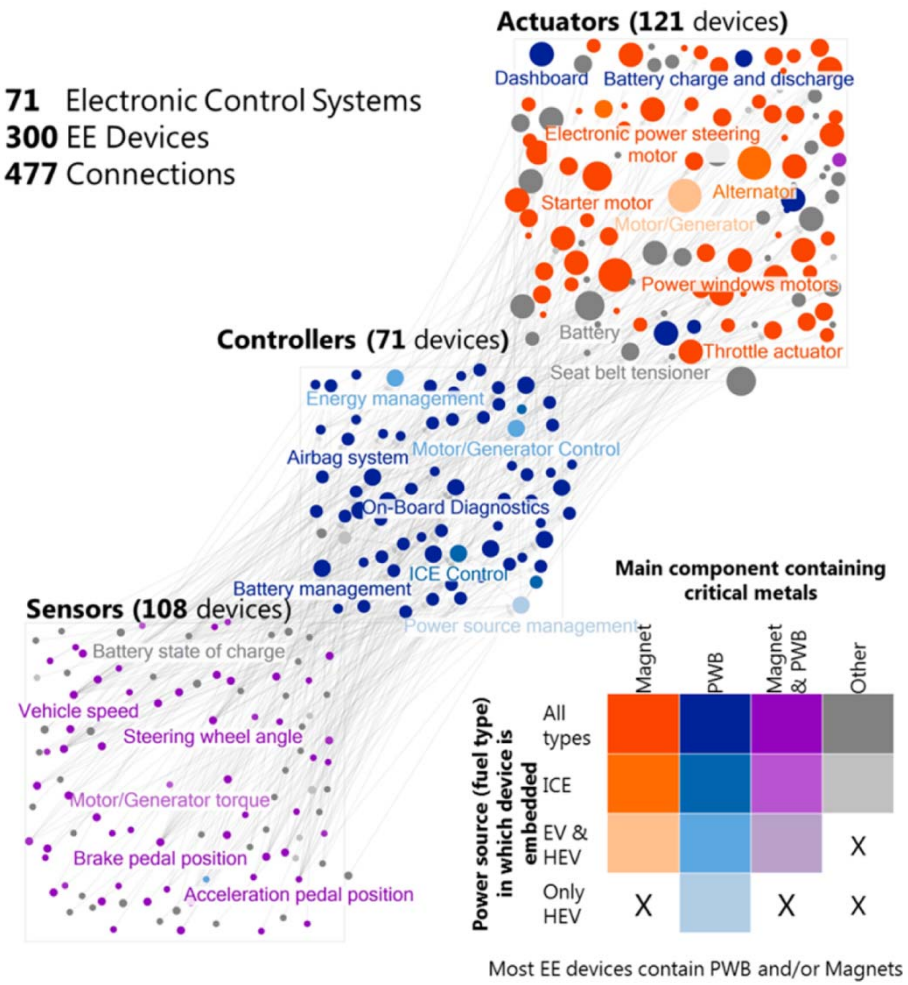

- The in-use stock of the investigated scarce metals in car electronics in 2014 was similar to the in-use stock of scarce metals in consumer electronics and Information and Communication Technologies (ICT);
- The flow of scarce metals in imported new cars in 2014 was 5x larger than in ELVs, which was to a significant part due to the increasing number of embedded electronics.

Restrepo et al. (2017) Stocks, Flows, and Distribution of Critical Metals in Embedded Electronics in Passenger VehiclesEnvironmental Science and Technology, 51 (3) 1129–1139.

Background

Recycling rates of metals

Empa
Materials Science and Technology

	Ia	IIa	IIIb	IVb	Vb	VIb	VIIb		VIII		Ib	IIb	IIIa	IVa	Va	VIa	VIIa	VIIIa
1 (K)	1H																	2He
2 (L)	3Li	4Be											005B	6C	7N	8O	9F	10Ne
3 (M)	11Na	012Mg											013Al	14Si	15P	16S	17Cl	18Ar
4 (N)	19K	20Ca	21Sc	022Ti	023V	024Cr	025Mn	026Fe	27Co	028Ni	29Cu	030Zn	31Ga	32Ge	33As	034Se	35Br	36Kr
5 (O)	37Rb	038Sr	39Y	040Zr	41Nb	42Mo	43Tc	44Ru	45Rh	46Pd	47Ag	48Cd	49In	50Sn	51Sb	52Te	53I	54Xe
6 (P)	55Cs	056Ba	57La	72Hf	73Ta	74W	75Re	76Os	77Ir	78Pt	79Au	80Hg	81Tl	82Pb	83Bi	84Po	85At	86Rn
			58Ce	59Pr	60Nd	61Pm	62Sm	63Eu	64Gd	65Tb	66Dy	67Ho	68Er	69Tm	70Yb	71Lu		

> 50%
> 25-50%
> 10-25%
1-10%
< 1%

UNEP (2011) Recycling Rates of Metals – A Status Report.

The EVA project

Motivation (1/3)

Empa
Materials Science and Technology

Ordinance
on the return, the reception and the disposal of electrical and electronic devices (ORDEE)

vom 14. Januar 1998 (Stand am 23. August 2005)

Der Schweizerische Bundesrat,

gestützt auf die Artikel 30*b*, 30*c* Absatz 3, 30*d* Buchstabe a, 30*f*, 30*g*, 30*h*, 39 Absatz 1 und 46 Absatz 2 des Umweltschutzgesetzes vom 7. Oktober 1983[1] (USG) sowie in Ausführung des Basler Übereinkommens vom 22. März 1989[2] über die Kontrolle der grenzüberschreitenden Verbringung gefährlicher Abfälle und ihrer Entsorgung,[3]

verordnet:

1. Abschnitt: Allgemeine Bestimmungen

Art. 1 Zweck und Geltungsbereich

[1] Diese Verordnung soll sicherstellen, dass elektrische und elektronische Geräte:

a. nicht in Siedlungsabfälle gelangen;

b. umweltverträglich entsorgt werden.

[2] Sie regelt die Rückgabe, die Rücknahme und die Entsorgung elektrischer und elektronischer Geräte.[4]

[3] Die Vorschriften der Verordnung vom 22. Juni 2005[5] über den Verkehr mit Abfällen und der Chemikalien-Risikoreduktions-Verordnung vom 18. Mai 2005[6] bleiben vorbehalten.[7]

Art. 2 Begriff

[1] Geräte im Sinne dieser Verordnung sind elektrisch betriebene:

a. Geräte der Unterhaltungselektronik;

AS **1998** 827

1 SR **814.01**
2 SR **0.814.05**
3 Fassung gemäss Ziff. I der V vom 23. Juni 2004, in Kraft seit 1. Jan. 2005 (AS **2004** 3529).
4 Fassung gemäss Anhang 3 Ziff. II 7 der V vom 22. Juni 2005 über den Verkehr mit Abfällen, in Kraft seit 1. Jan. 2006 (SR **814.610**).
5 SR **814.610**
6 SR **814.81**
7 Fassung gemäss Anhang 3 Ziff. II 7 der V vom 22. Juni 2005 über den Verkehr mit Abfällen, in Kraft seit 1. Jan. 2006 (SR **814.610**).

under revision…

SWICO

SENS eRecycling

SLRS

INOBAT

Motivation (2/3)

Ordinance on the return, the reception and the disposal of electrical and electronic devices (ORDEE)

Art. 2 Gegenstand und Geltungsbereich

1 Die Verordnung regelt die Rückgabe, die Rücknahme und die Entsorgung elektrischer und elektronischer Geräte sowie die Finanzierung der Entsorgung.

2 Für Geräte in Bauten oder Fahrzeugen gilt die Verordnung nur, wenn deren Ausbau mit verhältnismässigem Aufwand möglich ist. Das Bundesamt für Umwelt (BAFU) veröffentlicht eine regelmässig aktualisierte Liste dieser Geräte in einer Richtlinie.

For devices in buildings and vehicles the ordinance only applies, if their removal is possible with a proportionate effort. The Swiss Federal Office for the Environment (FOEN) publishes a regularly updated list of such devices in a guideline.

Motivation (3/3)

Ordinance on the return, the reception and the disposal of electrical and electronic devices (ORDEE)

Art. 9 Anforderungen an die Entsorgung

[1] Wer Geräte und Bestandteile entsorgt, muss sicherstellen, dass die Entsorgung umweltverträglich und nach dem Stand der Technik erfolgt; namentlich müssen:

a. besonders schadstoffhaltige Bestandteile wie quecksilberhaltige Schalter und Hintergrundbeleuchtungen von Bildschirmen, PCB-haltige Kondensatoren und FCKW-haltige Wärmeisolationen getrennt entsorgt werden;

b. verwertbare Anteile, insbesondere Kunststoffe, Bildröhren, metallhaltige Bestandteile wie Batterien, Leiterplatten und Metallgehäuse sowie seltene technische Metalle wie Gold, Palladium, Indium, Gallium, Germanium, Neodym und Tantal, soweit möglich verwertet werden;

[…] as far as possible, scarce technical metals such as gold, palladium, indium, gallium, germanium neodymium or tantalum have to be recovered.

The EVA project

Goals and scope

Goals

- Provide the scientific foundations to
  - estimate the recovery potential of scarce / critical metals in end-of-life vehicles (ELV);
  - select electrical and electronic (EE) devices to be removed from ELV "with proportionate effort";
  - optimise the recovery of scarce / critical metals from removed EE devices and ELV shredder outputs.

Scope

- Swiss passenger car fleet up to ~2030;
- scarce / critical metals.

Widmer et al. (2015)

The EVA project

Approach (1/2)

Characterisation of scarce/critical metals distribution in passenger vehicles

- Analysis of scarce / critical metals mass distribution in EE devices and end-of-life vehicle (ELV) shredder outputs for 100 ELVs.

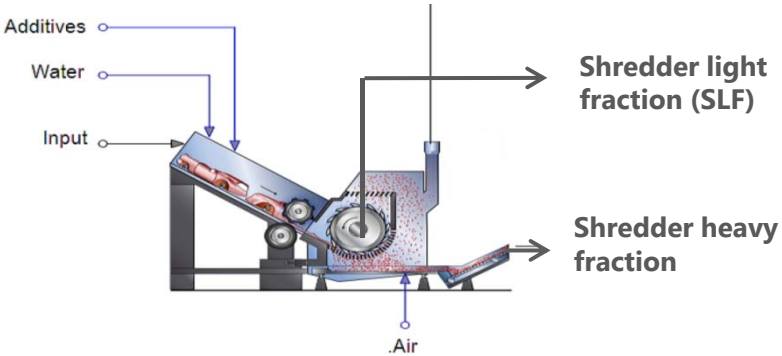

The EVA project

Characterisation of metals distribution (1/5)

n=100 vehicles
31 scarce / critical metals

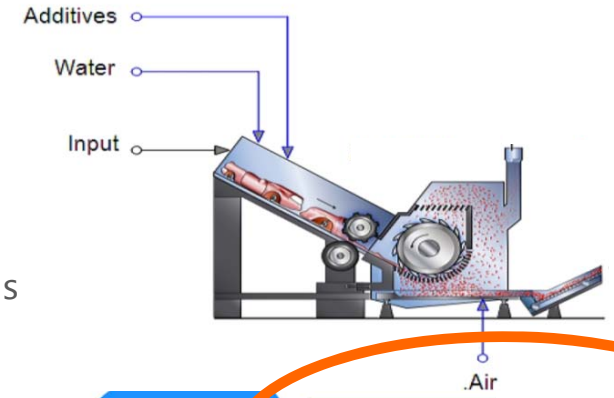

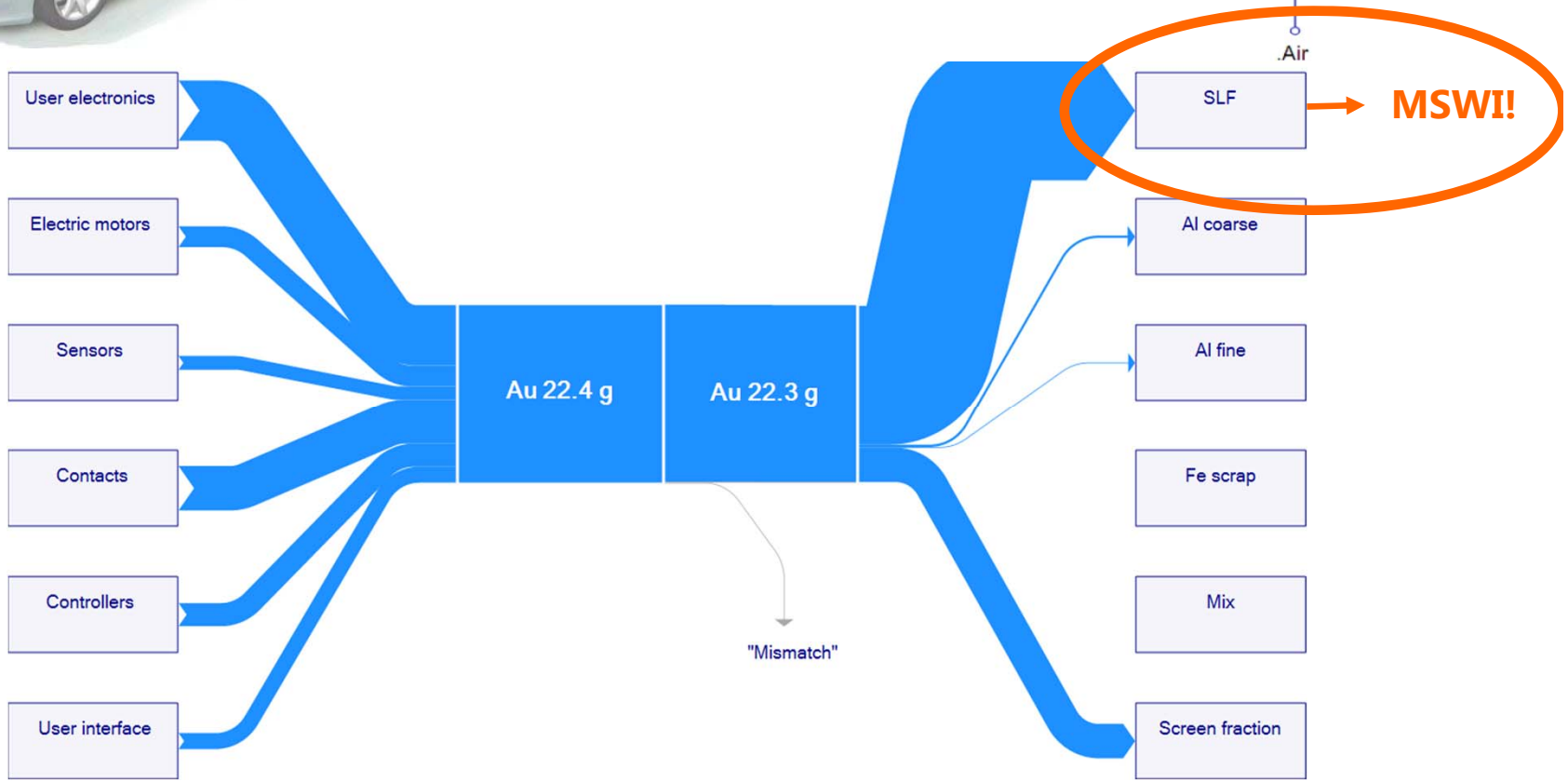

Widmer et al. (2015) Scarce Metals in Conventional Passenger Vehicles and End-of-Life Vehicle Shredder Output. ES&T 49, 4591-4599.

The EVA project

Characterisation of metals distribution (2/5)

n=100 vehicles
31 scarce / critical metals

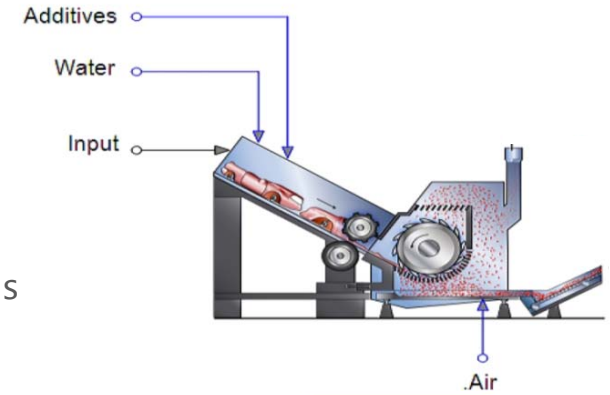

Not sampled:
- Body
- Loudspeakers
- Other electric motors and sensors (Alnico magnets)

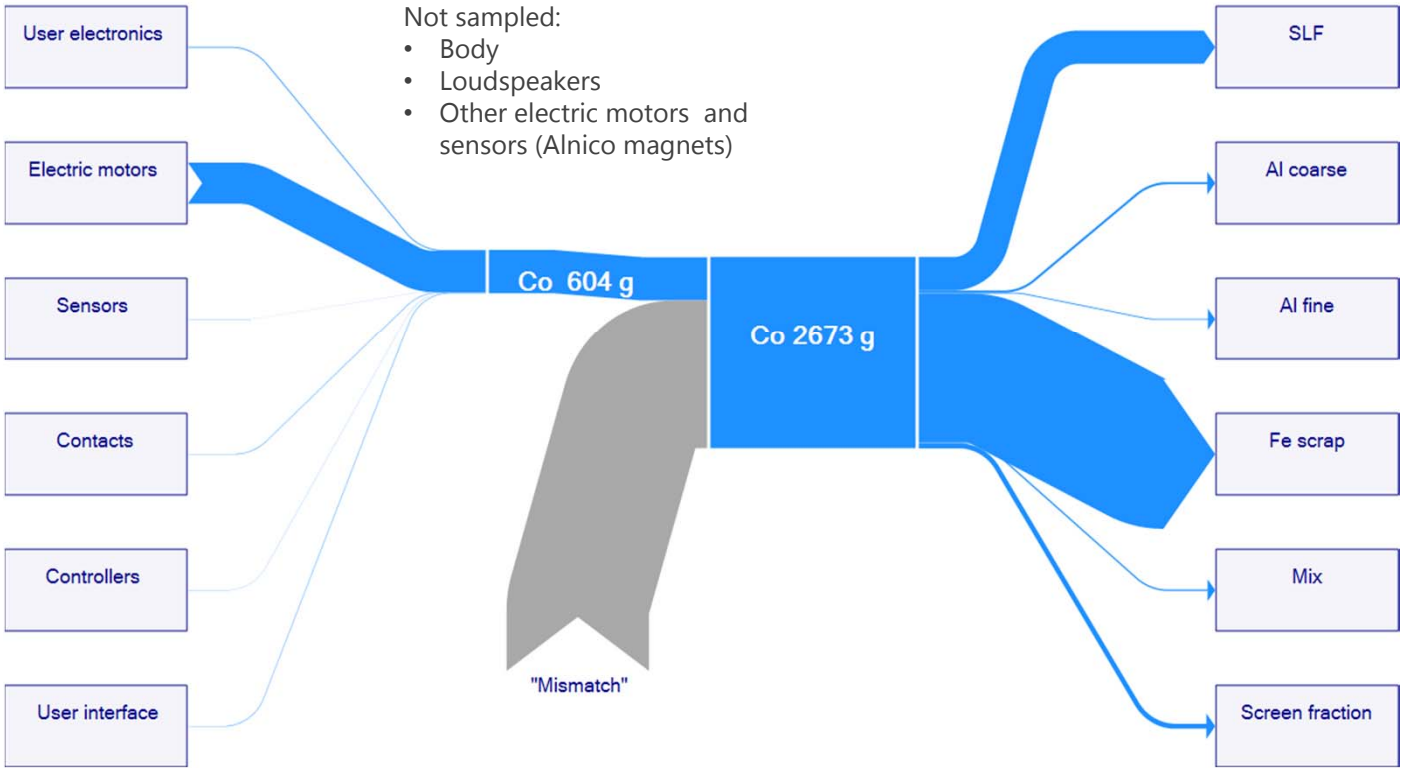

Widmer et al. (2015) Scarce Metals in Conventional Passenger Vehicles and End-of-Life Vehicle Shredder Output. ES&T 49, 4591-4599.

The EVA project

Characterisation of metals distribution (3/5)

Empa
Materials Science and Technology

Raw Materials Initiative (RMI) (2008)

List of Critical Raw Materials (CRM) (2011, 2014, 2017*)

European Innovation Partnership (EIP) on Raw Materials (2012)

Strategic Implementation Plan (SIP) (2013)

123 Raw Materials Commitments (2013, 2015)

European Institute of Innovation and Technology (EIT) Raw Materials Knowledge and Innovation Community (KIC) (2014)

Ongoing projects on CM and PM funded through 7th Framework Programme & Horizon 2020

EURARE	REProMag	CritCat	NOVACAM	REEcover	RECYCVAL-NANO	REE-CYCLE	AlCat
REE4EU	Eco-Solar	DEMETER	REMSIL	CABRISS	PARTIAL-PGMs	HYTECHCYCLING	IRENA
BLUE MINING	Flintstone2020	HYROWEEE DEMO	MSP-REFRAM	IMPACT	AMPHIBIAN	CAPTURE	HARFIR
INTMET	INREP	INFINITY	QUMEC	OptimOre	EFFIPRO	SIKELOR	ELSi
METGROW+	NOVAMAG	ShredderSort	AltiTude	STARCELL	EREAN	SOLCRIMET	SCRREEN
MIDAS	PLATIRUS	EQUINOX	REE Value Chain	ADIR	COLABATS	SMART GROUND	VENUS
ProSUM	CloseWEEE	LEO	GaLlophore	SCALE	CHROMIC	MAG-DRIVE	MINEPEP
MinFuture	HiTech AlkCarb	REDMUD	REFRASORT	FAME	SMARTCat	REMAGHIC	PROMETHEUS
AMDREY	CREATE	ARMEVA	ENVIREE	NewOres	SUSMIN	RAREASH	

EIT Raw Materials projects on CM and PM

AVAR	COFREE	DISPLAY
ECO COM'BAT	EXTREME	FASTRAM
FREECATS	inSPECtor	INSPIRE
NewEco	WEEE REC	OPTNEWOPT
PCRec	ReSiELP	RIGaT
SPARK		

Løvik, Hagelüken and Wäger (2018) Improving supply security of critical metals: Current developments and research in the EU. Sustainable Materials and Technologies 15, 9-18.

The EVA project

Characterisation of metals distribution (4/5)

http://www.urbanmineplatform.eu

Project funded by the European Union

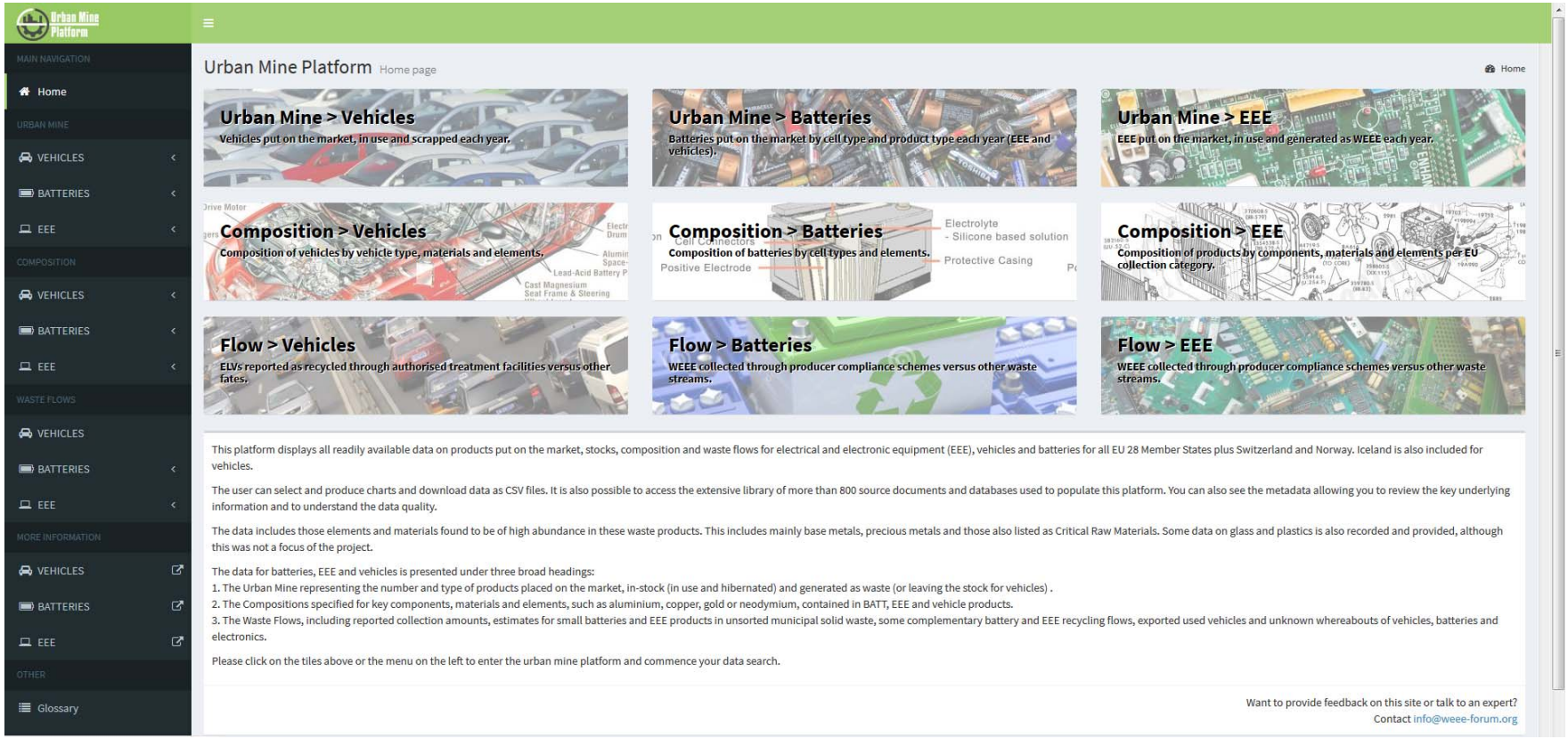

The EVA project

Characterisation of metals distribution (5/5)

Project funded by the European Union

Neodymium in the active vehicle fleet (EU 28 +3)

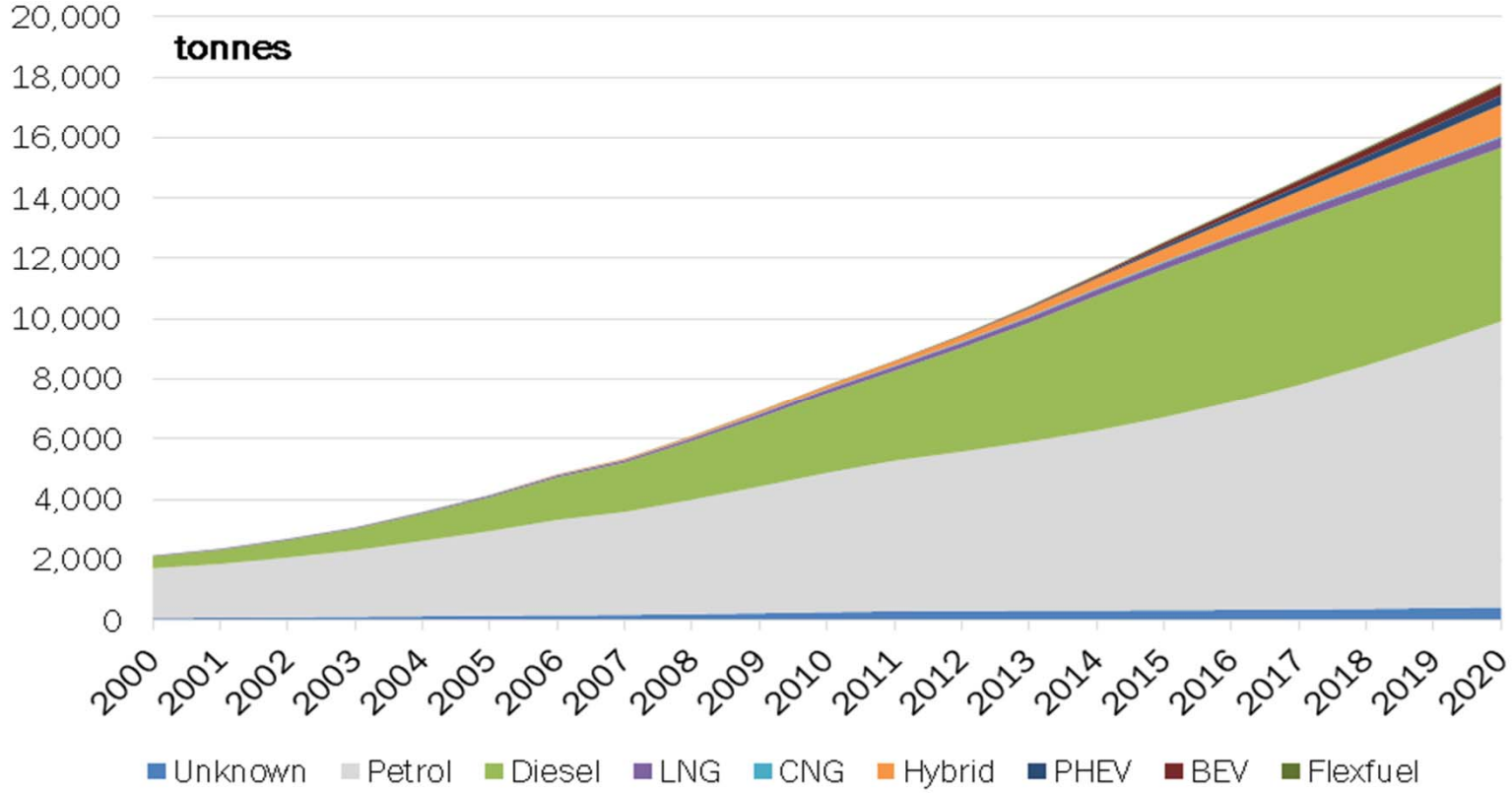

Historic data from 2005 to 2014, extrapolated trends from 2015 to 2020 [tonnes].
BEV=battery electric vehicle, FC=fuel cell, PHEV=plug in hybrid electric vehicle, HEV= hybrid electric vehicle.

The EVA project

Approach (2/2)

Identification of candidate EE devices to be removed for metals recovery

- EE devices removal tests;
- Dismantling tests for 129 end-of-life vehicles (ELVs).

Modelling, simulation and optimisation

- Stocks and flows modelling;
- LCA of recycling options.

Sampling and analysis of Shredder light fraction (SLF)

- Batch test with 129 dismantled end-of-life vehicles (ELVs);
- Analysis of scarce / critical metals mass distribution .

Characterisation of scarce/critical metals distribution in passenger vehicles

- Analysis of scarce / critical metals mass distribution in EE devices and end-of-life vehicle (ELV) shredder outputs for 100 ELVs.

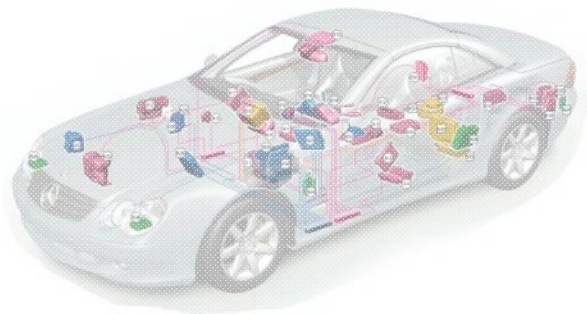

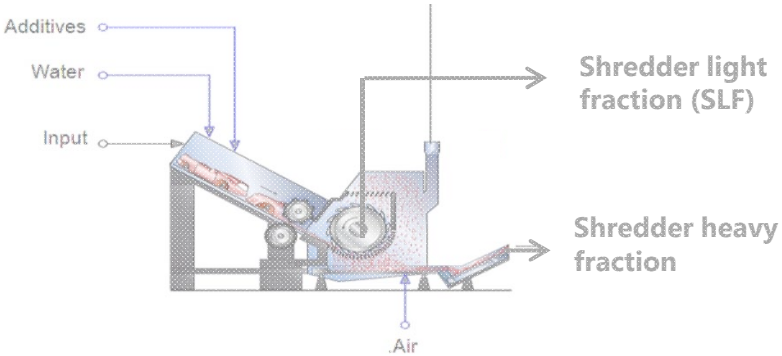

The EVA project

Identification of EE devices to be removed

1. ELV collection and dismantling

2. ELV Shredding

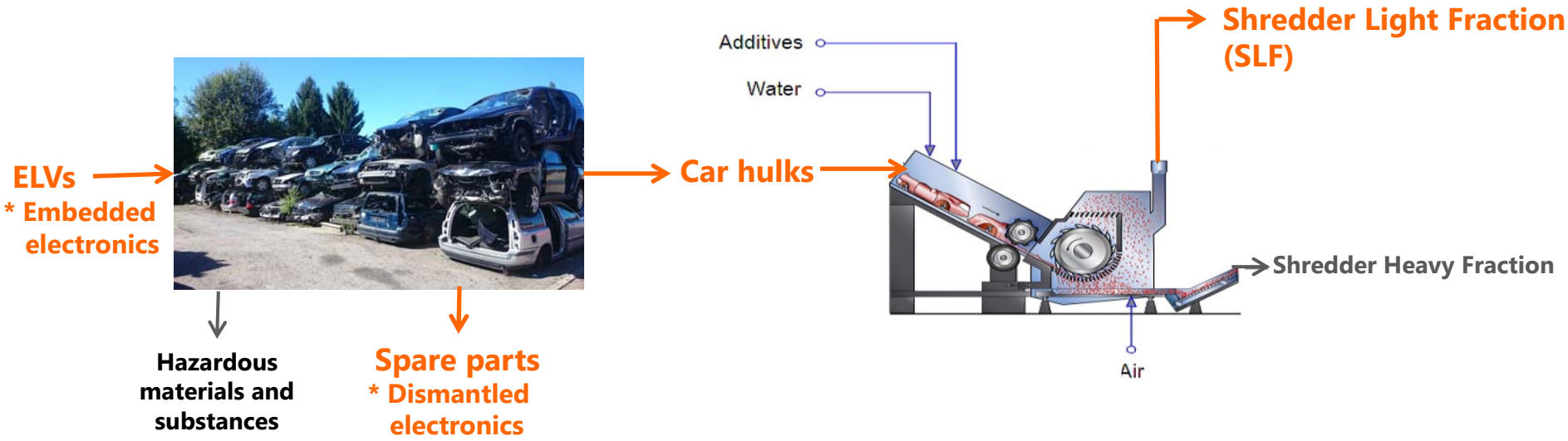

129 ELVs

- 62 «young» (≥2001)
- 67 «old» (<2001)

Restrepo et al. (2018)

The EVA project

Approach (2/2)

Empa
Materials Science and Technology

Identification of candidate EE devices to be removed for metals recovery

- EE devices removal tests;
- Dismantling tests for 129 end-of-life vehicles (ELVs).

Modelling, simulation and optimisation

- Stocks and flows modelling;
- LCA of recycling options.

Sampling and analysis of Shredder light fraction (SLF)

- Batch test with 129 dismantled end-of-life vehicles (ELVs);
- Analysis of scarce / critical metals mass distribution .

Characterisation of scarce/critical metals distribution in passenger vehicles

- Analysis of scarce / critical metals mass distribution in EE devices and end-of-life vehicle (ELV) shredder outputs for 100 ELVs.

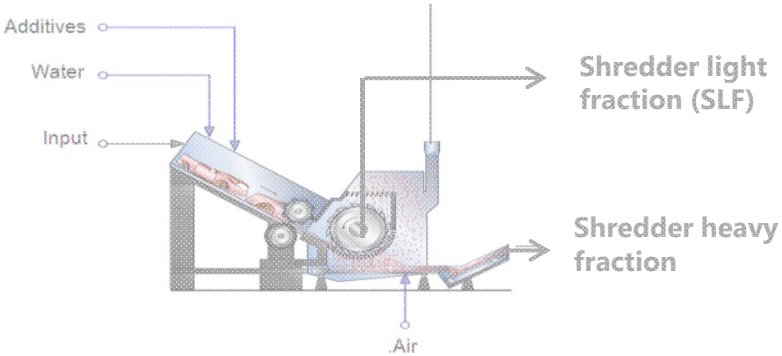

Scarce/critical metals stocks and flows modelling

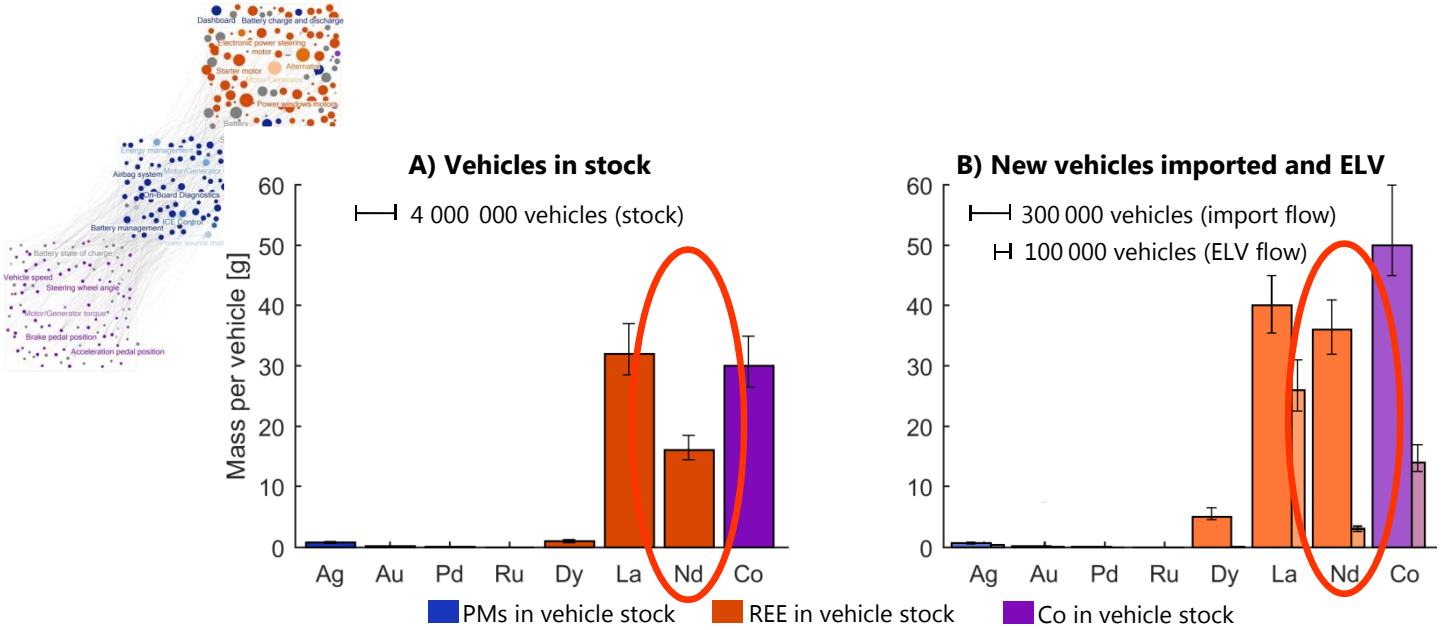

(bar width proportional to number of vehicles)

- The **total mass of Nd in EE devices embedded in passengers vehicles in use in Switzerland 2014 amounts to 70^{+30}_{-20} t ,** which is similar to the Nd stock in all consumer electronics and ICT equipment in Switzerland (in 2010).
- The **total mass of metals is 5 times larger in the import flow than in the ELV flow** due to
  - a larger number of vehicles, and
  - a higher CM mass per vehicle.

Restrepo et al. (2017) Stocks, Flows, and Distribution of Critical Metals in Embedded Electronics in Passenger VehiclesEnvironmental Science and Technology, 51 (3) 1129–1139.

Tentative application to EVA project (1/2)

- Geological knowledge(**G-axis**)
  - mass distribution of scarce / critical metals in automotive EE devices and shredder outputs through experiments;
  - scarce / critical metals stocks and flows in EE devices embedded in passenger vehicles for Switzerland 2014 (imported, in-use, end-of-life).
- Field project status and feasibility (**F-axis**)
  - dismantling experiments (infrastructure demand/skills, rate, time);
- Socio-economic viability (**E-axis**)
  - environmental impact savings.

Tentative application to EVA project (2/2)

- Preliminary classification:
  - **E3**: Recovery and sale is not expected to become economically viable in the fore-seeable future or **evaluation is at too early a stage to determine economic viability**;
  - **F2**: **Feasibility of recovery** by defined development project or mining operation **is subject to further evaluation**;
  - **G2**: **Quantities** associated with a known deposit that **can be estimated with a moderate level of confidence**.

Total material quantity initially in place	Past sourcing		Sales Production [a)]			
			Non-sales Production [b)]			
	Future sourcing		Class	Categories		
				E	F	G
	Known Anthropogenic Material source	Future sourcing by commercial development projects or ongoing sourcing operations. [c)]	Commercial Projects [e)]	1	1	1, 2, 3
		Potential future sourcing by contingent development projects or ongoing sourcing operations. [c)]	Potentially Commercial Projects [f)]	2	2	1, 2, 3
			Non-Commercial Projects [g)]	3	2	1, 2, 3
		Additional quantities in place associated with known Anthropogenic Material Sources. [d)]		3	4	1, 2, 3
	Potential Anthropogenic Material Source	Potential future sourcing by successful exploration activities from potential Anthropogenic Material Sources.	Exploration Projects	3	3	4
		Additional quantities in place associated with potential Anthropogenic Material Sources. [d)]		3	4	4

UNECE EGRC (2018) Final Draft Specifications for the application of the UNFC to Anthropogenic Resources.

Outlook

Possible future considerations

- Recommend best practices to address
  - the "level of confidence in the potential recoverability of the quantities" (G-axis);

Outlook

Recommend best practices (G-axis)

- Scope of the investigations
  - reuse, recovery and/or disposal;
  - 'recycling chain' perspective;
  - evolution of product- and related material stocks and flows;
  - implications for societal metabolism.
- Sampling, sample preparation and chemical analysis methodologies
  - sample representativeness;
  - sampling preparation and measurement uncertainties.
- Stock and flow modelling methodologies
  - static vs. dynamic, top-down vs. bottom-up, flow- vs. stock driven,...
  - model simplifications: minimal generic blocks, systematic errors, uncertainties
- Reference to other relevant specifications and standards
  - e.g. EN 50625-1 "Collection, logistics & treatment requirements for WEEE" ("CENELEC standard").

Outlook

Possible future considerations

- Recommend best practices to address
  - the "level of confidence in the potential recoverability of the quantities" (G-axis);
  - environmental issues (E-axis);
- Identify reference databases

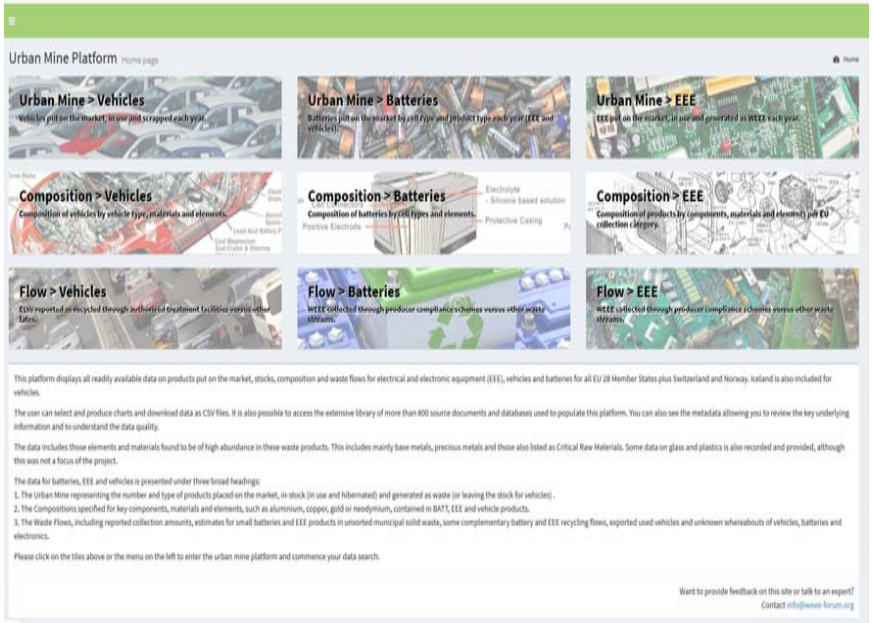

Huisman et al. (2017) Final Report Deliverable 6.6; http://www.urbanmineplatform.eu
http://rmis.jrc.ec.europa.eu/

Empa
Materials Science and Technology

Thank you for attention!

www.empa.ch/tsl