Energy Efficiency

5th International Forum on Energy for Sustainable Development

November 2014

mgarmendia@mct-esco.com

"... We can´t continue to use energy as if it were infinite ..."

In Uruguay, between 2000 and 2012, the final energy consumption increased more than 50%.

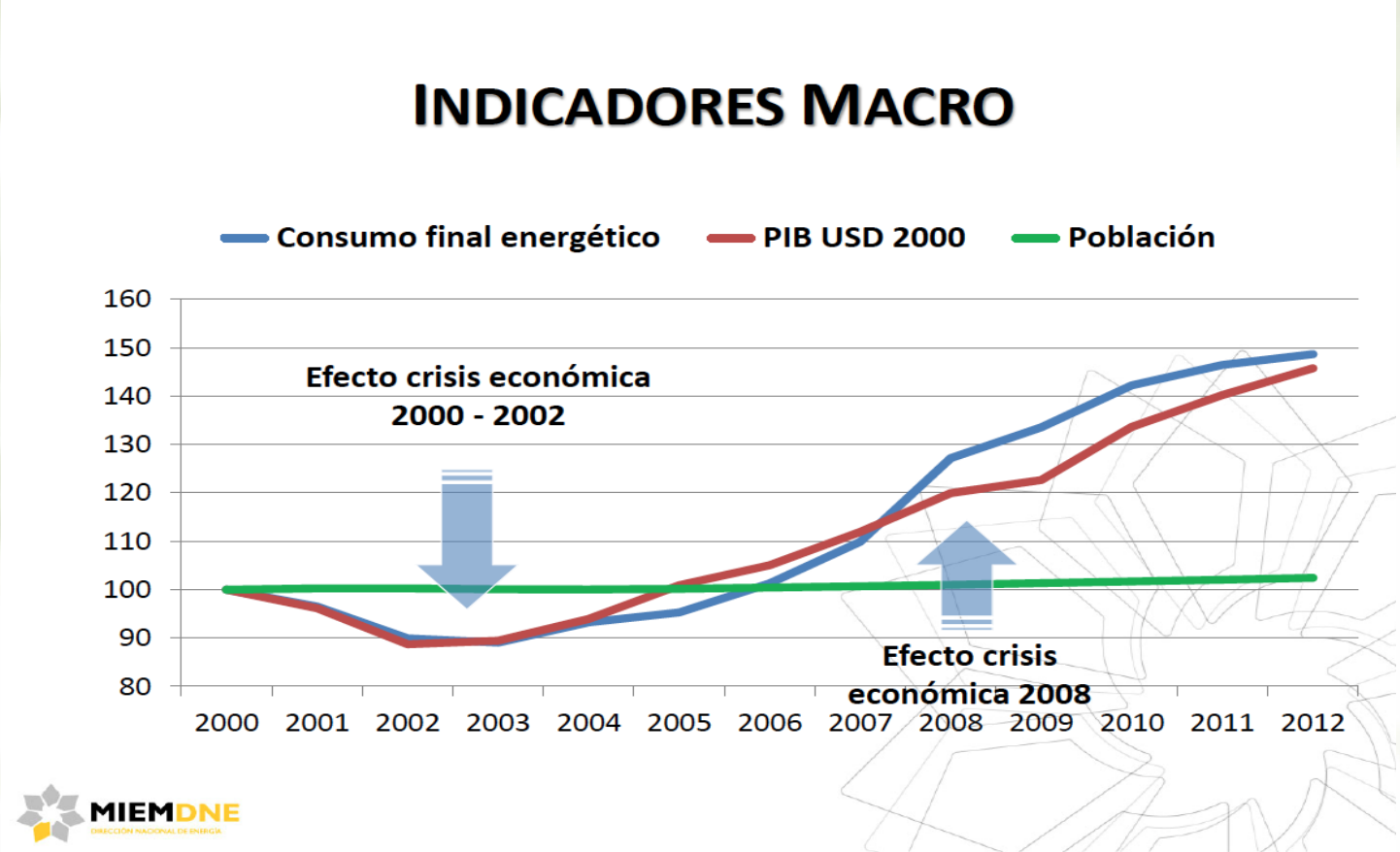

"... We can´t continue to use energy as if it were infinite ..."

If economic growth rates and final energy consumption are reviewed we notice that there is a coupling between the expansion of GDP and final energy consumption.

One of the tasks that are pending and that it is possible to achieve through energy efficiency, is to achieve a decoupling between the two variables.

"... We can´t continue to use energy as if it were infinite ..."

Improving energy efficiency is one of the most cost-effective options for meeting growing energy demand in most countries. It contributes to energy security, a better environment, improved quality of life, and economic well-being.

"... We can´t continue to use energy as if it were infinite ..."

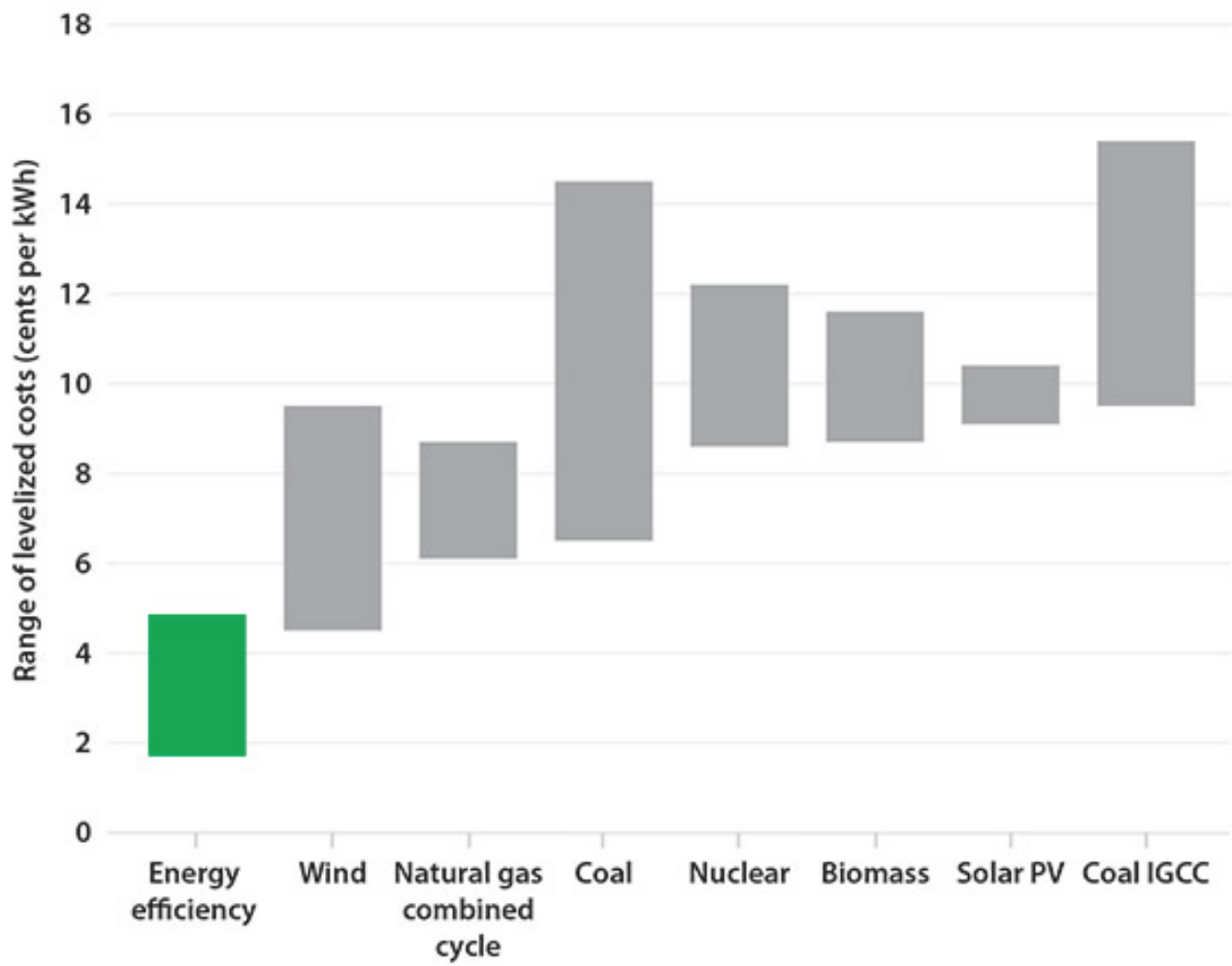

Fuente: American Council for an Energy Efficient Economy

Costs of energy efficiency vs. renewables

Non-Conventional Renewable Energies are gradually lowering their costs and are already becoming competitive with conventional energies.

Even with this low cost of NCRE, the cheapest way to "generate" energy is the energy efficiency.

We will see two examples for Uruguay.

Example: Heat Recovery

Project Objectives

Recover heat lost in the flue gases from the boiler, and use to heat water in a dairy.

This is a very significant savings because about 35% of the fuel consumed is used to heat water.

Example: Heat Recovery

The water is heated with an economizer by direct contact between the combustion gases and the water.

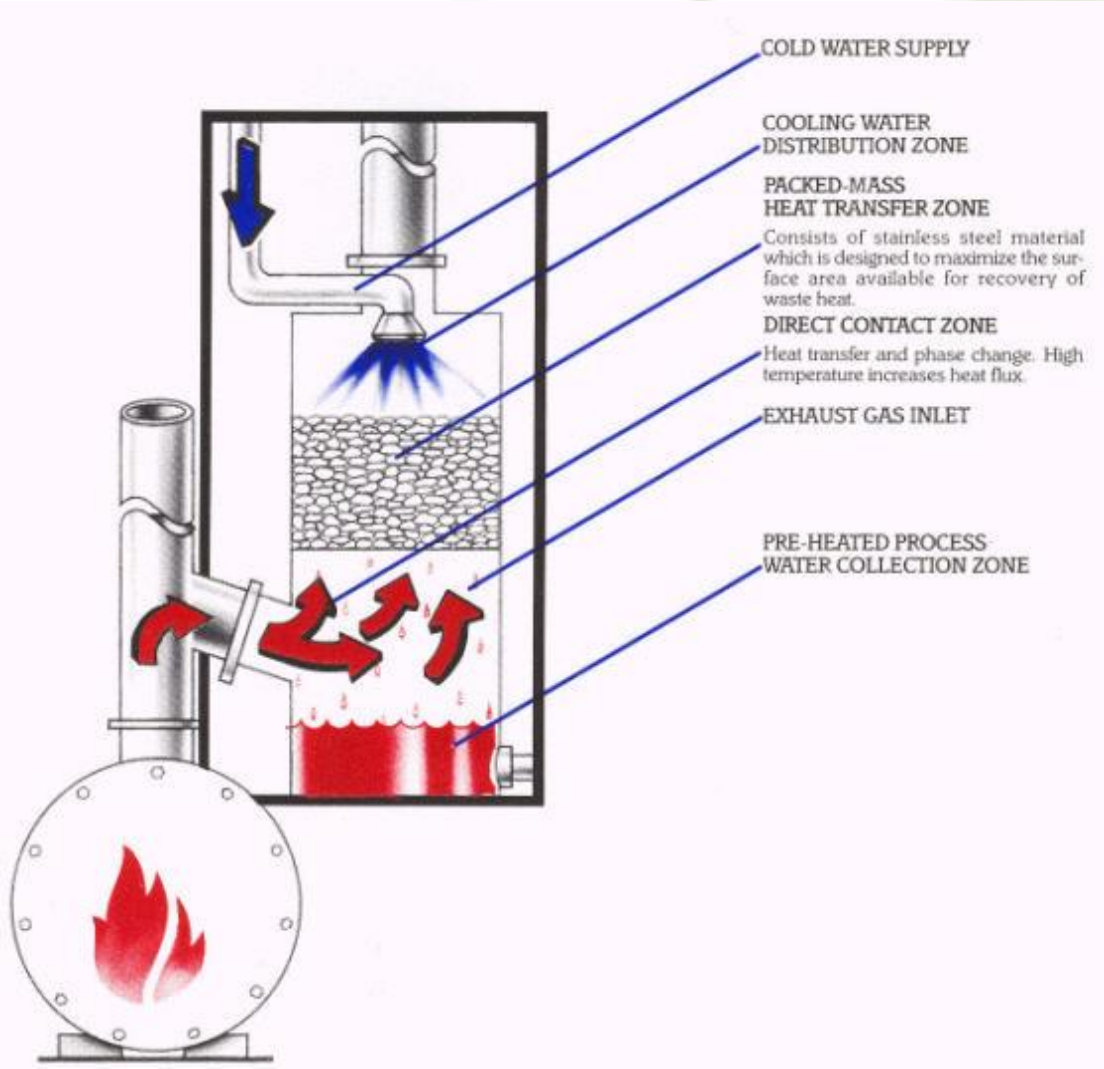

Example: Heat Recovery

Procedure

We defined the indicator Nm^3 N.G / 1.000 L milk

Historical values were taken and compared with those obtained after installing the heater (June 2007).

Example: Heat Recovery

Indicators

	Nm3 GN / 1.000 l leche			
Mes / Año	**2006**	**2007**	**2008**	**2009**
Enero	19,3	17,8	13,7	13,7
Febrero	18,1	17,8	14,9	13,3
Marzo	21,5	21,6	15,5	13,5
Abril	22,0	21,0	15,5	15,5
Mayo	21,4	21,8	15,8	15,4
Junio	22,0	17,1	14,9	14,5
Julio	21,2	16,4	16,5	15,2
Agosto	18,5	17,0	14,7	12,7
Setiembre	16,1	15,5	13,2	13,2
Octubre	17,9	13,8	13,3	13,3
Noviembre	19,1	14,1	11,4	12,7
Diciembre	20,3	14,0	13,7	12,9

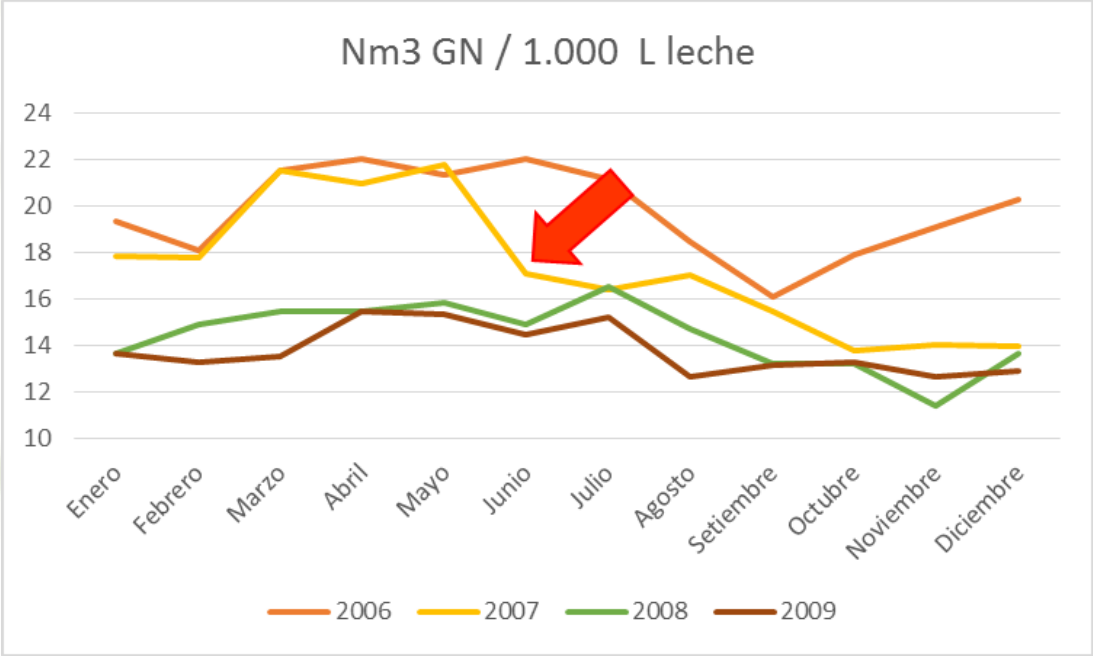

Example: Heat Recovery

CO_2 emmissions reduction

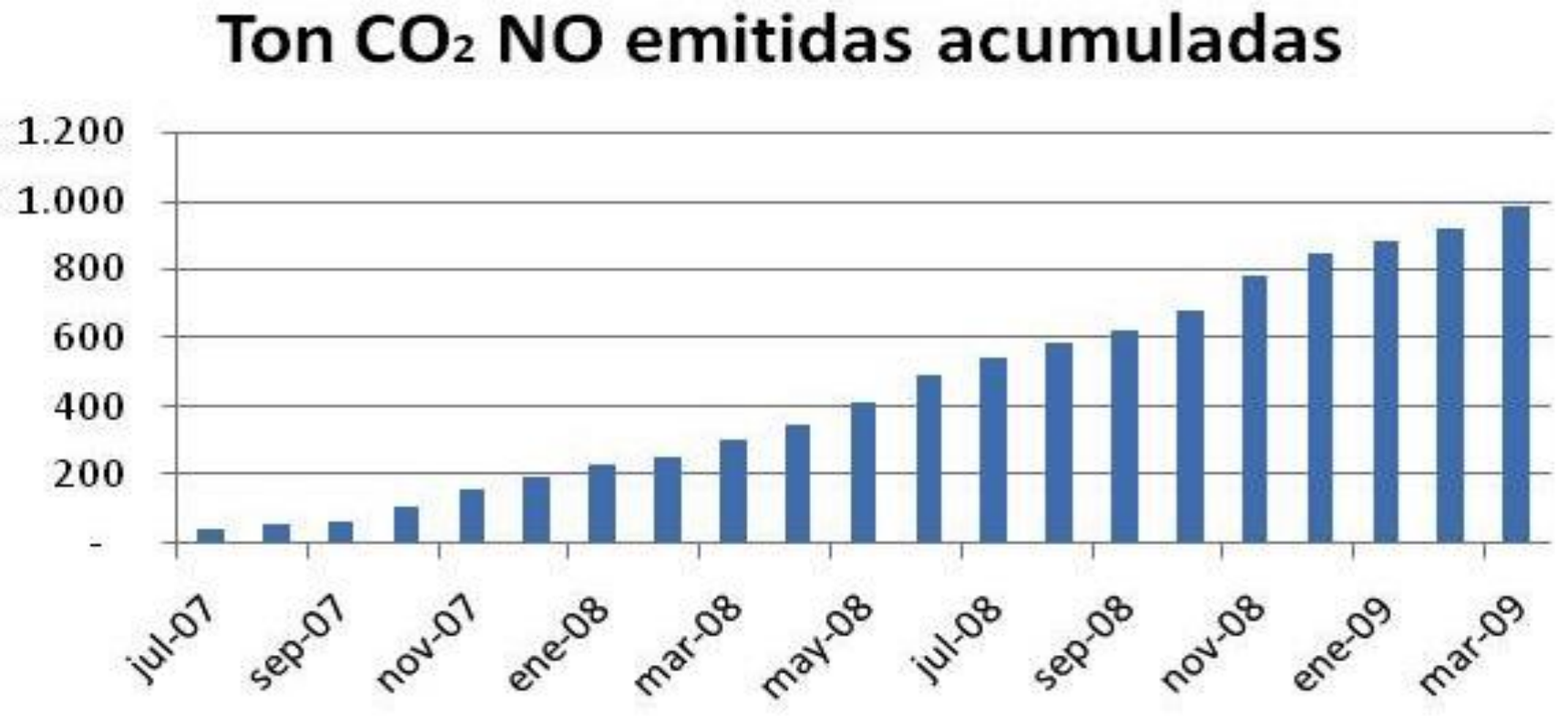

Example: Heat Recovery

Economic Evaluation

Gas consumption varied from 19.8 Nm3 / 1,000 L of milk at 13.8 Nm3 / 1,000 L milk.

Assuming an average daily production of 150,000 L of milk, then the annual saving is NG: 328.500 Nm^3, saving of 3.552 MWh / year

The investment was U$D 50,000

Vida útil	Costo (USD/MWh)
8 años	1,8
10 años	1,4
12 años	1,2

Example: Eolic Energy

Project

A slaughterhouse arises to use wind power for consumption, it installs two windmills for 1.8 MW each.

Station measuring was installed with the following characteristics:

90 meters: two anemometers, facing south and east, vane, thermometer
20 meters: anemometer facing south
Floor: thermometer and hygrometer

Example: Eolic Energy

Project analysis

After a year of measurement, we can predict a **capacity factor of 43%**.

The two wind generators produce an energy of 13.560 MWh / year.

Example: Eolic Energy

Project analysis

Investment: USD 7,200,000
Years of Loan: 15
TEA: 4%
Annual loan payment fee: USD 647,576
Annual maintenance cost: USD 144,000

In the above conditions, the cost of generating wind power for auto consumption is **58 USD / MWh**

Costs of energy efficiency vs. renewables

Energy	INVESTMENT	MWh (20 years)	Cost (USD/MWh)
Solar PV (150 kW)	245.000	3.650	54
Eolic (3,6 MW, cf: 43%)	7.200.000	27.120	46
Heat pump	450.000	22.400	20
Heat recovery	85.000	71.040	1

Energy efficiency barriers

As can be seen from the above examples, energy efficiency is one of the most cost effective options to meet the growing demand of energy.

There is great potential for savings in energy efficiency, and from an economic point of view is a very profitable investment.

If the above statements are fully tested, the big question is:

Why is it so hard to implement energy efficiency projects?

Energy efficiency barriers

The main barriers to energy efficiency:

1. No obligatory standards for minimum of energy efficiency.
2. Lack of knowledge of new technologies.
3. The private, pubic and residential sectors not identify energy efficiency projects as an area of opportunity.
4. Difficulty understanding the methods of measurement and verification.
5. Absence of "pilot project" in the public sector, after implemented serve as "showcase”.
6. Financial institutions do not see potential in energy efficiency projects and therefore not made a design of financial products specifically for EE projects
7. Investments in EE "compete" with other investments that must be made, and the competition is not only financial resources but also competes for time dedicated by responsible for making decisions to study EE projects.

CHALLENGES

- We need to develop protocols for the baseline and monitoring systems and verification
- Encourage and strengthen the development of independent validating entities.
- Structuring government policies that encourage the development of pilot projects for energy efficiency in the public sector which can then be used as examples for society.
- The mere existence of credit lines does not guarantee the development of energy efficiency projects. The fundamental challenge is to match supply with demand and one way to accomplish this is with training in energy efficiency and the development and implementation of Management Systems Energy technicians from various public and private companies .

EUREM in Uruguay

Since the year 2012 is being developed in Uruguay ¨Europeran Energy Manager. This is a training program on energy efficiency and practical refinement applied to the company. The program was developed in 2003 by German engineers skilled in energy efficiency.

The course objective is to generate specialized human capital in energy efficiency.

The program focuses on identifying key for the improvement of energy efficiency in processes, facilities, and construction companies and public companies.

EUREM in Uruguay

Since 2012 more than 50 professionals have attended the EUREM in Uruguay.

We have developed more than 50 projects for Energy Efficiency.

Only projects in 2013 involving a saving of over $ 3,000,000, avoiding the emission of 19,000 Tons of CO_2 per year, this is the equivalent of 12,000 families had no electricity consumed in a year.

PROJECT: INTERNATIONAL AIRPORT

PROJECT: INTERNATIONAL AIRPORT

The project is divided into two parts:

1) Modification of the heating system

It is proposed to replace the current heating system: boiler natural gas (90% efficiency) by a dual heat pump (350% efficiency).

2) Photovoltaic Power Generation

A 2 MW PV that will supply 100% of energy used by the heat pump. With these project the airport will not use more fossil fuel and use 100% renewable energy for the heating system.

PROJECT: INTERNATIONAL AIRPORT

kWh / año bolier	kWh/ año heat pump
1.559.556	439.560

The total investment for the new heating system is USD 450,000.

Annual savings: USD 145,000 (the pump is used for 5.5 months are the months that the airport has been warmed up).

The payback period of the investment is 17 months.

PROJECT: INTERNATIONAL AIRPORT

PLANO IMPLANTACION PROYECTADA EN AEROPUERTO DE CARRASCO

PROJECT: INTERNATIONAL AIRPORT

PLANO IMPLANTACION PROYECTADA EN AEROPUERTO DE CARRASCO

PROJECT: INTERNATIONAL AIRPORT

PLANO IMPLANTACION PROYECTADA EN AEROPUERTO DE CARRASCO

Nuevo estacionamiento techado con paneles FV para la recarga de la nueva flota de Taxis de Aeropuerto (vehículos eléctricos).

PROJECT: INTERNATIONAL AIRPORT

The installation of solar panels and heat pumps achieve a savings of 10.700 MWh / year, a decrease in emissions of 4.700 Ton CO_2 annually.

COGENERATION PROJECT IN ANCAP

ANCAP

GENERACION DE EE POR APROVECHAMIENTO DE GASES CALIENTES EN HORNO DE CLINKER

Magdalena Iturria
Medio Ambiente
ANCAP

MERCOSUR AHK

ENERGY EFFICIENCY

EUREM European EnergyManager licensed for Uruguay

COGENERATION PROJECT IN ANCAP

BALANCE ENERGETICO: gases de escape

- Calor excedentario:15 MW
  - Gases provenientes de ciclones y enfriador de clinker (24h/d): 207.000 m3(20°C /h)
  - Temperatura de humos disponible: 340 °C. Se pueden enfriar a 150°C.
- 2/3 se consumen en el molino de crudo, para secado de la harina (10 MW) que opera 18h/d.
- El resto se enfría en torre y se emite por chimenea.

EXCEDENTE: 40.000 MWh/año

COGENERATION PROJECT IN ANCAP

Kalina cycle of cogeneration

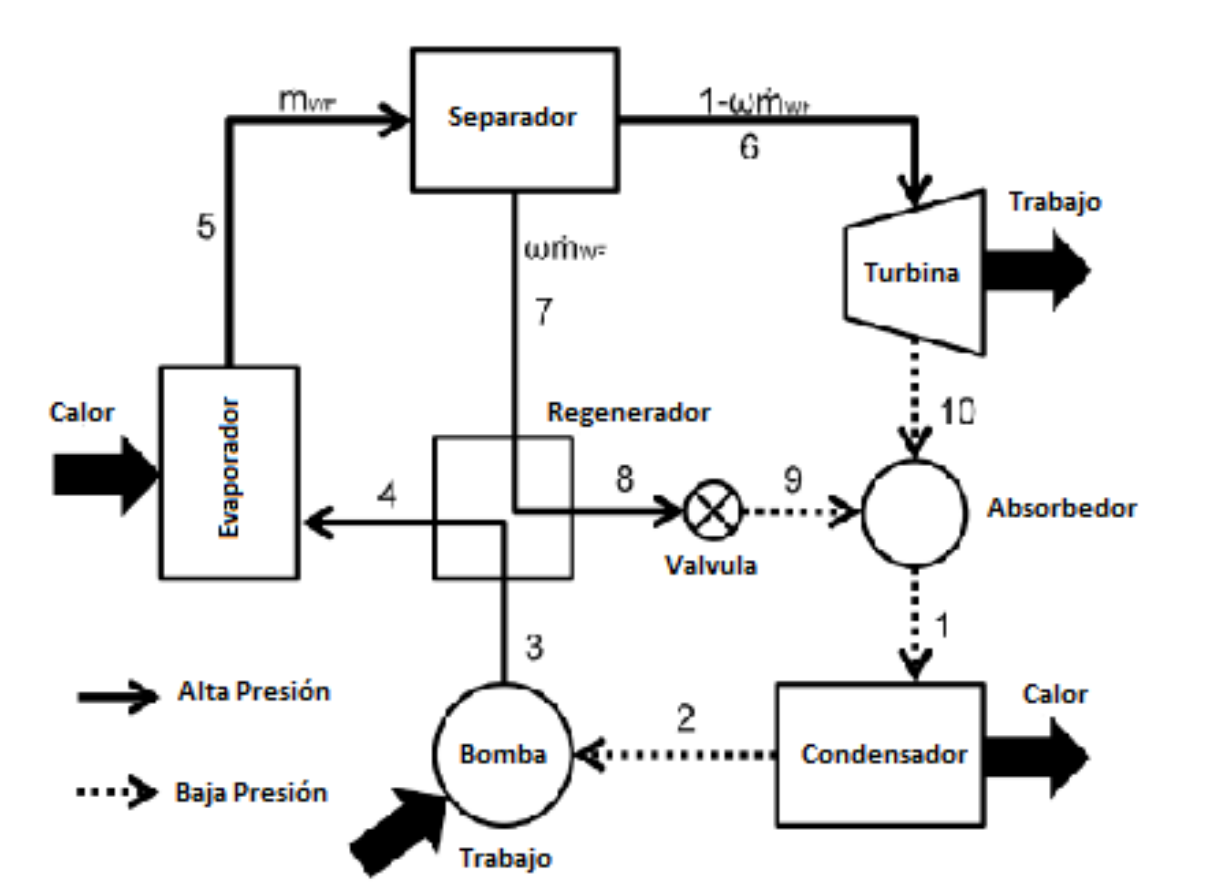

PROYECTO DE COGENERACIÓN EN FÁBRICA DE CEMENTO DE ANCAP

The project generates a savings of $ 1.25 million / year, for an investment of $ 3.5 million.

The IRR of the project is 27%

Achieve a reduction in 4.650 tones of CO_2 / year

Conclusions

There are several actions that must be performed, but in Uruguayan case we can conclude **: the training programs in Energy Management** designed for decision makers (engineers, architects, accountants, managers**) is an excellent tool for the development and implementation of energy efficiency projects for both public and private sectors**.

THANKS

Ing. Martin Garmendia
MCT-ESCO

mgarmendia@mct-esco.com