25 June 2014

Agreement

Concerning the Adoption of Uniform Technical Prescriptions for Wheeled Vehicles, Equipment and Parts which can be Fitted and/or be Used on Wheeled Vehicles and the Conditions for Reciprocal Recognition of Approvals Granted on the Basis of these Prescriptions*

(Revision 2, including the amendments which entered into force on 16 October 1995)

Addendum 109: Regulation No. 110

Revision 3

Incorporating all valid text up to:

Supplement 1 to 01 series of amendments to the Regulation - Date of entry into force: 10 June 2014

Uniform provisions concerning the approval of:

I. Specific components of motor vehicles using compressed natural gas (CNG) and/or liquefied natural gas (LNG) in their propulsion system

II. Vehicles with regard to the installation of specific components of an approved type for the use of compressed natural gas (CNG) and/or liquefied natural gas (LNG) in their propulsion system

---

UNITED NATIONS

* Former title of the Agreement: Agreement Concerning the Adoption of Uniform Conditions of Approval and Reciprocal Recognition of Approval for Motor Vehicle Equipment and Parts, done at Geneva on 20 March 1958.

Please recycle

Regulation No. 110

Uniform provisions concerning the approval of:

I. Specific components of motor vehicles using compressed natural gas (CNG) and/or liquefied natural gas (LNG) in their propulsion system

II. Vehicles with regard to the installation of specific components of an approved type for the use of compressed natural gas (CNG) and/or liquefied natural gas (LNG) in their propulsion system

Contents

Page

Regulation

1. Scope 7
2. References 7
3. Classification of components 11
4. Definitions 13

Part I - Approval of specific components of motor vehicles using compressed natural gas (CNG) and/or liquefied natural gas (LNG) in their propulsion system 19

5. Application for approval 19
6. Markings 19
7. Approval 20
8. Specifications on CNG and/or LNG components 21
9. Modifications of a type of CNG and/or LNG component and extension of approval 23
10. (Not allocated) 23
11. Conformity of production 23
12. Penalties for non-conformity of production 24
13. (Not allocated) 24
14. Production definitively discontinued 24
15. Names and addresses of Technical Services responsible for conducting approval tests, and of Type Approval Authorities 24

Part II - Approval of vehicles with regard to the installation of specific components of an approved type for the use of compressed natural gas (CNG) and/or liquefied natural gas (LNG) in their propulsion system 25

16. Application for approval 25

17. Approval 25

18. Requirements for the installation of specific components for the use of compressed natural gas and/or liquefied natural gas in the propulsion system of a vehicle 26

19. Conformity of production 33

20. Penalties for non-conformity of production 33

21. Modification and extension of approval of a vehicle type 33

22. Production definitively discontinued 34

23. Names and addresses of Technical Services responsible for conducting approval tests, and of Type Approval Authorities 34

24. Transitional provisions 34

Annexes

1A Essential characteristics of the CNG/LNG components 36

1B Essential characteristics of the vehicle, engine and CNG/LNG-related system 43

2A Arrangement of the CNG/LNG component type approval mark 50

2B Communication concerning the approval or extension or refusal or withdrawal of approval or production definitively discontinued of a type of CNG/LNG component pursuant to Regulation No. 110 51

Addendum 53

2C Arrangement of approval marks 56

2D Communication concerning the approval or extension or refusal or withdrawal of approval or production definitively discontinued of a vehicle type with regard to the installation of CNG/LNG system pursuant to Regulation No. 110 57

3 On-board storage of natural gas as a fuel for automotive vehicles 59

3A Gas cylinders - High pressure cylinder for the on-board storage of CNG compressed natural gas as a fuel for automotive vehicles 60

Appendix A - Test methods 88

Appendix B - (Not allocated) 97

Appendix C - (Not allocated) 98

Appendix D - Report forms 99

Appendix E - Verification of stress ratios using strain gauges 101

Appendix F - Fracture performance methods 102

Appendix G - Instructions by the container manufacturer on handling, use and inspection of cylinders 106

Appendix H - Environmental test 108

3B Liquid tanks - Vacuum insulated vessels for the on-board storage of natural gas as a fuel for automotive vehicles 113

Appendix A - Test methods 123

Appendix B - Report form 126

Appendix C - Instructions by the tanks manufacturer on handling, use and inspection of tanks 127

Appendix D - Report form 1 129

4A Provisions on the approval of the CNG automatic valve, non-return valve, pressure relief valve, pressure relief device (temperature triggered), excess flow valve, manual valve and the pressure relief device (pressure triggered) 130

4B Provisions on the approval of flexible fuel lines or hoses for CNG and hoses for LNG 134

4C Provisions on the approval of the CNG filter 158

4D Provisions on the approval of the CNG pressure regulator 159

4E Provisions on the approval of the CNG pressure and temperature sensors 161

4F Provisions on the approval of the CNG filling unit (Receptacle) 162

4G Provisions on the approval of CNG gas flow adjuster and gas/air mixer, gas injector or fuel rail 165

4H Provisions on the approval of the electronic control unit 167

4I Provisions on the approval of the LNG heat exchanger – vaporizer 168

4J Provisions on the approval of the LNG filling receptacle 169

4K Provisions on the approval of the LNG pressure control regulator 171

4L Provisions on the approval of LNG pressure and/or temperature sensor 172

4M Provisions on the approval of the natural gas detector 173

4N Provisions on the approval of the automatic valve, check valve, pressure relief valve, excess flow valve, manual valve and non-return valve for LNG applications. 174

4O Provisions on the approval of the LNG fuel pump 177

5 Test procedures 179

5A Overpressure test (strength test) 181

5B External leakage test 182

5C Internal leakage test 184

5D CNG/LNG compatibility test 186

5E Corrosion resistance test 187

5F Resistance to dry heat 188

5G Ozone ageing 189

5H Temperature cycle test 190

5I Pressure cycle test applicable only to cylinders 191

5J & 5K - Not allocated 192

5L Durability test (continued operation) 193

5M Burst/destructive test applicable only to CNG cylinders 194

5N Vibration resistance test 195

5O Operating temperatures 196

5P LNG – Low temperature test 197
5Q Compatibility with heat exchange fluids of non-metallic parts 198
6 Provisions on CNG identification mark for vehicles of categories M_2 and M_3, N_2 and N_3 199
7 Provisions on LNG identification mark for vehicles of categories M_2 and M_3, N_2 and N_3 200

1. Scope

This Regulation applies to:

1.1. Part I Specific components for vehicles of category M and N[1] using compressed natural gas (CNG) and/or liquefied natural gas (LNG) in their propulsion system;

1.2. Part II Vehicles of category M and N[1] with regard to the installation of specific components, for the use of compressed natural gas (CNG) and/or liquefied natural gas (LNG) for propulsion, of an approved type.

2. References

The following standards contain provisions that, through reference in this text, constitute provisions of this Regulation.

ASTM Standards[2]

ASTM B117-90	Test method of Salt Spray (Fog) Testing
ASTM B154-92	Mercurous Nitrate Test for Copper and Copper Alloys
ASTM D522-92	Mandrel Bend Test of attached Organic Coatings
ASTM D1308-87	Effect of Household Chemicals on Clear and Pigmented Organic Finishes
ASTM D2344-84	Test Method for Apparent interlaminar Shear Strength of Parallel Fibre Composites by Short Beam Method
ASTM D2794-92	Test Method for Resistance of Organic Coatings to the Effects of Rapid Deformation (Impact)
ASTM D3170-87	Chipping Resistance of Coatings
ASTM D3418-83	Test Method for Transition Temperatures Polymers by Thermal Analysis
ASTM E647-93	Standard Test, Method for Measurement of Fatigue Crack Growth Rates
ASTM E813-89	Test Method for J_{IC}, a Measure of Fracture Toughness
ASTM G53-93	Standard Practice for Operating Light and Water – Exposure Apparatus (Fluorescent UV-Condensation Type) for Exposure of non-metallic materials

[1] As defined in the Consolidated Resolution on the Construction of Vehicles (R.E.3.), document ECE/TRANS/WP.29/78/Rev.3, para. 2. – www.unece.org/trans/main/wp29/wp29wgs/wp29gen/wp29resolutions.html

[2] American Society for Testing and Materials.

BSI Standards[3]	
BS 5045	Part 1 (1982) Transportable Gas Containers – Specification for Seamless Steel Gas Containers Above 0.5 litre Water Capacity
BS 7448-91	Fracture Mechanics Toughness Tests Part I – Method for Determination of K_{IC}, Critical COD and Critical J Values of BS PD 6493-1991. Guidance an Methods for Assessing the A Acceptability of Flaws in Fusion Welded Structures; Metallic Materials
EN Standards[4]	
EN 13322-2 2003	Transportable gas cylinders – Refillable welded steel gas cylinders – Design and construction – Part 2: Stainless steel
EN ISO 5817 2003	Arc-welded joints in steel; guidance on quality levels for imperfections
EN1251-2 2000	Cryogenic vessels. Vacuum insulated vessels of not more than 1,000 litres volume
EN 895:1995	Destructive tests on welds in metallic materials. Transverse tensile test
EN 910:1996	Destructive test methods on welds in metallic materials. Bend tests
EN 1435:1997	Non-destructive examination of welds. Radiographic examination of welded joints
EN 6892-1:2009	Metallic materials. Tensile test
EN 10045-1:1990	Charpy impact test on metallic materials. Test method (V- and U-notches)
ISO Standards[5]	
ISO 37	Rubber, vulcanized or thermoplastic – Determination of tensile stress-strain properties.
ISO 148-1983	Steel – Charpy Impact Test (v-notch)
ISO 188	Rubber, volcanized or thermoplastic – Accelerated ageing and heat resistance tests
ISO 306-1987	Plastics - Thermoplastic Materials – Determination of Vicat Softening Temperature
ISO 527 Pt 1-93	Plastics - Determination of Tensile Properties – Part I: General principles
ISO 642-79	Steel-Hardenability Test by End Quenching (Jominy Test)

[3] British Standards Institution.
[4] European Norm.
[5] International Organization for Standardization.

ISO 12991	Liquefied natural gas (LNG) – transportable tanks for use on-board vehicles
ISO1307	Rubber and plastics hoses – Hose sizes, minimum and maximum inside diameters, and tolerances on cut-to-length hoses
ISO 1402	Rubber and plastics hoses and hose assemblies – Hydrostatic testing
ISO 1431	Rubber, vulcanized or thermoplastic – Resistance to ozone cracking
ISO 1436	Rubber hoses and hose assemblies – Wire-braid-reinforced hydraulic types for oil-based or water-based fluids – Specification
ISO 1817	Rubber, vulcanized or thermoplastic – Determination of the effect of liquids
ISO 2808-91	Paints and Varnishes – Determination of film Thickness
ISO 3628-78	Glass Reinforced Materials – Determination of Tensile Properties
ISO 4080	Rubber and plastics hoses and hose assemblies – Determination of permeability to gas
ISO 4624-78	Plastics and Varnishes – Pull-off Test for adhesion
ISO 4672	Rubber and plastics – Sub-ambient temperature flexibility tests
ISO 6982-84	Metallic Materials – Tensile Testing
ISO 6506-1981	Metallic Materials – Hardness test – Brinell Test
ISO 6508-1986	Metallic Materials – Hardness Tests – Rockwell Test (Scales, ABCDEFGHK)
ISO 7225	Precautionary Labels for Gas Cylinders
ISO/DIS 7866-1992	Refillable Transportable Seamless Aluminium Alloy Cylinders for Worldwide Usage Design, Manufacture and Acceptance
ISO 9001:1994	Quality Assurance in Design/Development. Production, Installation and Servicing
ISO 9002:1994	Quality Assurance in Production and Installation
ISO/DIS 12737	Metallic Materials – Determination of the Plane-Strain Fracture Toughness
ISO12991	Liquefied natural gas (LNG) – transportable tanks for use on board of vehicles
ISO14469-1:2004	Road Vehicles: compressed natural gas CNG refuelling connector: Part I: 20 MPa (200 bar) connector

ISO14469-2:2007	Road Vehicles: compressed natural gas CNG refuelling connector: Part II: 20 MPa (200 bar) connector
ISO15500	Road vehicles – Compressed natural gas (CNG) fuel system components
ISO 21028-1:2004	Cryogenic vessels – Toughness requirements for materials at cryogenic temperature – Part I: Temperatures below -80 °C
ISO 21029-1:2004	Cryogenic vessels – Transportable vacuum insulated vessels of not more than 1,000 litres volume – Part I: Design, fabrication, inspection and tests
ISO/IEC Guide 25-1990	General requirements for the Technical Competence of Testing Laboratories
ISO/IEC Guide 48-1986	Guidelines for Third Party Assessment and Registration of Supplies Quality System
ISO/DIS 9809	Transportable Seamless Steel Gas Cylinders Design, Construction and Testing – Part I: Quenched and Tempered Steel Cylinders with Tensile Strength < 1,100 MPa
ISO 11439	Gas cylinders — High pressure cylinders for the on-board storage of natural gas as a fuel for automotive vehicles
NACE Standard[6]	
NACE TM0177-90	Laboratory Testing of Metals for Resistance to Sulphide Stress Cracking in H_2S Environments
ECE Regulations[7]	
Regulation No. 10	Uniform provisions concerning the approval of vehicles with regard to electromagnetic compatibility
USA Federal Regulations[8]	
49 CFR 393.67	Liquid fuel tanks
SAE Standards[9]	
SAE J2343-2008	Recommended Practice for LNG Medium and Heavy-Duty Powered Vehicles

[6] National Association of Corrosion Engineers.
[7] United Nations Economic Commission for Europe; Regulations.
[8] United States of America Federal Regulations
[9] Society of Automotive Engineers

3. Classification of components

Class 0 High pressure parts including tubes and fittings containing CNG at a pressure higher than 3 MPa and up to 26 MPa.

Class 1 Medium pressure parts including tubes and fittings containing CNG at a pressure higher than 450 kPa and up to 3,000 kPa (3 MPa).

Class 2 Low pressure parts including tubes and fittings containing CNG at a pressure higher than 20 kPa and up to 450 kPa.

Class 3 Medium pressure parts as safety valves or protected by safety valve including tubes and fittings containing CNG at a pressure higher than 450 kPa and up to 3,000 kPa (3 MPa).

Class 4 Parts in contact with gas subject to the pressure lower than 20 kPa.

Class 5 Parts in contact with temperature range extending below -40 °C.

A component can consist of several parts, each part classified in its own class with regard to maximum working pressure and function.

CNG and/or LNG components for use in vehicles shall be classified with regard to the working pressure, temperature and function, according to Figure 1-1.

Figure 1-1
Flow scheme for CNG and/or LNG components classification

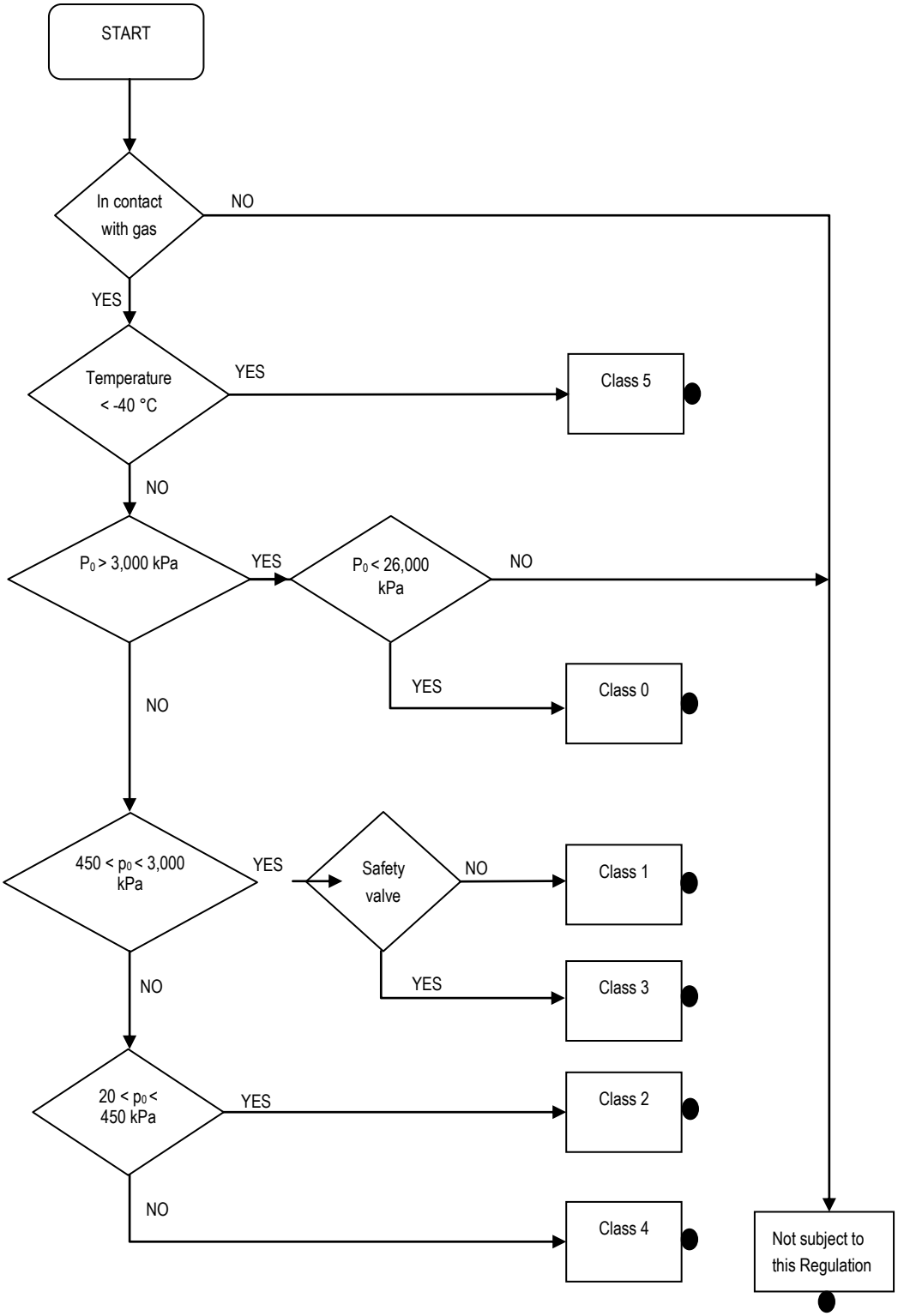

Figure 1-2
Tests applicable to specific classes of components (excluding CNG cylinders and LNG tank)

Test	*Class 0*	*Class 1*	*Class 2*	*Class 3*	*Class 4*	*Class 5*	*Annex*
Overpressure or strength	X	X	X	X	O	X	5A
External leakage	X	X	X	X	O	X	5B
Internal leakage	A	A	A	A	O	A	5C
Durability tests	A	A	A	A	O	A	5L
CNG/LNG compatibility	A	A	A	A	A	A	5D
Corrosion resistance	X	X	X	X	X	A	5E
Resistance to dry heat	A	A	A	A	A	A	5F
Ozone ageing	A	A	A	A	A	A	5G
Burst/destructive tests	X	O	O	O	O	A	5M
Temperature cycle	A	A	A	A	O	A	5H
Pressure cycle	X	O	O	O	O	A	5I
Vibration resistance	A	A	A	A	O	A	5N
Operating temperatures	X	X	X	X	X	X	5O
LNG low temperature	O	O	O	O	O	X	5P

X = Applicable
O = Not applicable
A = As applicable

4. Definitions

4.1. "*Pressure*" means relative pressure versus atmospheric pressure, unless otherwise stated.

4.2. "*Service pressure*" or *"Operating pressure"* means the settled pressure at a uniform gas temperature of 15 °C. Service pressure for LNG means the intended settled pressure of the tank in use –as declared by the manufacturer.

4.3. "*Test pressure*" means the pressure to which a component is taken during acceptance testing. For LNG tank the economizer pressure setting, or normal saturation pressure of LNG required by the engine. For the CNG cylinder the pressure at which the cylinder is hydrostatically tested.

4.4. "*Working pressure*" means the maximum pressure to which a component is designed to be subjected to and which is the basis for determining the strength of the component under consideration. For CNG cylinder, the settled pressure of 20 MPa at a uniform temperature of 15 °C. For LNG tank, the pressure of the LNG tank primary relief valve setting.

4.5. "*Operating temperatures*" means maximum values of the temperature ranges, indicated in Annex 5O, at which safe and good functioning of the specific component is ensured and for which it has been designed and approved.

4.6. "*Specific components*" means:

(a) Container (cylinder or tank);

(b) Accessories fitted to the container;

(c) Pressure regulator;

(d) Automatic valve;

(e) Manual valve;

(f) Gas supply device;

(g) Gas flow adjuster;

(h) Flexible fuel line;

(i) Rigid fuel line;

(j) Filling unit or receptacle;

(k) Non-return valve or check valve;

(l) Pressure relief valve (discharge valve) primary and secondary;

(m) Pressure relief device (temperature triggered);

(n) Filter;

(o) Pressure or temperature sensor / indicator;

(p) Excess flow valve;

(q) Service valve;

(r) Electronic control unit;

(s) Gas-tight housing;

(t) Fitting;

(u) Ventilation hose;

(v) Pressure relief device (PRD) (pressure triggered);

(w) Fuel rail;

(x) Heat exchanger/vaporizer;

(y) Natural gas detector;

(z) Fuel pump (for LNG).

4.7. *"Multi-functional component"* means any of the above mentioned specific components combined or fitted together as a component.

4.8. *"Approval of a vehicle"* means the approval of a vehicle type of categories M and N with regard to its CNG and/or LNG system as original equipment for the use in its propulsion system.

4.9. *"Vehicle type"* means vehicles fitted with specific components for the use of CNG and/or LNG in their propulsion system which does not differ with respect to the following conditions:

4.9.1. The manufacturer,

4.9.2. The type designation established by the manufacturer,

4.9.3. The essential aspects of design and construction:

4.9.3.1. Chassis/floor pan (obvious and fundamental differences),

4.9.3.2. The installation of the CNG and/or LNG equipment (obvious and fundamental differences).

4.10. *"CNG system"* means an assembly of components (container(s) or cylinder(s), valves, flexible fuel lines, etc.) and connecting parts (rigid fuel lines, pipes fitting, etc.) fitted on motor vehicles using CNG in their propulsion system.

4.11. *"LNG system"* means an assembly of components (tanks, valves, flexible fuel lines, etc.) and connecting parts (fuel lines, fittings, etc.) fitted on motor vehicles using LNG in their propulsion system and related components up to and including the vaporizer. Other parts downstream from the vaporizer shall be considered as CNG components.

4.12. *"Container"* (or cylinder) means any storage system used for compressed natural gas.

4.13. *"Type of container"* means containers which do not differ in respect of the dimensional and material characteristics as specified in Annex 3A.

4.13.1. A container can be:

CNG-1 metal.

CNG-2 metal liner reinforced with resin impregnated continuous filament (hoop wrapped).

CNG-3 metal liner reinforced with resin impregnated continuous filament (fully wrapped).

CNG-4 resin impregnated continuous filament with a non-metallic liner (all composite).

4.14. *"Tank"* (or vessel) means any storage system used for liquefied natural gas.

4.15. *"Type of tank"* means tanks that do not differ in respect of the dimensional and material characteristics as specified in Annex 3B.

4.16. *"Accessories fitted to the container or tank"* means the following components (but not limited to them), either separate or combined, when fitted to the container or tank.

4.16.1. *"Manual valve"* means valve which is operated manually.

4.16.2. *"Pressure sensor/indicator"* means a pressurized device which indicates the gas or liquid pressure.

4.16.3. *"Excess flow valve"* means valve which automatically shuts off or limits, the gas flow when the flow exceeds a set design value.

4.16.4. *"Gas-tight housing"* means a device that vents gas leakage to outside the vehicle including the gas ventilation hose.

4.17. *"Valve"* means a device by which the flow of a fluid may be controlled.

4.18. *"Automatic valve"* means a valve that is not operated manually.

4.19. *"Automatic cylinder valve"* means an automatic valve rigidly fixed to the cylinder that controls the flow of gas to the fuel system. The automatic cylinder valve is also called remote-controlled service valve.

4.20. *"Non-return valve or check valve"* means an automatic valve that allows gas/fluid to flow in only one direction.

4.21. *"Excess flow valve"* (excess flow limiting device) means a device that automatically shuts off, or limits, the gas or liquid flow when the flow exceeds a set design value.

4.22. *"Manual valve"* means a manual valve rigidly fixed to the cylinder or tank.

4.23. *"Pressure relief valve (discharge valve)"* means a device that prevents a pre-determined upstream pressure being exceeded.

4.24. *"Service valve"* means an isolation valve that is closed only when servicing the vehicle.

4.25. *"Filter"* means a protective screen that removes foreign debris from the gas or liquid stream.

4.26. *"Fitting"* means a connector used in a piping, tubing, or hose system.

4.27. *"LNG fuel pump"* means a device to establish the supply of LNG to the engine by increasing the pressure of the fluid (liquid or vapour).

4.28. *"Flexible fuel lines"* means flexible tubing or hose through which natural gas flows.

4.29. *"Rigid fuel lines"* means tubing that has not been designed to flex in normal operation and through which natural gas flows.

4.30. *"Gas supply device"* means a device for introducing gaseous fuel into the engine intake manifold (carburettor or injector).

4.31. *"Gas/air mixer"* means a device for mixing the gaseous fuel and intake air for the engine.

4.32. *"Gas injector"* means a device for introducing gaseous fuel into the engine or associated intake system.

4.33. *"Gas flow adjuster"* means a gas flow restricting device, installed downstream of a pressure regulator, controlling gas flow to the engine.

4.34. *"Pressure regulator"* means a device used to control the pressure of CNG or LNG.

4.35. *"Pressure relief device (PRD) (temperature triggered)"* means a one-time use device triggered by excessive temperature and/or pressure which vents gas to protect the cylinder from rupture.

4.36. *"Pressure relief device (PRD) (pressure triggered)"* (this device sometimes is referred to as "burst disc")"means a one-time use device triggered by excessive pressure that prevents a pre-determined upstream pressure being exceeded.

4.37. *"Filling unit or receptacle"* means a device fitted in the vehicle used to fill the container or tank in the filling station.

4.38. *"Electronic control unit (CNG/LNG)"* means a device that controls the gas demand of the engine, and other engine parameters, and cuts off automatically the automatic valve, required by safety reason.

4.39. *"Type of components"* as mentioned in paragraphs 4.17. to 4.38. (above) means components that do not differ in such essential respect as materials, working pressure and operating temperatures.

4.40. *"Type of electronic control unit"* as mentioned in paragraph 4.38. means components that do not differ in such essential respect as the basic software principles excluding minor changes.

4.41. *"Heat exchanger/Vaporizer"* means a device used to change the state of LNG into CNG.

4.42. *"Liquefied Natural Gas (LNG)"* also called "Liquid Natural Gas" means a cryogenic liquid produced by reducing the temperature of natural gas to about -161.7 °C at atmospheric pressure and stored for use as a vehicle fuel.

4.43. *"Compressed Natural Gas (CNG)"* means natural gas that has been compressed and stored for use as a vehicle fuel.

4.44. *"Boil-off"* means gas created by evaporation of LNG due to ambient heat input.

4.45. *"Venting"* means the discharge of vapours out of the storage container/tank.

4.46. *"Venting system"* means a system that controls the release of natural gas from the LNG storage system.

4.47. *"Auto-frettage"* means a pressure application procedure used in manufacturing composite cylinders with metal liners, which strains the liner past its limit of elasticity, sufficiently to cause permanent plastic deformation which results in the liner having compressive stresses and the fibres having tensile stresses at zero internal pressure.

4.48. *"Auto-frettage pressure"* means the pressure within the over-wrapped cylinder at which the required distribution of stresses between the liner and the over-wrap is established.

4.49. *"Batch - composite cylinders"* means a "batch" i.e. a group of cylinders successively produced from qualified liners having the same size, design, specified materials of construction and process of manufacture.

4.50. *"Batch - metal cylinders and liners"* means a "batch" i.e. a group of metal cylinders or liners successively produced having the same nominal diameter, wall thickness, design, specified material of construction, process of manufacture, equipment for manufacture and heat treatment, and conditions of time, temperature and atmosphere during heat treatment.

4.51. *"Batch non-metallic liners"* means a "batch" i.e. a group of non-metallic liners successively produced having the same nominal diameter, wall thickness, design specified material of construction and process of manufacture.

4.52. *"Batch limits"* means in no case a "batch" shall be permitted to exceed 200 finished cylinders or liners (not including destructive test cylinders or liners), or one shift of successive production, whichever is greater.

4.53. *"Composite cylinder"* means a cylinder made of resin impregnated continuous filament wound over a metallic or non-metallic liner. Composite cylinders using non-metallic liners are referred to as all-composite cylinders.

4.54. *"Controlled tension winding"* means a process used in manufacturing hoop wrapped composite cylinders with metal liners by which compressive stresses in the liner and tensile stresses in the over-wrap at zero internal pressure are obtained by winding the reinforcing filaments under significant high tension.

4.55. *"Filling pressure"* means the gas pressure in the cylinder immediately upon completion of filling.

4.56. *"Finished cylinders"* means completed cylinders that are ready for use, typical of normal production, complete with identification marks and external coating including integral insulation specified by the manufacturer, but free from non-integral insulation or protection.

4.57. *"Full-wrap"* means an over-wrap having a filament wound reinforcement both in the circumferential and axial direction of the cylinder.

4.58. *"Gas temperature"* means the temperature of gas in a cylinder.

4.59. *"Hoop-wrap"* means an over-wrap having a filament wound reinforcement in a substantially circumferential pattern over the cylindrical portion of the liner so that the filament does not carry any significant load in a direction parallel to the cylinder longitudinal axis.

4.60. *"Liner"* means a container that is used as a gas-tight, inner shell, on which reinforcing fibres are filament wound to reach the necessary strength. Two types of liners are described in this standard: Metallic liners that are designed to share the load with the reinforcement, and non-metallic liners that do not carry any part of the load.

4.61. *"Manufacturer"* means the person or organization responsible for the design, fabrication and testing of CNG or LNG specific components.

4.62. *"Maximum developed pressure"* means the settled pressure developed when gas in a cylinder filled to the working pressure is raised to the maximum service temperature.

4.63. *"Over-wrap"* means the reinforcement system of filament and resin applied over the liner.

4.64. *"Pre-stressing"* means the process of applying auto-frettage or controlled tension winding.

4.65. *"Service life"* means the life in years during which the cylinders may safely be used in accordance with the standard service conditions.

4.66. *"Settled pressure"* means the gas pressure when a given settled temperature is reached.

4.67. *"Settled temperature"* means the uniform gas temperature after any change in temperature caused by filling has dissipated.

4.68. *"LNG trapping"* means the containment of LNG in an enclosure of constant volume.

4.69. *"Cryogenic temperature"* for the purpose of this Regulation means temperatures below -40 °C.

4.70. *"Inner vessel or inner tank"* means part of the fuel tank that contains LNG.

4.71. *"Outer vessel or outer jacket"* means part of the fuel tank that encases the inner vessel or inner tank(s) and its insulation system.

4.72. *"Fuel rail"* means the pipe or duct that connects the fuel injection devices.

4.73. *"LNG nozzle"* means device which permits quick connection and disconnection of fuel supply hose to the LNG receptacle in a safe manner.

4.74. *"LNG filling receptacle"* means device connected to a vehicle or storage system which receives the LNG fuelling nozzle and permits safe transfer of fuel. The receptacle consists as minimum from a receptacle body and from a check valve mounted inside the body.

Part I

Approval of specific components of motor vehicles using compressed natural gas (CNG) and/or liquefied natural gas (LNG) in their propulsion system

5. Application for approval

5.1. The application for approval of specific component or multifunctional component shall be submitted by the holder of the trade name or mark or by his duly accredited representative.

5.2. It shall be accompanied by the under-mentioned documents in triplicate and by the following particulars:

5.2.1. Description of the vehicle comprising all the relevant particulars referred to in Annex 1A to this Regulation;

5.2.2. A detailed description of the type of the specific component or multifunctional components;

5.2.3. A drawing of the specific component or multifunctional components, sufficiently detailed and on an appropriate scale;

5.2.4. Verification of compliance with the specifications prescribed in paragraph 8. of this Regulation.

5.3. At the request of the Technical Service responsible for conducting approval tests, samples of the specific component or multifunctional components shall be provided. Supplementary samples shall be supplied upon request (3 maximum).

5.3.1. During pre-production of containers, [n][10] containers of each 50 pieces (lot of qualification) shall be subject to non-destructive tests of Annex 3A. For LNG tanks see Annex 3B.

6. Markings

6.1. The sample of specific component or multifunctional components submitted for approval shall bear the trade name or mark of the manufacturer and the type, including one concerning designation on operating temperatures ("M" or "C" for moderate or cold temperatures "L" for LNG as appropriate); and for flexible hoses also the manufacturing month and year; this marking shall be clearly legible and indelible.

6.2. All components shall have a space large enough to accommodate the approval mark; this space shall be shown on the drawings referred to in paragraph 5.2.3. above.

6.3. Every container shall also bear a marking plate with the following data clearly legible and indelible:

[10] [n] stands for the sample size and shall be determined by the Type Approval Authority .

(a) A serial number;

(b) The capacity in litres;

(c) The marking "CNG";

(d) Operating pressure/test pressure [MPa];

(e) Mass (kg);

(f) Year and month of approval (e.g. 96/01);

(g) Approval mark according to paragraph 7.4.

6.4. Every tank shall also bear a marking plate with the following data clearly legible and indelible:

(a) Serial number;

(b) Gross capacity in litres;

(c) The marking "LNG";

(d) Service pressure/Working pressure [MPa];

(e) Mass (kg);

(f) Manufacturer;

(g) Year and month of approval (e.g. 96/01);

(h) The marking "PUMP INSIDE, Pump Delivery Pressure *** MPa" if the LNG fuel pump is mounted on the tank; where the *** is the value of the pump delivery pressure;

(i) Approval mark according to paragraph 7.4. below.

7. Approval

7.1. If the CNG component samples submitted for approval meet the requirements of paragraphs 8.1. to 8.11. of this Regulation, approval of the type of component shall be granted.

If the LNG components samples submitted for approval meet the requirements of paragraphs 8.12. to 8.21. of this Regulation, approval of the type of component shall be granted.

7.2. An approval number shall be assigned to each type of component or multifunctional component approved. Its first two digits (at present 01 corresponding to the 01 series of amendments) shall indicate the series of amendments incorporating the most recent major technical amendments made to the Regulation at the time of issue of the approval. The same Contracting Party shall not assign the same alphanumeric code to another type of component.

7.3. Notice of approval or of refusal or of extension of approval of a CNG or LNG component type pursuant to this Regulation shall be communicated to the Parties to the Agreement applying this Regulation, by means of a form conforming to the model in Annex 2B to this Regulation.

7.4. There shall be affixed, conspicuously and in the space referred to in paragraph 6.2. above, to all components conforming to a type approved under this Regulation, in addition to the mark prescribed in paragraphs 6.1. and 6.3. (CNG) and 6.4. (LNG), an international approval mark consisting of:

7.4.1. A circle surrounding the letter "E" followed by the distinguishing number of the country which has granted approval.[11]

7.4.2. The number of this Regulation, followed by the letter "R", a dash and the approval number to the right of the circle prescribed in paragraph 7.4.1. above. This approval number consists of the component type approval number which appears on the certificate completed for this type (see paragraph 7.2. above and Annex 2B) preceded by two figures indicating the sequence of the latest series of amendments to this Regulation.

7.5. The approval mark shall be clearly legible and be indelible.

7.6. Annex 2A to this Regulation gives examples of the arrangement of the aforesaid approval mark.

8. Specifications on CNG and/or LNG components

8.1. General provisions

8.1.1. The specific components of vehicles using CNG and/or LNG in their propulsion system shall function in a correct and safe way as specified in this Regulation.

The materials of the components that are in contact with CNG/LNG shall be compatible with them (see Annex 5D).

Those parts of components whose correct and safe functioning is liable to be influenced by CNG/LNG, high pressure or vibrations has to be submitted to relevant test procedures described in the annexes to this Regulation. In particular the provisions of paragraphs 8.2. to 8.11. are to be fulfilled for CNG components. For LNG components, the provisions of paragraphs 8.12. to 8.21. shall be fulfilled.

The specific components of vehicles using CNG/LNG in their propulsion system shall comply with relevant electromagnetic compatibility (EMC) requirements according to Regulation No. 10, 03 series of amendments, or equivalent.

8.2. Provisions on CNG containers

8.2.1. The CNG containers shall be type approved pursuant to the provisions laid down in Annex 3A to this Regulation.

8.3. Provisions on components fitted to the CNG container

8.3.1. The CNG container shall be equipped at least with the following components, which may be either separate or combined:

[11] The distinguishing numbers of the Contracting Parties to the 1958 Agreement are reproduced in Annex 3 to the Consolidated Resolution on the Construction of Vehicles (R.E.3), document ECE/TRANS/WP.29/78/Rev.3, Annex 3 - www.unece.org/trans/main/wp29/wp29wgs/wp29gen/wp29resolutions.html

8.3.1.1. Manual valve,

8.3.1.2. Automatic cylinder valve,

8.3.1.3. Pressure relief device,

8.3.1.4. Excess flow limiting device.

8.3.2. The CNG container may be equipped with a gas-tight housing, if necessary.

8.3.3. The components mentioned in paragraphs 8.3.1. to 8.3.2. above shall be type approved pursuant to the provisions laid down in Annex 4 to this Regulation.

8.4.-8.11. Provisions on other CNG components

The components shown shall be type approved pursuant to the provisions laid down in the annexes which can be determined from the table below:

Paragraph	*Component*	*Annex*
8.4.	Automatic valve Check valve or non-return valve Pressure relief valve Pressure relief device (temperature triggered) Excess flow valve Pressure relief device (pressure triggered)	4A
8.5.	Flexible fuel line-hose	4B
8.6.	CNG filter	4C
8.7.	Pressure regulator	4D
8.8.	Pressure and temperature sensors	4E
8.9.	Filling unit or receptacle	4F
8.10.	Gas flow adjuster and gas/air mixer, injector or fuel rail	4G
8.11.	Electronic control unit	4H

8.12. Provisions on LNG tanks

8.12.1. The LNG tanks shall be type approved pursuant to the provisions laid down in Annex 3B to this Regulation.

8.12.2. A system shall be provided for preventing the fuel tank from being overfilled.

8.13. Provisions on components fitted to the LNG tank

8.13.1. The LNG tank shall be equipped at least with the following components, which may be either separate or combined (special care shall be taken to prevent LNG trapping):

8.13.1.1. Pressure relief valve;

8.13.1.2. Manual valve;

8.13.1.3. Automatic valve;

8.13.1.4. Excess flow device.

8.13.2. The tank may be equipped with a gas-tight housing, if necessary.

8.13.3. The components mentioned in paragraphs 8.13.1.1. to 8.13.1.4. above shall be type approved pursuant to the provisions laid down in Annex 4 to this Regulation.

8.14.-8.22. Provisions regarding other LNG components

The components shown shall be type approved pursuant to the provisions laid down in the annexes which can be determined from the table below:

Paragraph	*Component*	*Annex*
8.15.	LNG heat exchanger – vaporizer	4I
8.16.	LNG filling receptacle	4J
8.17.	Pressure control regulator	4K
8.18.	LNG Pressure and/or temperature sensor/indicator	4L
8.19.	Natural gas detector	4M
8.20.	Automatic valve, check valve, the pressure relief valve, excess flow valve, manual valve and non-return valve.	4N
8.21.	Fuel pump	4O
8.22.	Electronic control unit	4H

9. Modifications of a type of CNG and/or LNG component and extension of approval

9.1. Every modification of a type of CNG and/or LNG component shall be notified to the Type Approval Authority that granted the type-approval. The Type Approval Authority may then either:

9.1.1. Consider that the modifications made are unlikely to have an appreciable adverse effect, and that the component still complies with the requirements; or,

9.1.2. Determine whether partial or complete retesting has to be established by the Type Approval Authority.

9.2. Confirmation or refusal of approval, specifying the alterations, shall be communicated by the procedure specified in paragraph 7.3. above to the Parties to the Agreement that apply this Regulation.

9.3. The Type Approval Authority issuing the extension of approval shall assign a series number to each communication form drawn up for such an extension.

10. (Not allocated)

11. Conformity of production

The conformity of production procedures shall comply with those set out in the Agreement, Appendix 2 (E/ECE/324-E/ECE/TRANS/505/Rev.2) with the following requirements:

11.1. Every CNG container shall be tested at a minimum pressure of 1.5 times the working pressure in conformity with the prescriptions of Annex 3A to this Regulation.

Every LNG tank shall be tested at a minimum pressure of 1.3 times (the working pressure plus 0.1 MPa) with the prescriptions of Annex 3B to this Regulation.

11.2. For CNG containers burst testing under hydraulic pressure according to paragraph A.12. of Appendix A to Annex 3A shall be carried out for each lot consisting of maximum 200 containers manufactured with the same lot of raw material.

11.3. Every flexible fuel line assembly that is applied in the high and medium pressure (Class 0, 1 and 5) according to the classification, as described in paragraph 3. of this Regulation, shall be tested at the pressure twice the working pressure.

12. Penalties for non-conformity of production

12.1. The approval granted in respect of a type of components pursuant to this Regulation may be withdrawn if the requirements laid down in paragraph 11. above are not complied with.

12.2. If a Party to the Agreement applying this Regulation withdraws an approval it has previously granted, it shall forthwith so notify the other Contracting Parties applying this Regulation by means of a communication form conforming to the model in Annex 2B to this Regulation.

13. (Not allocated)

14. Production definitively discontinued

If the holder of the approval completely ceases to manufacture a type of component approved in accordance with this Regulation, he shall so inform the Type Approval Authority that granted the approval. Upon receiving the relevant communication, that Authority shall inform the other Parties to the Agreement applying this Regulation by means of a communication form conforming to the model in Annex 2B to this Regulation.

15. Names and addresses of Technical Services responsible for conducting approval tests, and of Type Approval Authorities

The Parties to the Agreement applying this Regulation shall communicate to the United Nations Secretariat the names and addresses of the Technical Services responsible for conducting approval tests and of the Type Approval Authority that grant approval and to which forms certifying approval or extension or refusal or withdrawal of approval, issued in other countries, are to be sent.

Part II

Approval of vehicles with regard to the installation of specific components of an approved type for the use of compressed natural gas (CNG) and/or liquefied natural gas (LNG) in their propulsion system

16. Application for approval

16.1. The application for approval of a vehicle type with regard to the installation of specific components for the use of compressed natural gas (CNG) and or liquefied natural gas (LNG) in its propulsion system shall be submitted by the vehicle manufacturer or by his duly accredited representative.

16.2. It shall be accompanied by the under-mentioned documents in triplicate: description of the vehicle comprising all the relevant particulars referred to in Annex 1B to this Regulation.

16.3. A vehicle representative of the vehicle type to be approved shall be submitted to the Technical Service conducting the approval tests.

17. Approval

17.1. If the vehicle submitted for approval pursuant to this Regulation is equipped with all the necessary specific components for the use of compressed natural gas (CNG) and/or liquefied natural gas (LNG) in its propulsion system and meets the requirements of paragraph 18. below, approval of that vehicle type shall be granted.

17.2. An approval number shall be assigned to each type of vehicle approved. Its first two digits shall indicate the series of amendments incorporating the most recent major technical amendments made to the Regulation at the time of issue of the approval.

17.3. Notice of approval or of refusal or of extension of approval of a CNG and/or LNG vehicle type pursuant to this Regulation shall be communicated to the Parties to the Agreement applying this Regulation, by means of a form conforming to the model in Annex 2D to this Regulation.

17.4. There shall be affixed, conspicuously and in a readily accessible space specified on the approval form referred to in paragraph 17.2. above, to every vehicle type approved under this Regulation an international approval mark consisting of:

17.4.1. A circle surrounding the letter "E" followed by the distinguishing number of the country which has granted approval; [12]

[12] The distinguishing numbers of the Contracting Parties to the 1958 Agreement are reproduced in Annex 3 to the Consolidated Resolution on the Construction of Vehicles (R.E.3), document ECE/TRANS/WP.29/78/Rev.3, Annex 3 - www.unece.org/trans/main/wp29/wp29wgs/wp29gen/wp29resolutions.html.

17.4.2. The number of this Regulation, followed by the letter "R", a dash and the approval number to the right of the circle prescribed in paragraph 17.4.1. above.

17.5. If the vehicle conforms to a vehicle approved, under one or more other Regulations annexed to the Agreement, in the country that has granted approval under this Regulation, the symbol prescribed in paragraph 17.4.1. need not be repeated; in such case, the Regulation and approval numbers and the additional symbols of all the Regulations under which approval has been granted in the country which has granted approval under this Regulation shall be placed in vertical columns to the right of the symbol prescribed in paragraph 17.4.1. above.

17.6. The approval mark shall be clearly legible and be indelible.

17.7. The approval mark shall be placed close to or on the vehicle data plate.

17.8. Annex 2C to this Regulation gives examples of the arrangement of the aforesaid approval mark.

18. Requirements for the installation of specific components for the use of compressed natural gas and/or liquefied natural gas in the propulsion system of a vehicle

18.1. General

18.1.1. The CNG and/or LNG system of the vehicle shall function in a good and safe manner at the working pressure and operating temperatures for which it has been designed and approved.

18.1.2. All components of the system shall be type approved as individual parts or multifunctional parts pursuant to Part I of this Regulation.

18.1.2.1. Notwithstanding the provisions of paragraph 18.1.2. above, no separate type approval of the CNG/LNG electronic control unit is required if the CNG/LNG electronic control unit is integrated into the engine electronic control unit and is covered with a vehicle installation type approval according to Part II of this Regulation and to Regulation No. 10. The vehicle type approval shall also be pursuant to the applicable provisions laid down in Annex 4H of this Regulation.

18.1.3. The materials used in the system shall be suitable for use with CNG and/or LNG as applicable.

18.1.4. All components of the system shall be fastened in a proper way.

18.1.5. The CNG and/or LNG system shall be pressurized at the working pressure and tested for leakage with a surface active agent without formation of bubbles for three minutes or by using a demonstrated equivalent method.

18.1.6. The CNG and/or LNG system shall be installed such that is has the best possible protection against damage, such as damage due to moving vehicle components, collision, grit or due to the loading or unloading of the vehicle or the shifting of those loads.

18.1.7. No appliances shall be connected to the CNG and/or LNG system other than those strictly required for the proper operation of the engine of the motor vehicle.

18.1.7.1. Notwithstanding the provisions of paragraph 18.1.7., vehicles may be fitted with a heating system to heat the passenger compartment and/or the load area which is connected to the CNG and/or LNG system.

18.1.7.2. The heating system referred to in paragraph 18.1.7.1. shall be permitted if, in the view of the Technical Services responsible for conducting type approval, the heating system is adequately protected and the required operation of the normal CNG and/or LNG system is not affected.

18.1.8. Identification of CNG- and/or LNG fuelled vehicles

18.1.8.1. Vehicles of categories M_2 and M_3 equipped with a CNG system shall be labelled as specified in Annex 6.

18.1.8.2. Vehicles of categories M_2 and M_3 equipped with a LNG system shall be labelled as specified in Annex 7.

18.1.8.3. The label shall be installed on the front and rear of the vehicle of category M_2 or M_3 and on the outside of the doors on the right-hand side (left hand drive vehicles), left-hand side (right hand drive vehicles).

18.1.8.4. A label shall be placed adjacent to the LNG fill receptacle stating the fuelling requirements. The fuelling requirements shall be as recommended by the manufacturer.

18.2. Further requirements

18.2.1. No component of the CNG and/or LNG system, including any protective materials which form part of such components, shall project beyond the outline of the vehicle, with the exception of the filling unit if this does not project more than 10 mm beyond its point of attachment.

18.2.2. Proper shielding against heat of adjacent components shall be considered and no component of the CNG and/or LNG system shall be located within 100 mm of the exhaust or similar heat source, unless such components are adequately shielded against heat.

18.3. The CNG system

18.3.1. A CNG system shall contain at least the following components:

18.3.1.1. Container(s) or cylinder(s);

18.3.1.2. Pressure indicator or fuel level indicator;

18.3.1.3. Pressure relief device (temperature triggered);

18.3.1.4. Automatic cylinder valve;

18.3.1.5. Manual valve;

18.3.1.6. Pressure regulator;

18.3.1.7. Gas flow adjuster;

18.3.1.8. Excess flow limiting device;

18.3.1.9. Gas supply device;

18.3.1.10. Filling unit or receptacle;

18.3.1.11. Flexible fuel line;

18.3.1.12. Rigid fuel line;

18.3.1.13. Electronic control unit;

18.3.1.14. Fittings;

18.3.1.15. Gas-tight housing for those components installed inside the luggage and passenger compartment. If the gas-tight housing will be destroyed in case of fire, the pressure relief device may be covered by the gas-tight housing.

18.3.2. The CNG system may also include the following components:

18.3.2.1. Non-return valve or check valve;

18.3.2.2. Pressure relief valve;

18.3.2.3. CNG filter;

18.3.2.4. Pressure and/or temperature sensor;

18.3.2.5. Fuel selection system and electrical system;

18.3.2.6. PRD (pressure triggered);

18.3.2.7. Fuel rail.

18.3.3. An additional automatic valve may be combined with the pressure regulator.

18.3.4. The LNG system shall contain at least the following components:

18.3.4.1. LNG tank(s) or vessel(s);

18.3.4.2. LNG heat exchanger / vaporizer;

18.3.4.3. LNG pressure relief valve;

18.3.4.4. LNG venting system;

18.3.4.5. LNG receptacle;

18.3.4.6. LNG excess flow valve (excess flow limiting device);

18.3.4.7. LNG valve (manual);

18.3.4.8. LNG fuel line;

18.3.4.9. LNG couplings;

18.3.4.10. LNG check valve or non-return valve;

18.3.4.11. LNG pressure indicator or fuel indicator;

18.3.4.12. Electronic control unit;

18.3.4.13. Natural gas detector or gas tight housing, for category M vehicles.

18.3.5. The LNG system may also include the following components:

18.3.5.1. LNG pressure regulator;

18.3.5.2. LNG pressure and/or temperature sensor;

18.3.5.3. LNG fuel pump;

18.3.5.4. LNG level gauge;

18.3.5.5. LNG automatic valve;

18.3.5.6. Natural gas detector;

18.3.5.7. Gas tight housing.

18.3.6. LNG vehicles components downstream of the heat exchanger/vaporizer (gaseous phase) shall be considered as CNG components.

18.4. Installation of the container and/or tanks

18.4.1. The container and/or tank shall be permanently installed in the vehicle and shall not be installed in the engine compartment.

18.4.2. The container and/or tank shall be installed such that there is no metal to metal contact, with the exception of the fixing points of the container(s) and/or tank(s).

18.4.3. When the vehicle is ready for use the fuel container and/or tank shall not be less than 200 mm above the road surface.

18.4.3.1. The provisions of paragraph 18.4.3. shall not apply if the container and/or tank is adequately protected, at the front and the sides and no part of the container is located lower than this protective structure.

18.4.4. The fuel container(s) and/or tank(s) shall be mounted and fixed so that the following accelerations can be absorbed (without damage occurring) when the container(s) and/or tank(s) are full:

Vehicles of categories M_1 and N_1:

(a) 20 g in the direction of travel;

(b) 8 g horizontally perpendicular to the direction of travel.

Vehicles of categories M_2 and N_2:

(a) 10 g in the direction of travel;

(b) 5 g horizontally perpendicular to the direction of travel.

Vehicles of categories M_3 and N_3:

(a) 6.6 g in the direction of travel;

(b) 5 g horizontally perpendicular to the direction of travel.

A calculation method can be used instead of practical testing if its equivalence can be demonstrated by the applicant for approval to the satisfaction of the Technical Service.

18.5. Accessories fitted to the CNG container(s)

18.5.1. Automatic valve

18.5.1.1. An automatic cylinder valve shall be installed directly on each CNG container.

18.5.1.2. The automatic cylinder valve shall be operated such that the fuel supply is cut off when the engine is switched off, irrespective of the position of the ignition switch, and shall remain closed while the engine in not running. A delay of 2 seconds is permitted for diagnostic.

18.5.2. Pressure relief device

18.5.2.1. The pressure relief device (temperature triggered) shall be fitted to the CNG fuel container(s) in such a manner that can discharge into the gas-tight housing if that gas-tight housing fulfils the requirements of paragraph 18.5.5. below.

18.5.3. Excess flow valve on the CNG container

18.5.3.1. The excess flow limiting device shall be fitted in the CNG fuel container(s) on the automatic cylinder valve.

18.5.4. Manual valve

18.5.4.1. A manual valve is rigidly fixed to the CNG cylinder which can be integrated into the automatic cylinder valve.

18.5.5. Gas-tight housing on the CNG container(s)

18.5.5.1. A gas-tight housing over the CNG container(s) fittings, which fulfils the requirements of paragraphs 18.5.5.2. to 18.5.5.5. shall be fitted to the CNG fuel container, unless the CNG container(s) is installed outside the vehicle.

18.5.5.2. The gas-tight housing shall be in open connection with the atmosphere, where necessary through a connecting hose and a lead-through that shall be resistant against CNG.

18.5.5.3. The ventilation opening of the gas tight housing shall not discharge into a wheel arch, nor shall it be aimed at a heat source such as the exhaust.

18.5.5.4. Any connecting hose and lead-through in the bottom of the bodywork of the motor vehicle for ventilation of the gas-tight housing shall have a minimum clear opening of 450 mm^2.

18.5.5.5. The housing over the CNG container(s) fittings and connecting hoses shall be gas-tight at a pressure of 10 kPa without any permanent deformations. In these circumstances a leak not exceeding 100 cm^3 per hour may be accepted.

18.5.5.6. The connecting hose shall be secured by clamps, or other means, to the gas-tight housing and the lead-through to ensure that a gas-tight joint is formed.

18.5.5.7. The gas-tight housing shall contain all the components installed into the luggage or passenger compartment.

18.5.6. PRD (pressure triggered)

18.5.6.1. The PRD (pressure triggered) shall be activated and shall vent the gas independently from the PRD (temperature triggered).

18.5.6.2. The PRD (pressure triggered) shall be fitted to the fuel container(s) in such a manner that it can discharge into the gas-tight housing if that gas-tight housing fulfils the requirements of paragraph 18.5.5. above.

18.6. Accessories fitted to the LNG tanks

18.6.1. Automatic valve

18.6.1.1. An automatic valve shall be installed in the fuel supply line, directly on every LNG tank (in a protected position).

18.6.1.2. The automatic valve shall be operated such that the fuel supply is cut off when the engine is switched off, irrespective of the position of the ignition switch, and shall remain closed while the engine is not running. A delay of 2 seconds is permitted for diagnostic.

18.6.2. Excess flow valve

The excess flow valve can be fitted inside or directly on the LNG tank (in a protected position).

18.6.3. Pressure relief valve (primary)

The primary pressure relief valve outlet shall be connected to an open ended pipe-away system to move vented gas away to a high level. Consideration shall be given to preventing any blockage or freezing of the pipe-away. The LNG primary relief valve shall not vent into the gas tight housing (if fitted).

18.6.4. Pressure relief valve (secondary)

The secondary relief valve may relieve gas immediately from its outlet. Protection from water ingress and damage shall be considered. The secondary relief valve outlet shall not be connected to the same pipe-away as the primary relief valve. The LNG secondary relief valve shall not vent into the gas tight housing (if fitted).

18.6.5. Manual fuel shut off valve

The manual fuel shut off valve shall be mounted directly on the LNG tank (in a protected position). It should be readily accessible. The manual fuel shut off valve can be integrated into the automatic valve.

18.6.6. Manual vapour shut off valve

The manual vapour shut off valve shall be mounted directly on the LNG tank (in a protected position). It should be readily accessible.

18.6.7. Vent line or connector

The vent line or connector may be mounted inside or on the LNG tank (in a protected position). It should be readily accessible. The vent connector shall be suitable for the purpose at temperatures indicated in Annex 5O for the working pressure of the LNG tank.

18.6.8. Venting management system

The primary pressure relief valve shall be piped to a vent stack which extends to a high level. The primary and secondary relief valve outlets shall be protected from fouling by dirt, debris, snow, ice and/or water. The vent stack shall be sized to prevent flow restriction due to pressure drop. Gas exiting the vent stack or secondary relieve valve shall not impinge on enclosed areas, other vehicles, exterior-mounted systems with air intake (i.e. air-conditioning systems), engine intakes, or engine exhaust. In the case of dual tanks, the primary relief valve outlets piping for each tank may be manifold to a common stack.

18.7. Rigid and flexible fuel lines

18.7.1. CNG rigid fuel lines shall be made of seamless material: either stainless steel or steel with corrosion-resistant coating.

18.7.1.1. LNG rigid fuel lines shall be made of austenitic stainless steel or copper, either seamless or welded.

18.7.2. The CNG rigid fuel line may be replaced by a flexible fuel line if used in Class 0, 1, or 2.

18.7.2.1. The LNG rigid fuel line may be replaced by a flexible fuel line if used in Class 5.

18.7.3. CNG and LNG flexible fuel line shall fulfil the relevant requirement of Annex 4B to this Regulation.

18.7.4. Rigid fuel lines shall be secured such that they shall not be subjected to vibration of stresses.

18.7.5. CNG and/or LNG flexible fuel lines shall be secured such that they shall not be subjected to vibration or stresses.

18.7.6. At the fixing point, the fuel line, flexible or rigid, shall be fitted in such a way that there is no metal to metal contact.

18.7.7. Rigid and flexible fuel gas line shall not be located at jacking points.

18.7.8. At passages the fuel lines shall be fitted with protective material.

18.7.9. LNG fuel line shall be insulated or protected in those areas where low temperature can damage other components and/or harm people.

18.8. Fitting or gas connections between the components

18.8.1. Soldered joints and bite-type compression joints are not permitted for CNG. Bite-type compression joints are not permitted for LNG.

18.8.2. Stainless steel tubes shall only be joined by stainless steel fittings.

18.8.3. Distributing-blocks for CNG shall be made of corrosion-resistant material.

18.8.4. Rigid fuel lines shall be connected by appropriate joints, for example, two-part compression joints in steel tubes and joints with olives tapered on both sides.

18.8.5. The number of joints shall be limited to a minimum.

18.8.6. Any joints shall be made in locations where access is possible for inspection.

18.8.7. In a passenger compartment or enclosed luggage compartment the fuel lines shall be no longer than reasonably required, and in any case shall be protected by a gas-tight housing.

18.8.7.1. The provisions of paragraph 18.8.7. shall not apply to vehicles of categories M_2 or M_3 where the fuel lines and connections are fitted with a sleeve that is resistant against CNG and that has an open connection to the atmosphere.

18.9. Automatic valve

18.9.1. For CNG systems an additional automatic valve may be installed in the fuel line as close as possible to the pressure regulator.

18.9.2. An automatic valve shall be installed as close as practicable after the vaporizer in the LNG system.

18.10. Filling unit or receptacle

18.10.1. The filling unit shall be secured against rotation and shall be protected against dirt and water.

18.10.2. When the CNG/LNG container or tank is installed in the passenger compartment or an enclosed (luggage) compartment the filling unit shall be located at the outside of the vehicle or in engine compartment.

18.10.3. For vehicles of classes M_1 and N_1 the CNG filling unit (receptacle) shall comply with the drawing specifications detailed in Figure 1 of Annex 4F.

18.10.4. For vehicles of categories M_2, M_3, N_2 and N_3, the CNG filling unit (receptacle) shall comply with the drawing specifications detailed in Figure 1 or Figure 2 of Annex 4F or with the drawing specifications detailed in Figure 1 of Annex 4F for CNG only.

18.11. Fuel selection system and electrical installation

18.11.1. The electrical components of the CNG/LNG system shall be protected against overloads.

18.11.2. Vehicles with more than one fuel system shall have a fuel selection system to ensure that no more than one fuel at the same time is supplied to the engine for a limited duration. "Dual-fuel" vehicles, using diesel as the primary fuel for igniting the air/gas mixture, are allowed in cases where these engines and vehicles meet mandatory emission standards.

18.11.3. The electrical connections and components in the gas-tight housing shall be constructed such that no sparks are generated.

18.12. The LNG system shall be designed to prevent any LNG trapping.

18.13. The LNG system in category M vehicles shall be equipped with a natural gas detector and/or gas tight housing. The LNG system in category N vehicles may be equipped with a natural gas detector if the fuel storage tank and associated piping is mounted on the exterior of the vehicle without the possibility of gas trapping (as in paragraph 18.12.). If the fuel storage tank is located inside the cargo area of a category N vehicle then a natural gas detector and/or gas tight housing is mandatory.

19. Conformity of production

19.1. The conformity of production procedures shall comply with those set out in the Agreement, Appendix 2 (E/ECE/324-E/ECE/TRANS/505/Rev.2).

20. Penalties for non-conformity of production

20.1. The approval granted in respect of a type of vehicle pursuant to this Regulation may be withdrawn if the requirements referred to in paragraph 18. above are not complied with.

20.2. If a Party to the Agreement applying this Regulation withdraws an approval it has previously granted, it shall forthwith so notify the other Contracting Parties applying this Regulation, by means of a communication form conforming to the model in Annex 2D to this Regulation.

21. Modification and extension of approval of a vehicle type

21.1. Every modification of the installation of the specific components for the use of compressed natural gas and/or liquefied natural gas in the propulsion system of the vehicle shall be notified to the Type Approval Authority that approved the vehicle type. The Type Approval Authority may then either:

21.1.1. Consider that the modifications made are unlikely to have an appreciably adverse effect and that in any case the vehicle still complies with the requirements; or

21.1.2. Require a further test report from the Technical Service responsible for conducting the tests.

21.2. Confirmation or refusal of approval, specifying the alteration, shall be communicated to the Parties to the Agreement applying this Regulation by means of a form conforming to the model in Annex 2D to this Regulation.

21.3. The Type Approval Authority issuing the extension of approval shall assign a series number for such an extension and inform thereof the other Parties to the 1958 Agreement applying this Regulation by means of a communication form conforming to the model in Annex 2D to this Regulation.

22. Production definitively discontinued

If the holder of the approval completely ceases to manufacture a type of vehicle approved in accordance with this Regulation, he shall so inform the Type Approval Authority that granted the approval. Upon receiving the relevant communication, that Authority shall inform thereof the other Parties to the Agreement applying this Regulation by means of a communication form conforming to the model in Annex 2D to this Regulation.

23. Names and addresses of Technical Services responsible for conducting approval tests, and of Type Approval Authorities

The Parties to the Agreement applying this Regulation shall communicate to the United Nations Secretariat the names and addresses of the Technical Services responsible for conducting approval tests and of the Type Approval Authorities which grant approval and to which forms certifying approval or extension or refusal or withdrawal of approval, issued in other countries, are to be sent.

24. Transitional provisions

24.1. As from the official date of entry into force of the 01 series of amendments to this Regulation, no Contracting Party applying this Regulation shall refuse to grant or refuse to accept type approval under this Regulation as amended by the 01 series of amendments.

24.2. As from 12 months after the date of entry into force of the 01 series of amendments to this Regulation, Contracting Parties applying this Regulation shall grant approvals only if the type of components to be approved meets the requirements of Part I of this Regulation as amended by the 01 series of amendments to this Regulation.

24.3. Type approvals of components other than fuel rail, as defined in paragraph 4.74., granted according to the original version of this Regulation, shall remain valid and shall be accepted for the purpose of their installation on vehicles.

24.4. As from 18 months after the date of entry into force of the 01 series of amendments to this Regulation, Contracting Parties applying this Regulation shall grant approvals only if the vehicle type to be approved meets the requirements of Part II of this Regulation as amended by the 01 series of amendments to this Regulation.

24.5. Until 12 months after the date of entry into force of the 01 series of amendments to this Regulation, Contracting Parties applying this Regulation can continue to grant type approvals for the type of components to the original version of this Regulation without taking into account the provisions of the 01 series of amendments.

24.6. Until 18 months after the date of entry into force of the 01 series of amendments to this Regulation, Contracting Parties applying this Regulation can continue to grant type approvals for the vehicle type to the original version of this Regulation without taking into account the provisions of the 01 series of amendments.

24.7. Notwithstanding the provisions of paragraphs 24.5. and 24.6., Contracting Parties applying this Regulation shall not refuse to grant extensions of type approvals for existing types of component or vehicle types which have been issued according to this Regulation without taking into account the provisions of the 01 series of amendments to this Regulation.

Annex 1A

Essential characteristics of the CNG/LNG components

1. (Not allocated)

1.2.4.5.1. System description:

1.2.4.5.2. CNG Pressure regulator(s): yes/no[1]

1.2.4.5.2.1. Make(s):.....

1.2.4.5.2.2. Type(s):.....

1.2.4.5.2.5. Drawings:.....

1.2.4.5.2.6. Number of main adjustment points.....

1.2.4.5.2.7. Description of principle of adjustment through main adjustment points: .....

1.2.4.5.2.8. Number of idle adjustment points:.....

1.2.4.5.2.9. Description of principles of adjustment through idle adjustment points: .....

1.2.4.5.2.10. Other adjustment possibilities: if so and which (description and drawings):

1.2.4.5.2.11. Working pressure(s):[2] .....kPa

1.2.4.5.2.12. Material:.....

1.2.4.5.2.13. Operating temperatures:[2] ..... °C

1.2.4.5.3. CNG Gas/air mixer: yes/no[1]

1.2.4.5.3.1. Number: .....

1.2.4.5.3.2. Make(s):.....

1.2.4.5.3.3. Type(s):.....

1.2.4.5.3.4. Drawings:.....

1.2.4.5.3.5. Adjustment possibilities: .....

1.2.4.5.3.6. Working pressure(s):[2] .....kPa

1.2.4.5.3.7. Material:.....

1.2.4.5.3.8. Operating temperatures:[2] ..... °C

1.2.4.5.4. CNG Gas flow adjuster: yes/no[1]

1.2.4.5.4.1. Number: .....

1.2.4.5.4.2. Make(s):.....

1.2.4.5.4.3. Type(s):.....

1.2.4.5.4.4. Drawings:.....

[1] Strike out what does not apply.
[2] Specify the tolerance.

1.2.4.5.4.5. Adjustment possibilities (description) .....
.....
1.2.4.5.4.6 Working pressure(s):[2] .....kPa
1.2.4.5.4.7. Material:.....
1.2.4.5.4.8. Operating temperatures:[2] ..... °C
1.2.4.5.5. CNG Gas injector(s): yes/no[1]
1.2.4.5.5.1. Make(s):.....
1.2.4.5.5.2. Type(s):.....
1.2.4.5.5.3. Identification:.....
1.2.4.5.5.4. Working pressure(s):[2] .....kPa
1.2.4.5.5.5. Drawings of installation:.....
1.2.4.5.5.6. Material:.....
1.2.4.5.5.7. Operating temperatures:[2] ..... °C
1.2.4.5.6. Electronic Control Unit (CNG and/or LNG): yes/no[1]
1.2.4.5.6.1. Make(s):.....
1.2.4.5.6.2. Type(s):.....
1.2.4.5.6.3. Adjustment possibilities: .....
1.2.4.5.6.4. Basic software principles:.....
1.2.4.5.6.5. Operating temperatures:[2] ..... °C
1.2.4.5.7. CNG container(s) or cylinder(s): yes/no[1]
LNG tank(s) or vessel(s): yes/no[1]
1.2.4.5.7.1. Make(s):.....
1.2.4.5.7.2. Type(s) (include drawings):.....
1.2.4.5.7.3. Capacity:.....litres
1.2.4.5.7.4. Drawings of the installation of the container/tank: .....
1.2.4.5.7.5. Dimensions: .....
1.2.4.5.7.6. Material:.....
1.2.4.5.8. CNG container/LNG tank accessories
1.2.4.5.8.1. Pressure indicator: yes/no[1]
1.2.4.5.8.1.1. Make(s):.....
1.2.4.5.8.1.2. Type(s):.....
1.2.4.5.8.1.3. Operating principle: float/other[1] (include description or drawings) .....
1.2.4.5.8.1.4. Working pressure(s):[2] ..... MPa
1.2.4.5.8.1.5. Material:.....
1.2.4.5.3.1.6. Operating temperatures:[2] ..... °C
1.2.4.5.8.2. Pressure relief valve (discharge valve): yes/no[1]

1.2.4.5.8.2.1. Make(s):.....

1.2.4.5.8.2.2. Type(s):.....

1.2.4.5.8.2.3. Working pressure(s):[2] ..... MPa

1.2.4.5.8.2.4. Material:.....

1.2.4.5.8.2.5. Operating temperatures:[2] ..... °C

1.2.4.5.8.3. Automatic cylinder valve

1.2.4.5.8.3.1. Make(s):.....

1.2.4.5.8.3.2. Type(s):.....

1.2.4.5.8.3.3. Working pressure(s):[2] ..... MPa

1.2.4.5.8.3.4. Material:.....

1.2.4.5.8.3.5. Operating temperatures:[2] ..... °C

1.2.4.5.8.4. Excess flow valve: yes/no[1]

1.2.4.5.8.4.1. Make(s):.....

1.2.4.5.8.4.2. Type(s):.....

1.2.4.5.8.4.3. Working pressure(s):[2] ..... MPa

1.2.4.5.8.4.4. Material:.....

1.2.4.5.8.4.5. Operating temperatures:[2] ..... °C

1.2.4.5.8.5. Gas-tight housing: yes/no[1]

1.2.4.5.8.5.1. Make(s):.....

1.2.4.5.8.5.2. Type(s):.....

1.2.4.5.8.5.3. Working pressure(s):[2] ..... MPa

1.2.4.5.8.5.4. Material:.....

1.2.4.5.8.5.5. Operating temperatures:[2] ..... °C

1.2.4.5.8.6. Manual valve: yes/no[1]

1.2.4.5.8.6.1. Make(s):.....

1.2.4.5.8.6.2. Type(s):.....

1.2.4.5.8.6.3. Drawings:.....

1.2.4.5.8.6.4. Working pressure(s):[2] ..... MPa

1.2.4.5.8.6.5. Material:.....

1.2.4.5.8.6.6. Operating temperatures:[2] ..... °C

1.2.4.5.9. Pressure relief device (temperature triggered): yes/no[1]

1.2.4.5.9.1. Make(s):.....

1.2.4.5.9.2. Type(s):.....

1.2.4.5.9.3. Description and drawings: .....

1.2.4.5.9.4. Activation temperature:[2] ..... °C

1.2.4.5.9.5. Material:.....

1.2.4.5.9.6. Operating temperatures:[2] ..... °C

1.2.4.5.10. Filling unit or receptacle: yes/no[1]

1.2.4.5.10.1. Make(s):.....

1.2.4.5.10.2. Type(s):.....

1.2.4.5.10.3. Working pressure(s):[2] ..... MPa

1.2.4.5.10.4. Description and drawings: .....

1.2.4.5.10.5. Material:.....

1.2.4.5.10.6. Operating temperatures:[2] ..... °C

1.2.4.5.11. Flexible fuel lines: yes/no[1]

1.2.4.5.11.1. Make(s):.....

1.2.4.5.11.2. Type(s):.....

1.2.4.5.11.3. Description: .....

1.2.4.5.11.4. Working pressure(s):[2] .....kPa

1.2.4.5.11.5. Material:.....

1.2.4.5.11.6. Operating temperatures:[2] ..... °C

1.2.4.5.12. Pressure and Temperature sensor(s): yes/no[1]

1.2.4.5.12.1. Make(s):.....

1.2.4.5.12.2. Type(s):.....

1.2.4.5.12.3. Description: .....

1.2.4.5.12.4. Working pressure(s):[2] .....kPa

1.2.4.5.12.5. Material:.....

1.2.4.5.12.6. Operating temperatures:[2] ..... °C

1.2.4.5.13. CNG filter(s): yes/no[1]

1.2.4.5.13.1. Make(s):.....

1.2.4.5.13.2. Type(s):.....

1.2.4.5.13.3. Description: .....

1.2.4.5.13.4. Working pressure(s):[2] .....kPa

1.2.4.5.13.5. Material:.....

1.2.4.5.13.6. Operating temperatures:[2] ..... °C

1.2.4.5.14. Non-return valve(s) or check valve(s): yes/no[1]

1.2.4.5.14.1. Make(s):.....

1.2.4.5.14.2. Type(s):.....

1.2.4.5.14.3. Description: .....

1.2.4.5.14.4. Working pressure(s):[2] .....kPa

1.2.4.5.14.5. Material:.....

1.2.4.5.14.6. Operating temperatures:[2] ..... °C

1.2.4.5.15. Connection to CNG/LNG system for heating system: yes/no[1]

1.2.4.5.15.1. Make(s):.....

1.2.4.5.15.2. Type(s):.....

1.2.4.5.15.3. Description and drawings of installation: .....

1.2.4.5.16. PRD (pressure triggered): yes/no[1]

1.2.4.5.16.1. Make(s): .....

1.2.4.5.16.2. Type(s): .....

1.2.4.5.16.3. Description and drawings: .....

1.2.4.5.16.4. Activation pressure:[2] ..... MPa

1.2.4.5.16.5. Material:.....

1.2.4.5.16.6. Operating temperatures:[2] ..... °C

1.2.4.5.17. Fuel rail: yes/no[1]

1.2.4.5.17.1. Make(s): .....

1.2.4.5.17.2. Type(s): .....

1.2.4.5.17.3. Description: .....

1.2.4.5.17.4. Working pressure:[2] .....kPa

1.2.4.5.17.5. Material:.....

1.2.4.5.17.6. Operating temperatures:[2] ..... °C

1.2.4.5.18. Heat Exchanger /Vaporizer: yes/no[1] .....

1.2.4.5.18.1. Make(s):.....

1.2.4.5.18.2 Drawings:.....

1.2.4.5.18.3. Working pressure(s):[2] ..... MPa

1.2.4.5.18.4. Material:.....

1.2.4.5.18.5. Operating temperatures:[2] .....°C

1.2.4.5.19. Natural gas detector: yes/no[1]

1.2.4.5.19.1. Make(s):.....

1.2.4.5.19.2. Type(s):.....

1.2.4.5.19.3. Drawings:.....

1.2.4.5.19.4. Working pressure(s):[2] ..... MPa

1.2.4.5.19.5. Material:.....

1.2.4.5.19.6. Operating temperatures:[2] .....°C

1.2.4.5.19.7. Set Values .....

1.2.4.5.20. LNG filling receptacle(s): yes/no[1]

1.2.4.5.20.1. Make(s):.....

1.2.4.5.20.2. Type(s):.....

1.2.4.5.20.3. Description: .....

1.2.4.5.20.4. Working pressure(s):[2] .....kPa

1.2.4.5.20.5. Material:.....

1.2.4.5.21. LNG pressure control regulator(s): yes/no[1]

1.2.4.5.21.1. Make(s):.....

1.2.4.5.21.2. Type(s):.....

1.2.4.5.21.3. Description: .....

1.2.4.5.21.4. Working pressure(s):[2] .....kPa

1.2.4.5.21.5. Material:.....

1.2.4.5.22. LNG Pressure and/or temperature sensor(s): yes/no[1]

1.2.4.5.22.1. Make(s):.....

1.2.4.5.22.2. Type(s):.....

1.2.4.5.22.3. Description: .....

1.2.4.5.22.4. Working pressure(s):[2] .....kPa

1.2.4.5.22.5. Material:.....

1.2.4.5.23. LNG manual valve(s): yes/no[1]

1.2.4.5.23.1. Make(s):.....

1.2.4.5.23.2. Type(s):.....

1.2.4.5.23.3. Description: .....

1.2.4.5.23.4. Working pressure(s):[2] .....kPa

1.2.4.5.23.5. Material:.....

1.2.4.5.24. LNG Automatic valve(s): yes/no[1]

1.2.4.5.24.1. Make(s):.....

1.2.4.5.24.2. Type(s):.....

1.2.4.5.24.3. Description: .....

1.2.4.5.24.4. Working pressure(s):[2] .....kPa

1.2.4.5.24.5. Material:.....

1.2.4.5.25. LNG non-return valve(s): yes/no[1]

1.2.4.5.25.1. Make(s):.....

1.2.4.5.25.2. Type(s):.....

1.2.4.5.25.3. Description: .....

1.2.4.5.25.4. Working pressure(s):[2] .....kPa

1.2.4.5.25.5. Material:.....

1.2.4.5.26. LNG pressure relief valve(s): yes/no[1]

1.2.4.5.26.1. Make(s):.....

1.2.4.5.26.2. Type(s):.....

1.2.4.5.26.3. Description: .....

1.2.4.5.26.4. Working pressure(s):[2] .....kPa

1.2.4.5.26.5. Material:.....

1.2.4.5.27. LNG excess flow valve(s): yes/no[1]

1.2.4.5.27.1. Make(s):.....

1.2.4.5.27.2. Type(s):.....

1.2.4.5.27.3. Description: .....

1.2.4.5.27.4. Working pressure(s):[2] .....kPa

1.2.4.5.27.5. Material:.....

1.2.4.5.28. LNG fuel pump(s): yes/no[1]

1.2.4.5.28.1. Make(s):.....

1.2.4.5.28.2. Type(s):.....

1.2.4.5.28.3. Description: .....

1.2.4.5.28.4. Working pressure(s):[2] .....kPa

1.2.4.5.28.5. Location inside/outside LNG tank[1]:.....

1.2.4.5.28.6. Operating temperatures:[2] .....°C

1.2.5. Cooling system: (liquid/air)[1]

1.2.5.1 System description/drawings with regard to the CNG/LNG system: .....

Annex 1B

Essential characteristics of the vehicle, engine and CNG/LNG-related system

0.	Description of the vehicle(s)
0.1.	Make: .....
0.2.	Type(s): .....
0.3.	Name and address of the manufacturer: .....
0.4.	Engine type(s) and approval No. (Nos.): .....
1.	Description of the engine(s)
1.1.	Manufacturer: .....
1.1.1.	Manufacturer's engine code(s) (as marked on the engine or other means of identification): .....
1.2.	Internal combustion engine
1.2.3.	(Not allocated)
1.2.4.5.1.	(Not allocated)
1.2.4.5.2.	Pressure regulator(s):
1.2.4.5.2.1.	Make(s): .....
1.2.4.5.2.2.	Type(s): .....
1.2.4.5.2.3.	Working pressure(s):[1] ..... kPa
1.2.4.5.2.4.	Material: .....
1.2.4.5.2.5.	Operating temperatures:[1] ..... °C
1.2.4.5.3.	Gas/air mixer: yes/no[2]
1.2.4.5.3.1.	Number: .....
1.2.4.5.3.2.	Make(s): .....
1.2.4.5.3.3.	Type(s): .....
1.2.4.5.3.4.	Working pressure(s):[1] ..... kPa
1.2.4.5.3.5.	Material: .....
1.2.4.5.3.6.	Operating temperatures:[1] ..... °C
1.2.4.5.4.	Gas flow adjuster: yes/no[2]
1.2.4.5.4.1.	Number: .....
1.2.4.5.4.2.	Make(s): .....

[1] Specify the tolerance.
[2] Strike out what does not apply.

1.2.4.5.4.3. Type(s):.....

1.2.4.5.4.4. Working pressure(s):[1] .....kPa

1.2.4.5.4.5. Material:.....

1.2.4.5.4.6. Operating temperatures:[1] ..... °C

1.2.4.5.5. Gas injector(s): yes/no[2]

1.2.4.5.5.1. Make(s):.....

1.2.4.5.5.2. Type(s):.....

1.2.4.5.5.3. Working pressure(s):[1] .....kPa

1.2.4.5.5.4. Material:.....

1.2.4.5.5.5. Operating temperatures:[1] ..... °C

1.2.4.5.6. Electronic Control Unit: yes/no[2]

1.2.4.5.6.1. Make(s):.....

1.2.4.5.6.2. Type(s):.....

1.2.4.5.6.3. Basic software principles:.....

1.2.4.5.6.4. Operating temperatures:[1] ..... °C

1.2.4.5.7. CNG container(s) or cylinder(s): yes/no[2]

LNG tank(s) or vessel(s): yes/no[2]

1.2.4.5.7.1. Make(s):.....

1.2.4.5.7.2. Type(s):.....

1.2.4.5.7.3. Capacity:.....litres

1.2.4.5.7.4. Approval number:.....

1.2.4.5.7.5. Dimensions:.....

1.2.4.5.7.6. Material:.....

1.2.4.5.8. CNG container accessories/LNG tank accessories:

1.2.4.5.8.1. Pressure indicator:

1.2.4.5.8.1.1. Make(s):.....

1.2.4.5.8.1.2. Type(s):.....

1.2.4.5.8.1.3. Working pressure(s):[1] ..... MPa

1.2.4.5.8.1.4. Material:.....

1.2.4.5.8.1.5. Operating temperatures:[1] ..... °C

1.2.4.5.8.2. Pressure relief valve (discharge valve): yes/no[2]

1.2.4.5.8.2.1. Make(s):.....

1.2.4.5.8.2.2. Type(s):.....

1.2.4.5.8.2.3. Working pressure:[1] ..... MPa

1.2.4.5.8.2.4. Material:.....

1.2.4.5.8.2.5. Operating temperatures:[1] ..... °C

1.2.4.5.8.3. Automatic valve(s):

1.2.4.5.8.3.1. Make(s):.....

1.2.4.5.8.3.2. Type(s):.....

1.2.4.5.8.3.3. Working pressure(s):[1] ..... MPa

1.2.4.5.8.3.4. Material:.....

1.2.4.5.8.3.5. Operating temperatures:[1] ..... °C

1.2.4.5.8.4. Excess flow valve: yes/no[2]

1.2.4.5.8.4.1. Make(s):.....

1.2.4.5.8.4.2. Type(s):.....

1.2.4.5.8.4.3. Working pressure(s):[1] ..... MPa

1.2.4.5.8.4.4. Material:.....

1.2.4.5.8.4.5. Operating temperatures:[1] ..... °C

1.2.4.5.8.5. Gas-tight housing: yes/no[2]

1.2.4.5.8.5.1. Make(s):.....

1.2.4.5.8.5.2. Type(s):.....

1.2.4.5.8.5.3. Working pressure(s):[1] ..... MPa

1.2.4.5.8.5.4. Material:.....

1.2.4.5.8.5.5. Operating temperatures:[1] ..... °C

1.2.4.5.8.6. Manual valve:

1.2.4.5.8.6.1. Make(s):.....

1.2.4.5.8.6.2. Type(s):.....

1.2.4.5.8.6.3. Working pressure(s):[1] ..... MPa

1.2.4.5.8.6.4. Material:.....

1.2.4.5.8.6.5. Operating temperatures:[1] ..... °C

1.2.4.5.9. Pressure relief device (temperature triggered): yes/no[2]

1.2.4.5.9.1. Make(s):.....

1.2.4.5.9.2. Type(s):.....

1.2.4.5.9.3. Activation temperature:[1] ..... °C

1.2.4.5.9.4. Material:.....

1.2.4.5.9.5. Operating temperatures:[1] ..... °C

1.2.4.5.10. Filling unit or receptacle: yes/no[2]

1.2.4.5.10.1. Make(s):.....

1.2.4.5.10.2. Type(s):.....

1.2.4.5.10.3. Working pressure(s):[1] ..... MPa

1.2.4.5.10.4. Material:.....

1.2.4.5.10.5. Operating temperatures:[1] ..... °C

1.2.4.5.11. Flexible fuel lines: yes/no[2]

1.2.4.5.11.1. Make(s):.....

1.2.4.5.11.2. Type(s):.....

1.2.4.5.11.3. Working pressure(s):[1] .....kPa

1.2.4.5.11.4. Material:.....

1.2.4.5.11.5. Operating temperatures:[1] ..... °C

1.2.4.5.12. Pressure and temperature sensor(s): yes/no[2]

1.2.4.5.12.1. Make(s):.....

1.2.4.5.12.2. Type(s):.....

1.2.4.5.12.3. Working pressure(s):[1] .....kPa

1.2.4.5.12.4. Material:.....

1.2.4.5.12.5. Operating temperatures:[1] ..... °C

1.2.4.5.13. CNG filter: yes/no[2]

1.2.4.5.13.1. Make(s):.....

1.2.4.5.13.2. Type(s):.....

1.2.4.5.13.3. Working pressure(s):[1] .....kPa

1.2.4.5.13.4. Material:.....

1.2.4.5.13.5. Operating temperatures:[1] ..... °C

1.2.4.5.14. Non-return valve(s) or check valve(s): yes/no[2]

1.2.4.5.14.1. Make(s):.....

1.2.4.5.14.2. Type(s):.....

1.2.4.5.14.3. Working pressure(s):[1] .....kPa

1.2.4.5.14.4. Material:.....

1.2.4.5.14.5. Operating temperatures:[1] ..... °C

1.2.4.5.15. Connection to CNG/LNG system for heating system: yes/no[2]

1.2.4.5.15.1. Make(s):.....

1.2.4.5.15.2. Type(s):.....

1.2.4.5.15.3. Description and drawings of installation: .....

1.2.4.5.16. PRD (pressure triggered): yes/no[2]

1.2.4.5.16.1. Make(s):.....

1.2.4.5.16.2. Type(s):.....

1.2.4.5.16.3. Activation pressure:[1]..... MPa

1.2.4.5.16.4. Material:.....

1.2.4.5.16.5. Operating temperatures:[1] ..... °C

1.2.4.5.17. Fuel rail: yes/no[2]

1.2.4.5.17.1. Make(s):.....

1.2.4.5.17.2. Type(s):.....

1.2.4.5.17.3. Working pressure:[1] .....kPa

1.2.4.5.17.4. Material:.....

1.2.4.5.17.5. Operating temperatures:[1] ..... °C

1.2.4.5.18. Heat exchanger/Vaporizer Heat Exchanger /Vaporizer: yes/no[2] .....

1.2.4.5.18.1. Make(s):.....

1.2.4.5.18.2. Type(s):.....

1.2.4.5.18.3. Drawings:.....

1.2.4.5.18.4. Working pressure(s):[1] ..... MPa

1.2.4.5.18.5. Material:.....

1.2.4.5.18.6. Operating temperatures:[1] .....°C

1.2.4.5.19. Natural gas detector: yes/no[2]

1.2.4.5.19.1. Make(s):.....

1.2.4.5.19.2. Type(s):.....

1.2.4.5.19.3. Drawings:.....

1.2.4.5.19.4. Working pressure(s):[1] ..... MPa

1.2.4.5.19.5. Material:.....

1.2.4.5.19.6. Operating temperatures:[1] .....°C

1.2.4.5.19.7. Set Values .....

1.2.4.5.20. LNG filling receptacle(s): yes/no[2]

1.2.4.5.20.1. Make(s):.....

1.2.4.5.20.2. Type(s):.....

1.2.4.5.20.3. Description: .....

1.2.4.5.20.4. Working pressure(s):[1] .....kPa

1.2.4.5.20.5. Material:.....

1.2.4.5.21. LNG pressure control regulator(s): yes/no[2]

1.2.4.5.21.1. Make(s):.....

1.2.4.5.21.2. Type(s):.....

1.2.4.5.21.3. Description: .....

1.2.4.5.21.4. Working pressure(s):[1] .....kPa

1.2.4.5.21.5. Material:.....

1.2.4.5.22. LNG Pressure and/or temperature sensor(s): yes/no[2]

1.2.4.5.22.1. Make(s):.....

1.2.4.5.22.2. Type(s):.....

1.2.4.5.22.3. Description: .....

1.2.4.5.22.4. Working pressure(s):[1] .....kPa

1.2.4.5.22.5. Material:.....

1.2.4.5.23. LNG manual valve(s): yes/no[2]

1.2.4.5.23.1. Make(s):.....

1.2.4.5.23.2. Type(s):.....

1.2.4.5.23.3. Description: .....

1.2.4.5.23.4. Working pressure(s):[1] .....kPa

1.2.4.5.23.5. Material:.....

1.2.4.5.24. LNG Automatic valve(s): yes/no[2]

1.2.4.5.24.1. Make(s):.....

1.2.4.5.24.2. Type(s):.....

1.2.4.5.24.3. Description: .....

1.2.4.5.24.4. Working pressure(s):[1] .....kPa

1.2.4.5.24.5. Material:.....

1.2.4.5.25. LNG non-return valve(s): yes/no[2]

1.2.4.5.25.1. Make(s):.....

1.2.4.5.25.2. Type(s):.....

1.2.4.5.25.3. Description: .....

1.2.4.5.25.4. Working pressure(s):[1] .....kPa

1.2.4.5.25.5. Material:.....

1.2.4.5.26. LNG pressure relief valve(s): yes/no[2]

1.2.4.5.26.1. Make(s):.....

1.2.4.5.26.2. Type(s):.....

1.2.4.5.26.3. Description: .....

1.2.4.5.26.4. Working pressure(s):[1] .....kPa

1.2.4.5.26.5. Material:.....

1.2.4.5.27. LNG excess flow valve(s): yes/no[2]

1.2.4.5.27.1. Make(s):.....

1.2.4.5.27.2. Type(s):.....

1.2.4.5.27.3. Description: .....

1.2.4.5.27.4. Working pressure(s):[1] .....kPa

1.2.4.5.27.5. Material:.....

1.2.4.5.28. LNG fuel pump(s): yes/no[2]

1.2.4.5.28.1. Make(s):.....

1.2.4.5.28.2. Type(s):.....

1.2.4.5.28.3. Description: .....

1.2.4.5.28.4. Working pressure(s):[1] .....kPa

1.2.4.5.28.5. Location inside/outside LNG tank[2]

1.2.4.5.28.6. Operating temperatures:[1] .....

1.2.4.5.29. Further documentation:.....

1.2.4.5.29.1. Description of the CNG system / LNG system[2]

1.2.4.5.29.2. System lay-out (electrical connections, vacuum connections compensation hoses, etc.): .....

1.2.4.5.29.3. Drawing of the symbol: .....

1.2.4.5.29.4. Adjustment data:.....

1.2.4.5.29.5. Certificate of the vehicle on petrol, if already granted: .....

1.2.5. Cooling system: (liquid/air)[2]

Annex 2A

Arrangement of the CNG/LNG component type approval mark

(See paragraph 7.2. of this Regulation)

110 R-012439 "L"
(or "M" or "C")

a ≥ 8 mm

The above approval mark affixed to the CNG and or LNG component shows that this component has been approved in Italy (E 3), pursuant to Regulation No. 110 under approval number 012439. The first two digits of the approval number indicate that the approval was granted in accordance with the requirements of Regulation No. 110 as amended by the 01 series of amendments.

The letter "L" indicates that the product is suitable for use with LNG.

The letter "M" indicates that the product is suitable in moderate temperatures.

The letter "C" indicates that the product is suitable in cold temperatures.

Annex 2B

Communication

(Maximum format: A4 (210 x 297 mm))

E 1 ...

issued by: Name of administration:
.....
.....
.....

Concerning:[2] Approval granted
Approval extended
Approval refused
Approval withdrawn
Production definitively discontinued

of a type of CNG/LNG component pursuant to Regulation No. 110

Approval No.: ..... Extension No.: .....

1. CNG/LNG component considered:

Container(s) or cylinder(s)[2]

Tank(s) or vessel(s)[2]

Pressure indicator[2]

Pressure relief valve[2]

Automatic valve(s)[2]

Excess flow valve[2]

Gas-tight housing[2]

Pressure regulator(s)[2]

Non-return valve(s) or check valve(s)[2]

Pressure relief device (PRD) (temperature triggered)[2]

Manual valve[2]

Flexible fuel lines[2]

Filling unit or receptacle[2]

Gas injector(s)[2]

[1] Distinguishing number of the country which has granted/extended/refused/withdrawn approval (see approval provisions in the Regulation).
[2] Strike out what does not apply.

Gas flow adjuster[2]

Gas/air mixer[2]

Electronic control unit[2]

Pressure and temperature sensor(s)[2]

CNG filter(s)[2]

PRD (pressure triggered)[2]

Fuel rail[2]

Heat exchanger(s) / vaporizer(s)[2]

Natural gas detector(s)[2]

LNG filling receptacle(s)[2]

LNG pressure control regulator(s)[2]

LNG pressure and/or temperature sensor(s)[2]

LNG manual valve(s)[2]

LNG automatic valve(s)[2]

LNG non-return valve(s)[2]

LNG pressure relief valve(s)[2]

LNG excess flow valve(s)[2]

LNG fuel pump(s)[2]

2. Trade name or mark:.....

3. Manufacturer's name and address:.....

4. If applicable, name and address of manufacturer's representative:.....

5. Submitted for approval on: .....

6. Technical Service responsible for conducting approval tests: .....

7. Date of report issued by that Service:.....

8. No. of report issued by that Service:.....

9. Approval granted/refused/extended/withdrawn[2]

10. Reason(s) of extension (if applicable): .....

11. Place: .....

12. Date: .....

13. Signature:.....

14. The documents filed with the application or extension of approval can be obtained upon request.

Annex 2B - Addendum

1.	Additional information concerning the type approval of a type of CNG/LNG components pursuant to Regulation No. 110
1.1.	Natural Gas Storage System
1.1.1.	Container(s) or cylinder(s) (for CNG system)
1.1.1.1.	Dimensions: .....
1.1.1.2.	Material:.....
1.1.2.	Tank(s) or vessel(s) (for LNG system)
1.1.2.1.	Capacity: .....
1.1.2.2.	Material:.....
1.2.	Pressure indicator
1.2.1.	Working pressure(s):[1] ..... MPa
1.2.2.	Material:.....
1.3.	Pressure relief valve (discharge valve)
1.3.1.	Working pressure(s):[1] ..... MPa
1.3.2.	Material:.....
1.4.	Automatic valve(s)
1.4.1.	Working pressure(s):[1] ..... MPa
1.4.2.	Material:.....
1.5.	Excess flow valve
1.5.1.	Working pressure(s):[1] ..... MPa
1.5.2.	Material:.....
1.6.	Gas-tight housing
1.6.1.	Working pressure(s): ..... MPa
1.6.2.	Material:.....
1.7.	Pressure regulator(s)
1.7.1.	Working pressure(s):[1] ..... MPa
1.7.2.	Material:.....
1.8.	Non-return valve(s) or check valve(s)
1.8.1.	Working pressure(s):[1] ..... MPa
1.8.2.	Material:.....
1.9.	Pressure relief device (temperature triggered)

[1] Specify the tolerance.

1.9.1. Working pressure(s):[1] ..... MPa

1.9.2. Material:.....

1.10. Manual valve

1.10.1. Working pressure(s):[1] ..... MPa

1.10.2. Material:.....

1.11. Flexible fuel lines

1.11.1. Working pressure(s):[1] ..... MPa

1.11.2. Material:.....

1.12. Filling unit or receptacle

1.12.1. Working pressure(s):[1] ..... MPa

1.12.2. Material:.....

1.13. Gas injector(s)

1.13.1. Working pressure(s):[1] ..... MPa

1.13.2. Material:.....

1.14. Gas flow adjuster

1.14.1. Working pressure(s):[1] ..... MPa

1.14.2. Material:.....

1.15. Gas/air mixer

1.15.1. Working pressure(s):[1] ..... MPa

1.15.2. Material:.....

1.16. Electronic control unit

1.16.1. Basic software principles:.....

1.17. Pressure and temperature sensor(s)

1.17.1. Working pressure(s):[1] ..... MPa

1.17.2. Material:.....

1.18. CNG filter(s)

1.18.1. Working pressure(s):[1] ..... MPa

1.18.2. Material:.....

1.19. PRD (pressure triggered)

1.19.1. Working pressure(s):[1] ..... MPa

1.19.2. Material:.....

1.20. Fuel rail(s)

1.20.1. Working pressure(s):[1]..... MPa

1.20.2. Material:.....

1.21. Heat Exchanger(s) / Vaporizer(s)

1.21.1. Working pressure(s):[1] ..... MPa

1.21.2. Material:.....

1.22. Natural gas detector(s):

1.22.1. Working pressure(s):[1] ..... MPa

1.22.2. Material..... MPa

1.23. LNG filling receptacle(s)

1.23.1. Working pressure(s):[1] ..... MPa

1.23.2. Material:..... MPa

1.24. LNG pressure control regulator(s)

1.24.1. Working pressure(s):[1] ..... MPa

1.24.2. Material:..... MPa

1.25. LNG pressure and/or temperature sensor(s)

1.25.1. Working pressure(s):[1] ..... MPa

1.25.2. Material:..... MPa

1.26. LNG manual valve(s)

1.26.1. Working pressure(s):[1] ..... MPa

1.26.2. Material:..... MPa

1.27. LNG automatic valve(s)

1.27.1. Working pressure(s):[1] ..... MPa

1.27.2. Material:..... MPa

1.28. LNG non-return valve(s)

1.28.1. Working pressure(s):[1] ..... MPa

1.28.2. Material:..... MPa

1.29. LNG pressure relief valve(s)

1.29.1. Working pressure(s):[1] ..... MPa

1.29.2. Material:..... MPa

1.30. LNG excess flow valve(s)

1.30.1. Working pressure(s):[1] ..... MPa

1.30.2. Material:..... MPa

1.31. LNG fuel pump(s)

1.31.1. Working pressure(s):[1] ..... MPa

1.31.2. Material:..... MPa

Annex 2C

Arrangement of approval marks

Model A

(See paragraph 17.2. of this Regulation)

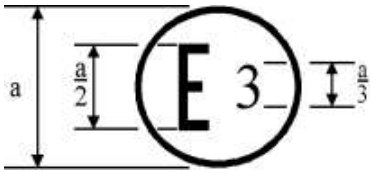

110 R-012439 "L"
(or "M" or "C")

a ≥ 8 mm

The above approval mark affixed to a vehicle shows that the vehicle has, with regard to the installation of CNG/LNG system for the use of natural gas for propulsion, been approved in Italy (E 3), pursuant to Regulation No. 110 under approval number 012439. The first two digits of the approval number indicate that the approval was granted in accordance with the requirements of Regulation No. 110 as amended by the 01 series of amendments.

The letter "L" indicates that the product is suitable for use with LNG.

The letter "M" indicates that the product is suitable in moderate temperatures.

The letter "C" indicates that the product is suitable in cold temperatures.

Model B

(See paragraph 17.2. of this Regulation)

110 012439 "L"
83 051628
(or "M" or "C")

a ≥ 8 mm

The above approval mark affixed to a vehicle shows that the vehicle has, with regard to the installation of CNG/LNG system for the use of natural gas for propulsion, been approved in Italy (E 3), pursuant to Regulation No. 110 under approval number 012439. The first two digits of the approval number indicate that at the date the approval was granted in accordance with the requirements of Regulation No. 110 as amended by the 01 series of amendments and that Regulation No. 83 included the 05 series of amendments.

The letter "L" indicates that the product is suitable for use with LNG.

The letter "M" indicates that the product is suitable in moderate temperatures.

The letter "C" indicates that the product is suitable in cold temperatures.

Annex 2D

Communication

(Maximum format: A4 (210 x 297 mm))

issued by: Name of administration:
.....
.....
.....

Concerning:[2] Approval granted
Approval extended
Approval refused
Approval withdrawn
Production definitively discontinued

of a vehicle type with regard to the installation of CNG/LNG system pursuant to Regulation No. 110

Approval No.: ……..... Extension No.: .....

1. Trade name or mark of vehicle: .....
2. Vehicle type: .....
3. Vehicle category: .....
4. Manufacturer's name and address: .....
5. If applicable, name and address of manufacturer's representative: .....
6. Description of the vehicle, drawings, etc. (needs detailing): .....
7. Test results: .....
8. Vehicle submitted for approval on: .....
9. Technical Service responsible for conducting approval tests: .....
10. Date of report issued by that Service: .....
11. CNG/LNG system

11.1. Trade name or mark of components and their approval numbers: .....

11.1.1. Container(s) or cylinder(s): .....

11.1.2. Tank(s) or vessel(s): .....

[1] Distinguishing number of the country which has granted/extended/refused/withdrawn approval (see approval provisions in the Regulation).

[2] Strike out what does not apply.

11.1.3. Specific components, etc. (see para. 4.6. of the Regulation) .....

12. No. of report issued by that service: .....

13. Approval granted/refused/extended/withdrawn[2].....

14. Reason(s) of extension (if applicable): .....

15. Place: .....

16. Date: .....

17. Signature:.....

18. The following documents filed with the application or extension of approval can be obtained upon request:

Drawings, diagrams and scheme plans on the components and the installation of the CNG/LNG equipment considered to be of importance for the purpose of this Regulation;

Where applicable drawings of the various equipment and their position in the vehicle.

Annex 3

On-board storage of natural gas as a fuel for automotive vehicles

1. Scope

1.1. Annex 3A sets out minimum requirements for light-weight refillable gas cylinders. The cylinders are intended only for the on-board storage of high pressure compressed natural gas as a fuel for automotive vehicles to which the cylinders are to be fixed. Cylinders may be of any steel, aluminium or non-metallic material, design or method of manufacture suitable for the specified service conditions. This annex also covers stainless steel metal liners of seamless or welded construction.

1.2. Annex 3B sets out minimum requirements for refillable fuel tanks for liquefied natural gas (LNG) used in vehicles as well as the testing methods required.

Annex 3A

Gas cylinders - High pressure cylinder for the on-board storage of CNG compressed natural gas as a fuel for automotive vehicles

1. Scope

Cylinders covered by this annex are classified in Class 0, as described in paragraph 3. of this Regulation, and are:

CNG-1 Metal

CNG-2 Metal liner reinforced with resin impregnated continuous filament (hoop wrapped)

CNG-3 Metal liner reinforced with resin impregnated continuous filament (fully wrapped)

CNG-4 Resin impregnated continuous filament with a non-metallic liner (all composite)

Service conditions to which the cylinders will be subjected are detailed in paragraph 4. of this annex. This annex is based upon a working pressure for natural gas as a fuel of 20 MPa settled at 15 °C with a maximum filling pressure of 26 MPa. Other working pressures can be accommodated by adjusting the pressure by the appropriate factor (ratio). For example, a 25 MPa working pressure system will require pressures to be multiplied by 1.25.

The service life of the cylinder shall be defined by the manufacturer and may vary with applications. Definition of service life is based upon filling the cylinders 1,000 times a year for a minimum of 15,000 fills. The maximum service life shall be 20 years.

For metal and metal-lined cylinders, the cylinder life is based upon the rate of fatigue crack growth. The ultrasonic inspection, or equivalent, of each cylinder or liner is required to ensure the absence of flaws which exceed the maximum allowable size. This approach permits the optimized design and manufacture of light weight cylinders for natural gas vehicle service.

For all-composite cylinders with non-metallic non-load bearing liners the "safe life" is demonstrated by appropriate design methods, design qualification testing and manufacturing controls.

2. References (see paragraph 2. of this Regulation)

3. Definitions (see paragraph 4. of this Regulation)

4. Service conditions

4.1. General

4.1.1. Standard service conditions

The standard service conditions specified in this section are provided as a basis for the design, manufacture, inspection, testing, and approval of cylinders that are to be mounted permanently on vehicles and used to store natural gas at ambient temperatures for use as a fuel on vehicles.

4.1.2. Use of cylinders

The service conditions specified are also intended to provide information on how cylinders made to this Regulation may safely be used to:

(a) Manufacturers of cylinders;

(b) Owners of cylinders;

(c) Designers or contractors responsible for the installation of cylinders;

(d) Designers or owners of equipment used to refuel vehicle cylinders;

(e) Suppliers of natural gas; and

(f) Regulatory authorities who have jurisdiction over cylinder use.

4.1.3. Service life

The service life for which cylinders are safe shall be specified by the cylinder designer on the basis of use under service conditions specified herein. The maximum service life shall be 20 years.

4.1.4. Periodic requalification

Recommendations for periodic requalification by visual inspection or testing during the service life shall be provided by the cylinder manufacturer on the basis of use under service conditions specified herein. Each cylinder shall be visually inspected at least every 48 months after the date of its entry into service on the vehicle (vehicle registration), and at the time of any reinstallation, for external damage and deterioration, including under the support straps. The visual inspection shall be performed by a competent agency approved or recognized by the Regulatory Authority, in accordance with the manufacturer's specifications: Cylinders without label containing mandatory information or with labels containing mandatory information that are illegible in any way shall be removed from service. If the cylinder can be positively identified by manufacturer and serial number, a replacement label may be applied, allowing the cylinder to remain in service.

4.1.4.1. Cylinders involved in collisions

Cylinders which have been involved in a vehicle collision shall be reinspected by an agency authorized by the manufacturer, unless otherwise directed by the Authority having jurisdiction. A cylinder that has not experienced any impact damage from the collision may be returned to service, otherwise the cylinder shall be returned to the manufacturer for evaluation.

4.1.4.2 Cylinders involved in fires

Cylinders which have been subject to the action of fire shall be reinspected by an agency authorized by the manufacturer, or condemned and removed from service.

4.2. Maximum pressures

The cylinder pressure shall be limited to the following:

(a) A pressure that would settle to 20 MPa at a settled temperature of 15 °C;

(b) 26 MPa, immediately after filling, regardless of temperature;

4.3. Maximum number of filling cycles

Cylinders are designed to be filled up to a settled pressure of 20 MPa (200 bar) at a settled gas temperature of 15 °C for up to 1,000 times per year of service.

4.4. Temperature range

4.4.1. Settled gas temperature

Settled temperature of gas in cylinders may vary from a minimum of -40 °C to a maximum of 65 °C;

4.4.2. Cylinder temperatures

The temperature of the cylinder materials may vary from a minimum of -40 °C to a maximum of +82 °C;

Temperatures over +65 °C may be sufficiently local, or of short enough duration, that the temperature of gas in the cylinder never exceeds +65 °C, except under the conditions of paragraph 4.4.3. below;

4.4.3. Transient temperatures

Developed gas temperatures during filling and discharge may vary beyond the limits of paragraph 4.4.1. above;

4.5. Gas composition

Methanol and/or glycol shall not be deliberately added to the natural gas. Cylinder should be designed to tolerate being filled with natural gas meeting either of the following three conditions:

(a) SAE J1616

(b) Dry gas

Water vapour would normally be limited to less than 32 mg/m^3 at a pressure dew point of -9 °C at 20 MPa. There would be no constituent limits for dry gas, except for:

Hydrogen sulphide and other soluble sulphides:	23 mg/m^3
Oxygen:	1 per cent by volume

Hydrogen shall be limited to 2 per cent by volume when cylinders are manufactured from steel with an ultimate tensile strength exceeding 950 MPa;

(c) Wet gas

Gas that contains water content higher than b) normally meets the following constituent limits;

Hydrogen sulphide and other soluble sulphides:	23 mg/m^3
Oxygen:	1 per cent by volume
Carbon dioxide:	4 per cent by volume
Hydrogen:	0.1 per cent by volume

Under wet gas conditions, a minimum of 1 mg of compressor oil per kg of gas is necessary to protect metallic cylinders and liners.

4.6. External surfaces

Cylinders are not designed for continuous exposure to mechanical or chemical attack, e.g. leakage from cargo that may be carried on vehicles or severe abrasion damage from road conditions, and shall comply with recognized installation standards. However, cylinder external surfaces may be inadvertently exposed to:

(a) Water, either by intermittent immersion or road spray;

(b) Salt, due to the operation of the vehicle near the ocean or where ice melting salt is used;

(c) Ultra-violet radiation from sunlight;

(d) Impact of gravel;

(e) Solvents, acids and alkalis, fertilizers; and

(f) Automotive fluids, including gasoline, hydraulic fluids, glycol and oils.

4.7. Gas permeation or leakage

Cylinders may be located in enclosed spaces for extended periods of time. Permeation of gas through the cylinder wall or leakage between the end connections and the liner shall be considered in the design.

5. Design approval

5.1. General

The following information shall be submitted by the cylinder designer with a request for approval to the Type Approval Authority:

(a) Statement of service (paragraph 5.2.);

(b) Design data (paragraph 5.3.);

(c) Manufacturing data (paragraph 5.4.);

(d) Quality system (paragraph 5.5.);

(e) Fracture performance and NDE (Non Destructive Examination) defect size (paragraph 5.6.);

(f) Specification sheet (paragraph 5.7.);

(g) Additional supporting data (paragraph 5.8.).

For cylinders designed in accordance with ISO 9809, it is not required to provide the stress analysis report in paragraph 5.3.2. or the information in paragraph 5.6.

5.2. Statement of service

The purpose of this statement of service is to guide users and installers of cylinders as well as to inform the approving Type Approval Authority, or their designated representative. The statement of service shall include:

(a) A statement that the cylinder design is suitable for use in the service conditions defined in paragraph 4. for the service life of the cylinder;

(b) The service life;

(c) The minimum in-service test and/or inspection requirements;

(d) The pressure relief devices and/or insulation required;

(e) Support methods, protective coatings, etc., required but not provided;

(f) A description of the cylinder design;

(g) Any other information necessary to ensure the safe use and inspection of the cylinder.

5.3. Design data

5.3.1. Drawings

Drawings shall show the following as a minimum:

(a) Title, reference number, date of issue, and revision numbers with dates of issue if applicable;

(b) Reference to this Regulation and the cylinder type;

(c) All dimensions complete with tolerances, including details of end closure shapes with minimum thicknesses and of openings;

(d) Mass, complete with tolerance, of cylinders;

(e) Material specifications, complete with minimum mechanical and chemical properties or tolerance ranges and, for metal cylinders or metal liners, the specified hardness range;

(f) Other data such as, auto-frettage pressure range, minimum test pressure, details of the fire protection system and of the exterior protective coating.

5.3.2. Stress analysis report

A finite element stress analysis or other stress analysis shall be provided;

A table summarizing the calculated stresses in the report shall be provided.

5.3.3. Material test data

A detailed description of the materials and tolerances of the materials properties used in the design shall be provided. Test data shall also be presented characterizing the mechanical properties and the suitability of the materials for service under the conditions specified in paragraph 4. above.

5.3.4. Design qualification test data

The cylinder material, design, manufacture and examination shall be provided to be adequate for their intended service by meeting the requirements of the tests required for the particular cylinder design, when tested in accordance with the relevant methods of test detailed in Appendix A to this annex.

The test data shall also document the dimensions, wall thicknesses and weights of each of the test cylinders.

5.3.5. Fire protection

The arrangement of pressure relief devices that will protect the cylinder from sudden rupture when exposed to the fire conditions in paragraph A.15 of Appendix A to this annex shall be specified. Test data shall substantiate the effectiveness of the specified fire protection system.

5.3.6. Cylinder supports

Details of cylinder supports or support requirements shall be provided in accordance with paragraph 6.11. of this annex.

5.4. Manufacturing data

Details of all fabrication processes, non-destructive examinations, production tests and batch tests shall be provided; The tolerances for all production processes such as heat treatment, end forming, resin mix ratio, filament winding tension and speed, curing times and temperatures, and auto-frettage procedures shall be specified. Surface finish, thread details, acceptance criteria for ultrasonic scanning (or equivalent), and maximum lot sizes for batch tests shall also be specified.

5.5. (Not allocated)

5.6. Fracture performance and NDE defect size

5.6.1. Fracture performance

The manufacturer shall demonstrate the Leak-Before-Break performance of the design as described in paragraph 6.7.

5.6.2. NDE defect size

Using the approach described in paragraph 6.15.2. the manufacturer shall establish the maximum defect size for non-destructive examination which will prevent the failure of the cylinder during its service life due to fatigue, or failure of the cylinder by rupture.

5.7. Specification sheet

A summary of the documents providing the information required in paragraph 5.1. above shall be listed on a specification sheet for each cylinder design. The title, reference number, revision numbers and dates of original issue and version issues of each document shall be given. All documents shall be signed or initialled by the issuer. The specification sheet shall be given a number, and revision numbers if applicable, that can be used to designate the cylinder design and shall carry the signature of the engineer responsible for the design. Space shall be provided on the specification sheet for a stamp indicating registration of the design.

5.8. Additional supporting data

Additional data which would support the application, such as the service history of material proposed for use, or the use of a particular cylinder design in other service conditions, shall be provided where applicable.

5.9. Approval and certification

5.9.1. Inspection and testing

Evaluation of conformity is required to be performed in accordance with the provisions of paragraph 9. of this Regulation.

In order to ensure that the cylinders are in compliance with this international Regulation, they shall be subject to inspection in accordance with paragraphs 6.13. and 6.14. below performed by the Type Approval Authority.

5.9.2. Test certificate

If the results of prototype testing according to paragraph 6.13. are satisfactory, the Type Approval Authority shall issue a test certificate. An example of a test certificate is given in Appendix D to this annex.

5.9.3. Batch acceptance certificate

The Type Approval Authority shall prepare an acceptance certificate as provided in Appendix D to this annex.

6. Requirements applicable to all cylinder types

6.1. General

The following requirements are generally applicable to the cylinder types specified in paragraphs 7. to 10. of this annex. The design of cylinders shall cover all relevant aspects which are necessary to ensure that every cylinder produced according to the design is fit for its purpose for the specified service life; Type CNG-1 steel cylinders designed in accordance with ISO 9809 and meeting all the requirements therein are only required to meet the requirements of paragraphs 6.3.2.4. and 6.9. to 6.13. below.

6.2. Design

This Regulation does not provide design formulas nor permissible stresses or strains, but requires the adequacy of the design to be established by appropriate calculations and demonstrated by cylinders being capable of consistently passing the materials, design qualification, production and batch tests specified in this Regulation. All designs shall ensure a "leakage before break" failure mode under feasible degradation of pressure parts during normal service. If leakage of metal cylinders or metal liners occurs, it shall be only by the growth of a fatigue crack.

6.3. Materials

6.3.1. Materials used shall be suitable for the service conditions specified in paragraph 4. of this annex. The design shall not have incompatible materials in contact. The design qualification tests for materials are summarized in Table 6.1.

6.3.2. Steel

6.3.2.1. Composition

Steels shall be aluminium and/or silicon killed and produced to predominantly fine grain practice. The chemical composition of all steels shall be declared and defined at least by:

(a) Carbon, manganese, aluminium and silicon contents in all cases;

(b) Nickel, chromium, molybdenum, boron and vanadium contents, and any other alloying elements intentionally added. The following limits shall not be exceeded in the cast analysis:

Tensile strength	*< 950 MPa*	*≥ 950 MPa*
Sulphur	0.020 per cent	0.010 per cent
Phosphorus	0.020 per cent	0.020 per cent
Sulphur and phosphorus	0.030 per cent	0.025 per cent

When carbon-boron steel is used, a hardenability test in accordance with ISO 642, shall be performed on the first and last ingot or slab of each heat of steel. The hardness as measured in a distance of 7.9 mm from the quenched end, shall be within the range 33-53 HRC, or 327-560 HV, and shall be certified by the material manufacturer;

6.3.2.2. Tensile properties

The mechanical properties of the steel in the finished cylinder or liner shall be determined in accordance with paragraph A.1. (Appendix A to this annex). The elongation for steel shall be at least 14 per cent;

6.3.2.3. Impact properties

The impact properties of the steel in the finished cylinder or liner shall be determined in accordance with paragraph A.2. (Appendix A to this annex). Impact values shall not be less than that indicated in Table 6.2 of this annex;

6.3.2.4. Bending properties

The bending properties of the welded stainless steel in the finished liner shall be determined in accordance with paragraph A.3. (Appendix A to this annex).

6.3.2.5. Macroscopic weld examination

A macroscopic weld examination for each type of welding procedure shall be performed. It shall show complete fusion and shall be free of any assembly faults or unacceptable defects as specified according to level C in EN ISO 5817.

6.3.2.6. Sulphide stress cracking resistance

If the upper limit of the specified tensile strength for the steel exceeds 950 MPa, the steel from a finished cylinder shall be subjected to a sulphide stress cracking resistance test in accordance with Appendix A to this annex, paragraph A.3. and meet the requirements listed therein.

6.3.3. Aluminium

6.3.3.1. Composition

Aluminium alloys shall be quoted in line with Aluminium Association practice for a given alloy system. The impurity limits for lead and bismuth in any aluminium alloy shall not exceed 0.003 per cent;

6.3.3.2. Corrosion tests

Aluminium alloys shall meet the requirements of the corrosion tests carried out in accordance with paragraph A.4. (Appendix A to this annex);

6.3.3.3. Sustained load cracking

Aluminium alloys shall meet the requirements of the sustained load cracking tests carried out in accordance with paragraph A.5. (Appendix A to this annex);

6.3.3.4. Tensile properties

The mechanical properties of the aluminium alloy in the finished cylinder shall be determined in accordance with paragraph A.l. (Appendix A to this annex). The elongation for aluminium shall be at least 12 per cent.

6.3.4. Resins

6.3.4.1. General

The material for impregnation may be thermosetting or thermoplastic resins. Examples of suitable matrix materials are epoxy, modified epoxy, polyester and vinyl ester thermosetting plastics, and polyethylene and polyamide thermoplastic material;

6.3.4.2. Shear strength

Resin materials shall be tested in accordance with paragraph A.26. (Appendix A to this annex), and meet the requirements therein;

6.3.4.3. Glass transition temperature

The glass transition temperature of the resin material shall be determined in accordance with ASTM D3418.

6.3.5. Fibres

Structural reinforcing filament material types shall be glass fibre, aramid fibre or carbon fibre. If carbon fibre reinforcement is used the design shall incorporate means to prevent galvanic corrosion of metallic components of the cylinder. The manufacturer shall keep on file the published specifications for composite materials, the material manufacturer's recommendations for storage, conditions and shelf life and the material manufacturer's certification that each shipment conforms to the said specification requirements. The fibre manufacturer shall certify that the fibre material properties conform to the manufacturer's specifications for the product.

6.3.6 Plastic liners

The tensile yield strength and ultimate elongation shall be determined in accordance with paragraph A.22. (Appendix A to this annex). Tests shall demonstrate the ductile properties of the plastic liner material at temperatures of -50 °C or lower by meeting the values specified by the manufacturer; the polymeric material shall be compatible with the service conditions specified in paragraph 4. of this annex. In accordance with the method described in paragraph A.23. (Appendix A to this annex), the softening temperature shall be at least 90 °C, and the melting temperature at least 100 °C.

6.4. Test pressure

The minimum test pressure used in manufacture shall be 30 MPa;

6.5. Burst pressures and fibre stress ratios

For all types of cylinder the minimum actual burst pressure shall not be less than the values given in Table 6.3 of this annex. For type CNG-2, CNG-3 and CNG-4 designs the composite over-wrap shall be designed for high reliability under sustained loading and cyclic loading. This reliability shall be achieved by meeting or exceeding the composite reinforcement stress ratio values given in Table 6.3 of this annex. Stress ratio is defined as the stress in the fibre at the specified minimum burst pressure divided by the stress in the fibre at working pressure. The burst ratio is defined as the actual burst pressure of the cylinder divided by the working pressure. For type CNG-4 designs, the stress ratio is equal to the burst ratio. For type CNG-2 and CNG-3 designs (metal-lined, composite over-wrapped) stress ratio calculations shall include:

(a) An analysis method with capability for non-linear materials (special purpose computer program or finite element analysis program);

(b) Elastic-plastic stress-strain curve for liner material shall be known and correctly modelled;

(c) Mechanical properties of composite materials shall be correctly modelled;

(d) Calculations shall be made at: auto-frettage, zero after auto-frettage, working and minimum burst pressures;

(e) Pre-stresses from winding tension shall be accounted for in the analysis;

(f) Minimum burst pressure shall be chosen such that the calculated stress at minimum burst pressure divided by the calculated stress at working pressure meets the stress ratio requirements for the fibre used;

(g) When analysing cylinders with hybrid reinforcement (two or more different fibre types), the load share between the different fibres shall be considered based on the different elastic moduli of the fibres. The stress ratio requirements for each individual fibre type shall be in accordance with the values given in Table 6.3. of this annex. Verification of the stress ratios may also be performed using strain gauges. An acceptable method is outlined in the informative Appendix E to this annex.

6.6. Stress analysis

A stress analysis shall be performed to justify the minimum design wall thicknesses. It shall include the determination of the stresses in liners and fibres of composite designs.

6.7. Leak-before-break (LBB) assessment

Types CNG-1, CNG-2 and CNG-3 cylinders shall demonstrate Leak-Before-Break (LBB) performance. The LBB performance test shall be carried out in accordance with paragraph A.6. (Appendix A to this annex). Demonstration of LBB performance is not required for cylinder designs that provide a fatigue life exceeding 45,000 pressure cycles when tested in accordance with paragraph A.13. (Appendix A to this annex). Two methods of LBB assessment are included for information in Appendix F to this annex.

6.8. Inspection and testing

The manufacturing inspection shall specify programmes and procedures for:

(a) Manufacturing inspection, tests and acceptance criteria; and

(b) Periodic in service inspection, tests and acceptance criteria. The interval of visual reinspection of the external cylinder surfaces shall be in accordance with paragraph 4.1.4. of this annex unless varied by the Type Approval Authority. The manufacturer shall establish the visual reinspection rejection criteria based on the results of pressure cycling tests performed on cylinders containing flaws. A guide for manufacturer's instructions for handling, use and inspection is provided in Appendix G to this annex.

6.9. Fire protection

All cylinders shall be protected from fire with pressure relief devices. The cylinder, its materials, pressure relief devices and any added insulation or protective material shall be designed collectively to ensure adequate safety during fire conditions in the test specified in paragraph A.15. (Appendix A to this annex).

Pressure relief devices shall be tested in accordance with paragraph A.24. (Appendix A to this annex).

6.10. Openings

6.10.1. General

Openings are permitted in heads only. Centre line of openings shall coincide with the longitudinal axis of the cylinder. Threads shall be clean cut, even, without surface discontinuities, and to gauge.

6.11. Cylinder supports

The manufacturer shall specify the means by which cylinders shall be supported for installation on vehicles. The manufacturer shall also supply support installation instructions, including clamping force and torque to provide the required restraining force but not cause unacceptable stress in the cylinder or damage to the cylinder surface.

6.12. Exterior environmental protection

The exterior of cylinders shall meet the requirements of the environmental test conditions of paragraph A.14. (Appendix A to this annex). Exterior protection may be provided by using any of the following:

(a) A surface finish giving adequate protection (e.g. metal sprayed on aluminium, anodizing); or

(b) The use of a suitable fibre and matrix material (e.g. carbon fibre in resin); or

(c) A protective coating (e.g. organic coating, paint) that shall meet the requirements of paragraph A.9. (Appendix A to this annex).

Any coatings applied to cylinders shall be such that the application process does not adversely affect the mechanical properties of the cylinder. The coating shall be designed to facilitate subsequent in service inspection and the manufacturer shall provide guidance on coating treatment during such inspection to ensure the continued integrity of the cylinder.

Manufacturers are advised that an environmental performance test that evaluates the suitability of coating systems is provided in the informative Appendix H to this annex.

6.13. Design qualification tests

For the approval of each cylinder type the material, design, manufacture and examination shall be proved to be adequate for their intended service by meeting the appropriate requirements of the material qualification tests summarized in Table 6.1 of this annex and the cylinder qualification tests summarized in Table 6.4 of this annex, with all tests in accordance with the

relevant methods of test as described in Appendix A to this annex. The test cylinders or liners shall be selected and the tests witnessed by the Competent Authority. If more cylinders or liners are subjected to the tests than are required by this annex, all results shall be documented.

6.14. Batch tests

The batch tests specified in this annex for each cylinder type shall be conducted on cylinders or liners taken from each batch of finished cylinders or liners. Heat treated witness samples shown to be representative of finished cylinders or liners may also be used. Batch tests required for each cylinder type are specified in Table 6.5 of this annex.

6.15. Production examinations and tests

6.15.1. General

Production examinations and tests shall be carried out on all cylinders produced in a batch. Each cylinder shall be examined during manufacture and after completion by the following means:

(a) Ultrasonic scanning (or demonstrated equivalent) of metallic cylinders and liners in accordance with BS 5045, Part 1, Annex B, or demonstrated equivalent method, to confirm that the maximum defect size present is smaller than the size specified in the design;

(b) Verification that the critical dimensions and mass of the completed cylinder and of any liner and over-wrapping are within design tolerances;

(c) Verification of compliance with specified surface finish with special attention to deep drawn surfaces and folds or laps in the neck or shoulder of forged or spun end enclosures or openings;

(d) Verification of markings;

(e) Hardness tests of metallic cylinders and liners in accordance with paragraph A.8. (Appendix A to this annex) shall be carried out after the final heat treatment and the values thus determined shall be in the range specified for the design;

(f) Hydrostatic proof test in accordance with paragraph A.11. (Appendix A to this annex).

A summary of critical production inspection requirements to be performed on every cylinder is provided in Table 6.6 of this annex;

6.15.2. Maximum defect size

For type CNG-1, CNG-2 and CNG-3 designs, the maximum defect size at any location in the metal cylinder or metal liner that will not grow to a critical size within the specified service life shall be determined. The critical defect size is defined as the limiting through-wall (cylinder or liner) thickness defect that would allow stored gas to be discharged without rupturing the cylinder. Defect sizes for the rejection criteria for ultrasonic scanning, or equivalent shall be smaller than the maximum allowable defect sizes. For type CNG-2 and CNG-3 designs assume that there shall be no damage to composite due to any time-dependent mechanisms; the allowable defect size for NDE shall be determined by an appropriate method. Two such methods are outlined in the informative Appendix F to this annex.

6.16. Failure to meet test requirements

In the event of failure to meet test requirements retesting or reheat treatment and retesting shall be carried out as follows:

(a) If there is evidence of a fault in carrying out a test, or an error of measurement, a further test shall be performed. If the result of this test is satisfactory, the first test shall be ignored;

(b) If the test has been carried out in a satisfactory manner, the cause of test failure shall be identified.

If the failure is considered to be due to the heat treatment applied, the manufacturer may subject all the cylinders of the batch to a further heat treatment.

If the failure is not due to the heat treatment applied, all the identified defective cylinders shall be rejected or repaired by an approved method. The non-rejected cylinders are then considered as a new batch.

In both cases the new batch shall be retested. All the relevant prototype or batch tests needed to prove the acceptability of the new batch shall be performed again. If one or more tests prove even partially unsatisfactory, all cylinders of the batch shall be rejected.

6.17. Change of design

A design change is any change in the selection of structural materials or dimensional change not attributable to normal manufacturing tolerances.

Minor design changes shall be permitted to be qualified through a reduced test program. Changes of design specified in Table 6.7 below shall require design qualification testing as specified in the table.

Table 6.1
Material design qualification test

	Relevant paragraph of this annex				
	Steel	*Aluminium*	*Resins*	*Fibres*	*Plastic liners*
Tensile properties	6.3.2.2.	6.3.3.4.		6.3.5.	6.3.6.
Impact properties	6.3.2.3.				
Bending properties	6.3.2.4.				
Weld examination	6.3.2.5.				
Sulphide stress cracking resistance	6.3.2.6.				
Sustained load crack resistance		6.3.3.3.			
Stress corrosion cracking		6.3.3.2.			
Shear strength			6.3.4.2.		
Glass transition temperature			6.3.4.3.		
Softening/Melting temperature					6.3.6.
Fracture mechanics*	6.7.	6.7.			

* Not required if flawed cylinder test approach in paragraph A.7. of Appendix A to this annex is used.

Table 6.2
Impact test acceptable values

Cylinder diameter D [mm]	> 140			≤ 140
Direction of testing	transverse			longitudinal
Width of test piece [mm]	3 - 5	> 5 - 7.5	> 7.5 - 10	3 to 5
Test temperature [°C]	-50			-50
Impact strength [J/cm²]				
Mean of 3 specimens	30	35	40	60
Individual specimen	24	28	32	48

Table 6.3
Minimum actual burst values and stress ratios

	CNG-1 All-metal	*CNG-2 Hoop-wrapped*		*CNG-3 Fully-wrapped*		*CNG-4 All-composite*	
	Burst pressure [MPa]	*Stress ratio [MPa]*	*Burst pressure [MPa]*	*Stress ratio [MPa]*	*Burst pressure [MPa]*	*Stress ratio [MPa]*	*Burst pressure [MPa]*
All metal	45						
Glass		2.75	50 1)	3.65	70 1)	3.65	73
Aramid		2.35	47	3.10	60 1)	3.1	62
Carbon		2.35	47	2.35	47	2.35	47
Hybrid		2)		2)		2)	

Note 1) - Minimum actual burst pressure. In addition, calculations shall be performed in accordance with paragraph 6.5. of this annex to confirm that the minimum stress ratio requirements are also met.
Note 2) - Stress ratios and burst pressures shall be calculated in accordance with paragraph 6.5. of this annex.

Table 6.4
Cylinder design qualification tests

Test and annex reference	*Cylinder type*			
	CNG-1	*CNG-2*	*CNG-3*	*CNG-4*
A.12. Burst	X *	X	X	X
A.13. Ambient temperature/cycle	X *	X	X	X
A.14. Acid environment test		X	X	X
A.15. Bonfire		X	X	X
A.16. Penetration	X	X	X	X
A.17. Flaw tolerance	X	X	X	X
A.18. High temperature creep		X	X	X
A.19. Stress rupture		X	X	X
A.20. Drop test			X	X
A.21. Permeation				X
A.24. PRD performance		X	X	X
A.25. Boss torque test	X			X
A.27. Natural gas cycling				X
A.6. LBB assessment		X	X	
A.7. Extreme temperature/cycle	X	X	X	X

X = required
* = Not required for cylinders designed to ISO 9809 (ISO 9809 already provides for these tests).

Table 6.5
Batch tests

Test and annex reference	*Cylinder type*			
	CNG-1	*CNG-2*	*CNG-3*	*CNG-4*
A.12. Burst	X	X	X	X
A.13. Ambient temperature/cycle	X	X	X	X
A.1. Tensile	X	X †	X †	
A.2. Impact (steel)	X	X †	X †	
A.9.2. Coating*	X	X	X	X

X = required
* = Except where no protective coating is used
† = Tests on liner material

Table 6.6
Critical production inspection requirements

Type	*Cylinder type*			
Inspection requirements	*CNG-1*	*CNG-2*	*CNG-3*	*CNG-4*
Critical dimensions	X	X	X	X
Surface finish	X	X	X	X
Flaws (ultrasonic or equivalent)	X	X	X	
Hardness of metal cylinders and metal liners	X	X	X	
Hydrostatic proof test	X	X	X	X
Leak test				X
Markings	X	X	X	X

X = required

Table 6.7
Change of design

	Type of test								
Design change	*Burst Hydrostatic A.12*	*Cycling ambient temp: A.13*	*Environm. A.14*	*Bonfire A.15*	*Penetration A.16*	*Flaw tolerance A.17*	*High temp: Creep A.18 Stress rupture A.19 Drop test A.20*	*Permeation A.21 CNG Boss torque A.25 Cycling A.27*	*PRD performance A.24*
Fibre manufacturer	X	X					X*	X†	
Metallic cylinder or liner material	X	X	X*	X	X*	X	X*		
Plastic liner material		X	X					X†	
Fibre material	X	X	X	X	X	X	X	X†	
Resin material			X		X	X	X		
Diameter change ≤ 20 per cent	X	X							
Diameter change > 20 per cent	X	X		X	X*	X			
Length change ≤ 50 per cent	X			X‡					
Length change > 50 per cent	X	X		X‡					
Working pressure change ≤ 20 per cent@	X	X							
Dome shape	X	X						X†	
Opening size	X	X							
Coating change			X						
End boss design								X†	
Change in manuf. process	X	X							
Pressure relief device				X					X

X = required
* Test not required on metal (CNG-1) designs:
† Test only required on all-composite (CNG-4) designs
‡ Test only required when length increases
@ Only when thickness changes proportional to diameter and/or pressure change.

7. Type CNG-1 metal cylinders

7.1. General

The design shall identify the maximum size of an allowable defect at any point in the cylinder which will not grow to a critical size within the specified retest period, or service life if no retest is specified, of a cylinder operating to the working pressure. Determination of leak-before-break (LBB) performance shall be done in accordance with the appropriate procedures defined in paragraph A.6. (Appendix A to this annex). Allowable defect size shall be determined in accordance with paragraph 6.15.2. above.

Cylinders designed in accordance with ISO 9809 and meeting all the requirements therein are only required to meet the materials test requirements of paragraph 6.3.2.4. above and the design qualification test requirements of paragraph 7.5., except paragraphs 7.5.2. and 7.5.3. below.

7.2. Stress analysis

The stresses in the cylinder shall be calculated for 2 MPa, 20 MPa, test pressure and design burst pressure. The calculations shall use suitable analysis techniques using thin-shell theory that takes into account out-of-plane bending of the shell to establish stress distributions at the neck, transition regions and the cylindrical part of the cylinder.

7.3. Manufacturing and production test requirements

7.3.1. General

The ends of aluminium cylinders shall not be closed by a forming process. The base ends of steel cylinders which have been closed by forming, except those cylinders designed in accordance with ISO 9809, shall be NDE inspected or equivalent. Metal shall not be added in the process of closure at the end. Each cylinder shall be examined before end forming operations for thickness and surface finish.

After end forming the cylinders shall be heat treated to the hardness range specified for the design. Localized heat treatment is not permitted.

When a neck ring, foot ring or attachments for support are provided, it shall be of material compatible with that of the cylinder and shall be securely attached by a method other than welding, brazing or soldering.

7.3.2. Non-destructive examination

The following tests shall be carried out on each metallic cylinder:

(a) Hardness test in accordance with paragraph A.8. (Appendix A to this annex);

(b) Ultrasonic examination, in accordance with BS 5045, Part 1, Annex I, or demonstrated equivalent NDT method, to ensure that the maximum defect size does not exceed the size specified in the design as determined in accordance with paragraph 6.15.2. above.

7.3.3. Hydrostatic pressure testing

Each finished cylinder shall be hydrostatically pressure tested in accordance with paragraph A.11. (Appendix A to this annex).

7.4. Cylinder batch tests

Batch testing shall be conducted on finished cylinders which are representative of normal production and are complete with identification marks. Two cylinders shall be randomly selected from each batch. If more cylinders are subjected to the tests than are required by this annex, all results shall be documented. The following tests shall as a minimum be carried out on these.

(a) Batch materials tests. One cylinder, or a heat treat witness sample representative of a finished cylinder, shall be subjected to the following tests:

(i) Critical dimensions checked against the design;

(ii) One tensile test in accordance with paragraph A.1. (Appendix A to this annex) and meet the requirements of the design;

(iii) For steel cylinders, three impact tests in accordance with paragraph A.2. (Appendix A to this annex) and meet the requirements of paragraph 6.3.2.3. above;

(iv) When a protective coating is a part of the design, the coating shall be tested in accordance with paragraph A.9.2. (Appendix A to this annex);

All cylinders represented by a batch test which fail to meet the specified requirements shall follow the procedures specified in paragraph 6.16. above.

Where the coating fails to meet the requirements of paragraph A.9.2. (Appendix A to this annex), the batch shall be 100 per cent inspected to remove similarly defective cylinders. The coating on all defective cylinders may be stripped and recoated. The coating batch test shall then be repeated;

(b) Batch burst test. One cylinder shall be hydrostatically pressurized to burst in accordance with paragraph A.12. (Appendix A to this annex).

If the burst pressure is less than the minimum calculated burst pressure the procedures specified in paragraph 6.16. above shall be followed.

(c) Periodic pressure cycling test. Finished cylinders shall be pressure cycled in accordance with paragraph A.13. (Appendix A to this annex) at a test frequency defined as follows:

(i) One cylinder from each batch shall be pressure cycled for a total of 1,000 times the specified service life in years, with a minimum 15,000 cycles;

(ii) On 10 sequential production batches of a design family (i.e. similar materials and processes), should none of the pressure cycled cylinders in (i) above leak or rupture in less than 1,500 cycles times the specified life in years (minimum 22,500 cycles) then the pressure cycle test can be reduced to one cylinder from every 5 batches of production;

(iii) On 10 sequential production batches of a design family, should none of the pressure cycled cylinders in (i) above leak or rapture in less than 2,000 cycles times the specified service life in years (minimum 30,000 cycles) then the pressure cycle test can be reduced to one cylinder from every 10 batches of production;

(iv) Should more than 6 months have expired since the last batch of production. Then a cylinder from the next batch of production shall be pressure cycle tested in order to maintain the reduced frequency of batch testing in (ii) or (iii) above.

(v) Should any reduced frequency pressure cycle test cylinder in (ii) or (iii) above fail to meet the required number of pressure cycles (minimum 22,500 or 30,000 pressure cycles, respectively,) then it shall be necessary to repeat the batch pressure cycle test frequency in (i) for a minimum 10 production batches in order to re-establish the reduced frequency of batch pressure cycle testing in (ii) or (iii) above.

(vi) Should any cylinder in (i), (ii), or (iii) above fail to meet the minimum cycle life requirement of 1,000 cycles times the specified service life in years (minimum 15,000 cycles), then the cause of failure shall be determined and corrected following the procedures in paragraph 6.16. of this annex. The pressure cycle test shall then be repeated on an additional three cylinders from that batch. Should any of the three additional cylinders fail to meet the minimum pressure cycling requirement of 1,000 cycles times the specified service life in years, then the batch shall be rejected.

7.5. Cylinder design qualification tests

7.5.1. General

Qualification testing shall be conducted on finished cylinders which are representative of normal production and complete with identification marks. Selection, witnessing and documentation of the results shall be in accordance with paragraph 6.13. above.

7.5.2. Hydrostatic pressure burst test

Three representative cylinders shall be hydrostatically pressurised to failure in accordance with paragraph A.12. (Appendix A to this annex). The cylinder burst pressures shall exceed the minimum burst pressure calculated by the stress analysis for the design, and shall be at least 45 MPa.

7.5.3. Ambient temperature pressure cycling test.

Two finished cylinders shall be pressure cycled at ambient temperature in accordance with paragraph A.13. (Appendix A to this annex) to failure, or to a minimum of 45,000 cycles. The cylinders shall not fail before reaching the specified service life in years times 1,000 cycles. Cylinders exceeding 1,000 cycles times the specified service life in years shall fail by leakage and not by rupture. Cylinders which do not fail within 45,000 cycles shall be destroyed either by continuing the cycling until failure occurs, or by hydrostatically pressurising to burst. The number of cycles to failure and the location of the failure initiation shall be recorded.

7.5.4. Bonfire test

Tests shall be conducted in accordance with paragraph A.15. (Appendix A to this annex) and meet the requirements therein.

7.5.5. Penetration test

Test shall be conducted in accordance with paragraph A.16. (Appendix A to this annex) and meet the requirements therein.

7.5.6. LBB performance

For cylinder designs not exceeding 45,000 cycles when tested as per paragraph 7.5.3. above, LBB performance tests shall be conducted in accordance with paragraph A.6. of Appendix 1 to this annex and meet the requirements therein.

8. Type CNG-2 hoop-wrapped cylinders

8.1. General

During pressurisation, this type of cylinder design has a behaviour in which the displacements of the composite over-wrap and the metal liner are linearly superimposed. Due to different techniques of manufacture, this annex does not give a definite method for design.

Determination of the leak-before-break (LBB) performance shall be in accordance with the appropriate procedures defined in paragraph A.6. (Appendix A to this annex). Allowable defect size shall be determined in accordance with paragraph 6.15.2. above.

8.2. Design requirements

8.2.1. Metal liner

The metal liner shall have a minimum actual burst pressure of 26 MPa.

8.2.2. Composite over-wrap

The tensile stress in the fibres shall meet the requirements of paragraph 6.5. above.

8.2.3. Stress analysis

The stresses in the composite and in the liner after prestress shall be calculated. The pressures used for these calculations shall be zero, 2 MPa, 20 MPa test pressure and design burst pressure. The calculations shall use suitable analysis techniques using thin-shell theory taking account of non-linear material behaviour of the liner to establish stress distributions at the neck, transition regions and the cylindrical part of the liner.

For designs using auto-frettage to provide prestress, the limits within which the auto-frettage pressure shall fall shall be calculated.

For designs using controlled tension winding to provide prestress, the temperature at which it is performed, the tension required in each layer of composite and the consequent prestress in the liner shall be calculated.

8.3. Manufacturing requirements

8.3.1. General

The composite cylinder shall be fabricated from a liner over-wrapped with continuous filament windings. Filament winding operations shall be

computer or mechanically controlled. The filaments shall be applied under controlled tension during winding. After winding is complete, thermosetting resins shall be cured by heating, using a predetermined and controlled time-temperature profile.

8.3.2. Liner

The manufacture of a metallic liner shall meet the requirements given under paragraph 7.3. above for the appropriate type of liner construction.

8.3.3. Over-wrap

The cylinders shall be fabricated in a filament winding machine. During winding the significant variables shall be monitored within specified tolerances, and documented in a winding record. These variables can include but are not limited to:

(a) Fibre type including sizing;

(b) Manner of impregnation;

(c) Winding tension;

(d) Winding speed;

(e) Number of rovings;

(f) Band width;

(g) Type of resin and composition;

(h) Temperature of the resin;

(i) Temperature of the liner.

8.3.3.1. Curing of thermosetting resins

If a thermosetting resin is used, the resin shall be cured after filament winding. During the curing, the curing cycle (i.e. the time-temperature history) shall be documented.

The curing temperature shall be controlled and shall not affect the material properties of the liner. The maximum curing temperature for cylinders with aluminium liners is 177 °C.

8.3.4. Auto-frettage

Auto-frettage, if used, shall be carried out before the hydrostatic pressure test. The auto-frettage pressure shall be within the limits established in paragraph 8.2.3. above, and the manufacturer shall establish the method to verify the appropriate pressure.

8.4. Production test requirements

8.4.1. Non-destructive examination

Non-destructive examinations shall be carried out in accordance with a recognized ISO or an equivalent standard. The following tests shall be carried out on each metallic liner:

(a) Hardness test in accordance with paragraph A.8. (Appendix A to this annex);

(b) Ultrasonic examination, in accordance with BS 5045, Part 1, Annex 1B, or demonstrated equivalent NDT method, to ensure that the maximum defect size does not exceed the size specified in the design.

8.4.2. Hydrostatic pressure testing

Each finished cylinder shall be hydrostatically pressure tested in accordance with paragraph A.11. (Appendix A to this annex). The manufacturer shall define the appropriate limit of permanent volumetric expansion for the test pressure used, but in no case shall the permanent expansion exceed 5 per cent of the total volumetric expansion at test pressure. Any cylinders not meeting the defined rejection limit shall be rejected and either destroyed or used for batch rest purposes.

8.5. Cylinder batch tests

8.5.1. General

Batch testing shall be conducted on finished cylinders which are representative of normal production and are complete with identification marks. Two cylinders, or a cylinder and a liner as appropriate, shall be randomly selected from each batch. If more cylinders are subjected to the tests than are required by this annex, all results shall be documented. The following tests shall as a minimum be carried out on these.

Where defects are detected in over-wrapping before any auto-frettage or hydrostatic pressure testing, the over-wrapping may be completely removed and replaced;

(a) Batch materials tests. One cylinder, or liner, or heat treat witness sample that is representative of a finished cylinder, shall be subjected to the following tests:

(i) Dimensions checked against the design;

(ii) One tensile test in accordance with paragraph A.1. (Appendix A to this annex) and meet the requirements of the design;

(iii) For steel liners, three impact tests in accordance with paragraph A.2. (Appendix A to this annex) and meet the requirements of the design;

(iv) When a protective coating is a part of the design, the coating shall be tested in accordance with paragraph A.9.2. (Appendix A to this annex) and meet the requirements therein. All cylinders or liners represented by a batch test which fails to meet the requirements specified shall follow the procedures specified in paragraph 6.16. above.

Where the coating fails to meet the requirements of paragraph A.9.2. (Appendix A to this annex), the batch shall be 100 per cent inspected to remove similarly defective cylinders. The coating on all defective cylinders may be stripped using a method that does not affect the integrity of the composite wrapping, and recoated. The coating batch test shall then be repeated.

(b) Batch burst test. One cylinder shall be tested in accordance with the requirements of paragraph 7.4.(b) above;

(c) Periodic pressure cycling test. In accordance with the requirements of paragraph 7.4.(c) above.

8.6. Cylinder design qualification tests

8.6.1. General

Qualification testing shall be conducted on cylinders which are representative of normal production and complete with identification marks. Selection, witnessing and documentation of the results shall comply with paragraph 6.13. above.

8.6.2. Hydrostatic pressure burst test

(a) One liner shall be hydrostatically burst in accordance with paragraph A.12. (Appendix A to this annex). The burst pressure shall exceed the minimum burst pressure specified for the liner design;

(b) Three cylinders shall be hydrostatically burst in accordance with paragraph A.12. (Appendix A to this annex). Cylinder burst pressures shall exceed the specified minimum burst pressure established by the stress analysis for the design, in accordance with Table 6.3, and in no case less than the value necessary to meet the stress ratio requirements of paragraph 6.5. above.

8.6.3. Ambient temperature pressure cycling test

Two finished cylinders shall be pressure cycle tested at ambient temperature in accordance with paragraph A.13. (Appendix A to this annex) to failure, or to a minimum of 45,000 cycles. The cylinders shall not fail before reaching the specified service life in years times 1,000 cycles. Cylinders exceeding 1,000 cycles times the specified service life in years shall fail by leakage and not by rupture. Cylinders which do not fail within 45,000 cycles shall be destroyed either by continuing the cycling until failure occurs, or by hydrostatically pressurizing to burst. Cylinders exceeding 45,000 cycles are permitted to fail by rupture. The number of cycles to failure and the location of the failure initiation shall be recorded.

8.6.4. Acid environment test

One cylinder shall be tested in accordance with paragraph A.14. (Appendix A to this annex) and meet the requirements therein. An optional environmental test is included in the informative Appendix H to this annex.

8.6.5. Bonfire test

Finished cylinders shall be tested in accordance with paragraph A.15. (Appendix A to this annex) and meet the requirements therein.

8.6.6. Penetration test

One finished cylinder shall be tested in accordance with paragraph A.16. (Appendix A to this annex) and meet the requirements therein.

8.6.7. Flaw tolerance tests

One finished cylinder shall be tested in accordance with paragraph A.17. (Appendix A to this annex) and meet the requirements therein.

8.6.8. High temperature creep test

In designs where the glass transition temperature of the resin does not exceed the maximum design material temperature by at least 20 °C, one cylinder shall be tested in accordance with paragraph A.18. (Appendix A to this annex) and meet the requirements therein.

8.6.9. Accelerated stress rupture test

One finished cylinder shall be tested in accordance with paragraph A.19. (Appendix A to this annex) and meet the requirements therein.

8.6.10. LBB performance

For cylinder designs not exceeding 45,000 cycles when tested as per paragraph 8.6.3. above, LBB performance tests shall be conducted in accordance with paragraph A.6. of Appendix A to this annex and meet the requirements therein.

8.6.11. Extreme temperature pressure cycling test

One finished cylinder shall be tested in accordance with paragraph A.7. (Appendix A to this annex) and meet the requirements therein.

9. Type CNG-3 fully-wrapped cylinders

9.1. General

During pressurisation, this type of cylinder has a behaviour in which the displacements of the composite over-wrap and the liner are superimposed. Due to different techniques of manufacture, this annex does not give a definite method for design; Determination of the leak-before-break (LBB) performance shall be in accordance with the appropriate procedures defined in paragraph A.6. (Appendix A to this annex). Allowable defect size shall be determined in accordance with paragraph 6.15.2. above.

9.2. Design requirements

9.2.1. Metal liner

The compressive stress in the liner at zero pressure and 15 °C shall not cause the liner to buckle or crease.

9.2.2. Composite over-wrap

The tensile stress in the fibres shall meet the requirements of paragraph 6.5. above.

9.2.3. Stress analysis

The stresses in the tangential and longitudinal direction of the cylinder in the composite and in the liner after pressure shall be calculated. The pressure used for these calculations shall be zero, working pressure, 10 per cent of working pressure, test pressure and design burst pressure. The limits, within which auto-frettaging pressure shall fall, shall be calculated. The calculations shall use suitable analysis techniques using thin-shell theory taking account of non-linear material behaviour of the liner to establish stress distributions at the neck, transition regions and the cylindrical part of the liner.

9.3. Manufacturing requirements

Manufacturing requirements shall be in accordance with paragraph 8.3. above except that the over-wrap shall also include helically wound filaments.

9.4. Production test requirements

Production test requirements shall be in accordance with the requirements of paragraph 8.4. above.

9.5. Cylinder batch tests

The batch tests shall be in accordance with the requirements of paragraph 8.5. above.

9.6. Cylinder design qualification tests

Cylinder design qualification tests shall be in accordance with the requirements of paragraph 8.6. above, and paragraph 9.6.1. below, except that the liner burst in paragraph 8.6. above is not required.

9.6.1. Drop test

One or more finished cylinders shall be drop tested in accordance with paragraph A.30. (Appendix A to this annex).

10. Type CNG-4 all-composite cylinders

10.1. General

This annex does not give a definite method for the design of cylinders with polymeric liners because of the variety of cylinder designs possible.

10.2. Design requirements

Design calculations shall be used to provide justification of design adequacy. The tensile stresses in the fibres shall meet the requirements of paragraph 6.5. above.

Tapered and straight threads in accordance with paragraph 6.10.2. or 6.10.3. above shall be used on the metal end bosses.

Metal end bosses with threaded openings shall be able to withstand a torque force of 500 Nm, without damaging the integrity of the connection to the non-metallic liner. The metal end bosses connected to the non-metallic liner shall be of a material compatible with the service conditions specified in paragraph 4. of this annex.

10.3. Stress analysis

The stresses in the tangential and longitudinal direction of the cylinder in the composite and in the liner shall be calculated. The pressures used for these calculations shall be zero, working pressure, test pressure and design burst pressure. The calculations shall use suitable analysis techniques to establish stress distribution throughout the cylinder.

10.4. Manufacturing requirements

Manufacturing requirements shall be in accordance with paragraph 8.3. above except that the curing temperature for thermosetting resins shall be at least 10 °C below the softening temperature of the plastic liner.

10.5. Production test requirements

10.5.1. Hydrostatic pressure testing

Each finished cylinder shall be hydrostatically pressure tested in accordance with paragraph A.11. (Appendix A to this annex). The manufacturer shall define the appropriate limit of elastic expansion for the test pressure used, but

in no case shall the elastic expansion of any cylinder exceed the average batch value by more than 10 per cent. Any cylinders not meeting the defined rejection limit shall be rejected and either destroyed or used for batch test purposes.

10.5.2. Leak testing

Each finished cylinder shall be leak tested in accordance with paragraph A.10. (Appendix A to this annex) and meet the requirements therein.

10.6. Cylinder batch tests

10.6.1. General

Batch testing shall be conducted on finished cylinders which are representative of normal production and are complete with identification marks. One cylinder shall be randomly selected from each batch. If more cylinders are subjected to the tests that are required by this annex, all results shall be documented. The following tests shall as a minimum be carried out on these cylinders.

(a) Batch materials test

One cylinder, or liner, or liner witness sample that is representative of a finished cylinder, shall be subjected to the following tests:

(i) Dimensions checked against the design;

(ii) One tensile test of the plastic liner in accordance with paragraph A.22. (Appendix A to this annex) and meet the requirements of the design;

(iii) The melt temperature of the plastic liner shall be tested in accordance with paragraph A.23. (Appendix A to this annex), and meet the requirements of the design;

(iv) When a protective coating is a part of the design, the coating shall be tested in accordance with paragraph A.9.2. (Appendix A to this annex). Where the coating fails to meet the requirements of paragraph A.9.2. (Appendix A to this annex), the batch shall be 100 per cent inspected to remove similarly defective cylinders. The coating on all defective cylinders may be stripped using a method that does not affect the integrity of the composite wrapping, and recoated. The coating batch test shall then be repeated.

(b) Batch burst test

One cylinder shall be tested in accordance with the requirements of paragraph 7.4.(b) above;

(c) Periodic pressure cycling test

On one cylinder the end boss shall be torque tested to 500 Nm in accordance with the test method in paragraph A.25. (Appendix A to this annex). The cylinder shall then be pressure cycle tested in accordance with the procedures provided in paragraph 7.4.(c) above.

Following the required pressure cycling, the cylinder shall be leak tested in accordance with the method described in paragraph A.10. (Appendix A to this annex) and meet the requirements therein.

10.7. Cylinder design qualification tests

10.7.1. General

Cylinder design qualification tests shall be in accordance with the requirements of paragraphs 8.6., 10.7.2., 10.7.3. and 10.7.4. of this annex, except that the LBB performance in paragraph 8.6.10. above is not required.

10.7.2. Boss torque test

One cylinder shall be tested in accordance with paragraph A.25. (Appendix A to this annex).

10.7.3. Permeation test

One cylinder shall be tested for permeation in accordance with paragraph A.21. (Appendix A to this annex) and meet the requirements therein.

10.7.4. Natural gas cycling test

One finished cylinder shall be tested in accordance with paragraph A.27. (Appendix A to this annex) and meet the requirements therein.

11. Marking

11.1. Provision of marking

On each cylinder the manufacturer shall provide clear permanent markings not less than 6 mm high. Marking shall be made either by labels incorporated into resin coatings, labels attached by adhesive, low stress stamps used on the thickened ends of type CNG-1 and CNG-2 designs, or any combination of the above. Adhesive labels and their application shall be in accordance with ISO 7225, or an equivalent standard. Multiple labels are allowed and should be located such that they are not obscured by mounting brackets. Each cylinder complying with this annex shall be marked as follows:

(a) Mandatory information:

(i) "CNG ONLY";

(ii) "DO NOT USE AFTER XX/XXXX", where "XX/XXX" identifies the month and year of expiry;[1]

(iii) Manufacturer's identification;

(iv) Cylinder identification (applicable part number and a serial number unique for every cylinder);

(v) Working pressure and temperature;

(vi) ECE Regulation number, along with cylinder type and certification registration number;

[1] The expiry date shall not exceed the specified service life. The expiry date may be applied to the cylinder at the time of dispatch, provided that the cylinders have been stored in a dry location without internal pressure.

(vii) The pressure relief devices and/or valves which are qualified for use with the cylinder, or the means for obtaining information on qualified fire protection systems;

(viii) When labels are used, all cylinders shall have a unique identification number stamped on an exposed metal surface to permit tracing in the event that the label is destroyed.

(b) Non-mandatory information:

On a separate label(s) the following non-mandatory information may be provided:

(i) Gas temperature range, e.g. -40 °C to 65 °C;

(ii) Nominal water capacity of the cylinder to two significant numbers. e.g. 120 litres;

(iii) Date of original pressure test (month and year).

The markings shall be placed in the listed sequence but the specific arrangement may be varied to match the space available. An acceptable example of mandatory information is:

CNG ONLY DO NOT USE AFTER ../.... Manufacturer/Part Number/Serial Number 20 MPa/15 °C ECE R 110 CNG-2 (registration No. …) "Use Only Manufacturer-Approved Pressure Relief Device"

12. Preparation for dispatch

Prior to dispatch from the manufacturers shop, every cylinder shall be internally clean and dried. Cylinders not immediately closed by the fitting of a valve, and safety devices if applicable, shall have plugs, which prevent entry of moisture and protect threads, fitted to all openings. A corrosion inhibitor (e.g. oil-containing) shall be sprayed into all steel cylinders and liners prior to dispatch.

The manufacturer's statement of service and all necessary information to ensure the proper handling, use and in-service inspection of the cylinder shall be supplied to the purchaser. The statement shall be in accordance with Appendix D to this annex.

Annex 3A - Appendix A

Test methods

A.1. Tensile tests, steel and aluminium

A tensile test shall be carried out on the material taken from the cylindrical part of the finished cylinder using a rectangular test piece shaped in accordance with the method described in ISO 9809 for steel and ISO 7866 for aluminium. For cylinders with welded stainless steel liners, tensile tests shall be also carried out on material taken from the welds in accordance with the method described in paragraph 8.4. of EN 13322-2. The two faces of the test pieces representing the inside and outside surface of the cylinder shall not be machined. The tensile test shall be carried out in accordance with ISO 6892.

Note - Attention is drawn to the method of measurement of elongation described in ISO 6892, particularly in cases where the tensile test piece is tapered, resulting in a point of fracture away from the middle of the gauge length.

A.2. Impact test, steel cylinders and steel liners

The impact test shall be carried out on the material taken from the cylindrical part of the finished cylinder on three test pieces in accordance with ISO 148. The impact test pieces shall be taken in the direction as required in Table 6.2 of Annex 3A from the wall of the cylinder. For cylinders with welded stainless steel liners, impact tests shall be also carried out on material taken from the weld in accordance with the method described in paragraph 8.6. of EN 13322-2. The notch shall be perpendicular to the face of the cylinder wall. For longitudinal tests the test piece shall be machined all over (on six faces), if the wall thickness does not permit a final test piece width of 10 mm, the width shall be as near as practicable to the nominal thickness of the cylinder wall. The test pieces taken in transverse direction shall be machined on four faces only, the inner and outer face of the cylinder wall unmachined.

A.3. Sulphide stress cracking test for steel

Except as identified in the following, testing shall be conducted in accordance with Method A-NACE Standard Tensile Test procedures, as described in NACE Standard TM0177-96. Tests shall be conducted on a minimum of three tensile specimens with a gauge diameter of 3.81 mm (0.150 inches) machined from the wall of a finished cylinder or liner. The specimens shall be placed under a constant tensile load equal to 60 per cent of the specified minimum yield strength of the steel, immersed in a solution of distilled water buffered with 0.5 per cent (mass fraction) sodium acetate trihydrate and adjusted to an initial pH of 4.0, using acetic acid.

The solution shall be continuously saturated at room temperature and pressure with 0.414 kPa (0.06 psia) hydrogen sulphide (balance nitrogen). The tested specimens shall not fail within a test duration of 144 hours.

A.4. Corrosion tests, aluminium

Corrosion tests for aluminium alloys shall be carried out in accordance with Annex A of ISO/DIS 7866 and meet the requirements therein.

A.5. Sustained load cracking tests, aluminium

The resistance to SLC shall be carried out in accordance with Annex D of ISO/DIS 7866 and shall meet the requirements therein;

A.6. Leak-Before-Break (LBB) performance test

Three finished cylinders shall be pressure cycled between not more than 2 MPa and nor less than 30 MPa at a rate not to exceed 10 cycles per minute.

All cylinders shall fail by leakage.

A.7. Extreme temperature pressure cycling

Finished cylinders, with the composite wrapping free of any protective coating, shall be cycle tested, without showing evidence of rupture, leakage, or fibre unravelling, as follows:

(a) Condition for 48 hours at zero pressure, 65 °C or higher, and 95 per cent or greater relative humidity. The intent of this requirement shall be deemed met by spraying with a fine spray or mist of water in a chamber held at 65 °C;

(b) Hydrostatically pressurized for 500 cycles times the specified service life in years between not more than 2 MPa and not less than 26 MPa at 65 °C or higher and 95 per cent humidity;

(c) Stabilize at zero pressure and ambient temperature;

(d) Then pressurize from not more than 2 MPa to not less than 20 MPa for 500 cycles times the specified service life in years at -40 °C or lower;

The pressure cycling rate of (b) shall not exceed 10 cycles per minute. The pressure cycling rate of (d) shall not exceed 3 cycles per minute unless a pressure transducer is installed directly within the cylinder. Adequate recording instrumentation shall be provided to ensure the minimum temperature of the fluid is maintained during the low temperature cycling.

Following pressure cycling at extreme temperatures, cylinders shall be hydrostatically pressured to failure in accordance with the hydrostatic burst test requirements, and achieve a minimum burst pressure of 85 per cent of the minimum design burst pressure. For type CNG-4 designs, prior to the hydrostatic burst test the cylinder shall be leak tested in accordance with paragraph A.10. below.

A.8. Brinell hardness test

Hardness tests shall be carried out on the parallel wall at the centre and a domed end of each cylinder or liner in accordance with ISO 6506. The test shall be carried out after the final heat treatment and the hardness values thus determined shall be in the range specified for the design.

A.9. Coating tests (mandatory if paragraph 6.12.(c)) of Annex 3A is used)

A.9.1. Coating performance tests

Coatings shall be evaluated using the following test methods, or using equivalent national standards.

(a) Adhesion testing in accordance with ISO 4624 using Method A or B as applicable. The coating shall exhibit an adhesion rating of either 4A or 4B, as applicable;

(b) Flexibility in accordance with ASTM D522 Mandrel Bend Test of Attached Organic Coatings, using Test Method B with a 12.7 mm (0.5 inch) mandrel at the specified thickness at -20 °C. Samples for the flexibility test shall be prepared in accordance with the ASTM D522 standard. There shall not be any visually apparent cracks;

(c) Impact resistance in accordance with ASTM D2794 Test method for Resistance of Organic Coatings to the Effects of Rapid Deformation (Impact). The coating at room temperature shall pass a forward impact test of 18 J (160 in-lbs);

(d) Chemical resistance when tested in general accordance with ASTM D1308 Effect of Household Chemicals on Clear and Pigmented Organic Finishes. The tests shall be conducted using the Open Spot Test Method and 100 hour exposure to a 30 per cent sulfuric acid solution (battery acid with a specific gravity of 1.219) and 24 hours exposure to a polyalkalene glycol (e.g. brake fluid). There shall be no evidence of lifting, blistering or softening of the coating. The adhesion shall meet a rating of 3 when tested in accordance with ASTM D3359;

(e) Minimum 1,000 hours exposure in accordance with ASTM G53 Practice for Operating Light- and Water-Exposure Apparatus (Fluorescent W-Condensation Type) for Exposure of non-metallic Materials. There shall be no evidence of blistering, and adhesion shall meet a rating of 3 when tested in accordance with ISO 4624. The maximum gloss loss allowed is 20 per cent;

(f) Minimum 500 hours exposure in accordance with ASTM B117 Test Method of Salt Spray (Fog) Testing. Undercutting shall not exceed 3 mm at the scribe mark, there shall be no evidence of blistering, and adhesion shall meet a rating of 3 when tested in accordance with ASTM D3359;

(g) Resistance to chipping at room temperature using the ASTM D3170 Chipping Resistance of Coatings. The coating shall have a rating of 7A or better and there shall not be any exposure of the substrate.

A.9.2. Coating batch tests

(a) Coating thickness

The thickness of the coating shall meet the requirements of the design when tested in accordance with ISO 2808;

(b) Coating adhesion

The coating adhesion strength shall be measured in accordance with ISO 4624, and shall have a minimum rating of 4 when measured using either Test Method A or B, as appropriate.

A.10. Leak test

Type CNG-4 designs shall be leak tested using the following procedure (or an acceptable alternative);

(a) Cylinders shall be thoroughly dried and pressurized to working pressure with dry air or nitrogen, and containing a detectable gas such as helium;

(b) Any leakage measured at any point that exceeds 0.004 standard cm^3/h shall be cause for rejection.

A.11. Hydraulic test

One of the following two options shall be used:

Option 1: Water jacket test

(a) The cylinder shall be hydrostatically tested to at least 1.5 times working pressure. In no case may the test pressure exceed the auto-frettage pressure;

(b) Pressure shall be maintained for a sufficiently long period (at least 30 seconds) to ensure complete expansion. Any internal pressure applied after auto-frettage and previous to the hydrostatic test shall not exceed 90 per cent of the hydrostatic test pressure. If the test pressure cannot be maintained due to failure of the test apparatus, it is permissible to repeat the test at a pressure increased by 700 kPa. Not more than 2 such repeat rests are permitted;

(c) The manufacturer shall define the appropriate limit of permanent volumetric expansion for the test pressure used, but in no case shall the permanent expansion exceed 5 per cent of the total volumetric expansion measured under the test pressure. For type CNG-4 designs, the elastic expansion shall be established by the manufacturer. Any cylinders not meeting the defined rejection limit shall be rejected and either destroyed or used for batch test purposes.

Option 2: Proof pressure test

The hydrostatic pressure in the cylinder shall be increased gradually and regularly until the test pressure, at least 1.5 times the working pressure, is reached. The cylinder test pressure shall be held for a sufficiently long period (at least 30 seconds) to ascertain that there is no tendency for the pressure to decrease and that tightness is guaranteed.

A.12. Hydrostatic pressure burst test

(a) The rate of pressurisation shall not exceed 1.4 MPa per second (200 psi/second) at pressures in excess of 80 per cent of the design burst pressure. If the rate of pressurisation at pressures in excess of 80 per cent of the design burst pressure exceeds 350 kPa/second (50 psi/second), then either the cylinder shall be placed schematically between the pressure source and the pressure measurement device, or there shall be a 5 second hold at the minimum design burst pressure;

(b) The minimum required (calculated) burst pressure shall be at least 45 MPa, and in no case less than the value necessary to meet the stress ratio requirements. Actual burst pressure shall be recorded. Rupture may occur in either the cylindrical region or the dome region of the cylinder.

A.13. Ambient temperature pressure cycling

Pressure cycling shall be performed in accordance with the following procedure:

(a) Fill the cylinder to be tested with a non-corrosive fluid such as oil, inhibited water or glycol;

(b) Cycle the pressure in the cylinder between not more than 2 MPa and not less than 26 MPa at a rate not to exceed 10 cycles per minute.

The number of cycles to failure shall be reported, along with the location and description of the failure initiation.

A.14. Acid environment test

On a finished cylinder the following test procedure should be applied:

(a) Exposing a 150 mm diameter area on the cylinder surface for 100 hours to a 30 per cent sulfuric acid solution (battery acid with a specific gravity of 1.219) while the cylinder is held at 26 MPa;

(b) The cylinder shall then be burst in accordance with the procedure defined in paragraph A.12. above and provide a burst pressure that exceeds 85 per cent of the minimum design burst pressure.

A.15. Bonfire test

A.15.1. General

The bonfire tests are designed to demonstrate that finished cylinders complete with the fire protection system (cylinder valve, pressure relief devices and/or integral thermal insulation) specified in the design will not burst when tested under the specified fire conditions. Extreme caution shall be exercised during fire testing in the event that cylinder rupture occurs;

A.15.2. Cylinder set-up

Cylinders shall be placed horizontally with the cylinder bottom approximately 100 mm above the fire source;

Metallic shielding shall be used to prevent direct flame impingement on cylinder valves, fittings, and/or pressure relief devices. The metallic shielding shall not be in direct contact with the specified fire protection system (pressure relief devices or cylinder valve). Any failure during the test of a valve, fitting or tubing that is not part of the intended protection system for the design shall invalidate the result.

A.15.3. Fire source

A uniform fire source of 1.65 m length shall provide direct flame impingement on the cylinder surface across its entire diameter.

Any fuel may be used for the fire source provided it supplies uniform heat sufficient to maintain the specified test temperatures until the cylinder is vented. The selection of fuel should take into consideration air pollution concerns. The arrangement of the fire shall be recorded in sufficient detail to ensure the rate of heat input to the cylinder is reproducible. Any failure or inconsistency of the fire source during a test invalidates the result.

A.15.4. Temperature and pressure measurements

Surface temperatures shall be monitored by at least three thermocouples located along the bottom of the cylinder and spaced not more than 0.75 m apart. Metallic shielding shall be used to prevent direct flame impingement on the thermocouples. Alternatively, thermocouples may be inserted into blocks of metal measuring less than 25 square mm.

The pressure inside the cylinder shall be measured by a pressure sensor without modify the configuration of the system under test.

Thermocouple temperatures and the cylinder pressure shall be recorded at intervals of every 30 seconds or less during the test.

A.15.5. General test requirements

Cylinders shall be pressurized with natural gas and tested in the horizontal position at both:

(a) Working pressure;

(b) 25 per cent of the working pressure.

Immediately following ignition, the fire shall produce flame impingement on the surface of the cylinder along the 1.65 m length of the fire source and across the cylinder diameter. Within 5 minutes of ignition, at least one thermocouple shall indicate a temperature of at least 590 °C. This minimum temperature shall be maintained for the remaining duration of the test.

A.15.6. Cylinders 1.65 m length or less

The centre of the cylinder shall be positioned over the centre of the fire source;

A.15.7. Cylinders greater than 1.65 m length

If the cylinder is fitted with a pressure relief device at one end, the fire source shall commence at the opposite end of the cylinder. If the cylinder is fitted with pressure relief devices at both ends, or at more than one location along the length of the cylinder, the centre of the fire source shall be centred midway between the pressure relief devices that are separated by the greatest horizontal distance.

If the cylinder is additionally protected using thermal insulation, then two fire tests at service pressure shall be performed, one with the fire centred midway along the cylinder length, and the other with the fire commencing at one of the cylinder ends.

A.15.8. Acceptable results

The cylinder shall vent through a pressure relief device.

A.16. Penetration tests

A cylinder pressurised to 20 MPa ± 1 MPa with compressed gas shall be penetrated by an armour piercing bullet with a diameter of 7.62 mm or greater. The bullet shall completely penetrate at least one side wall of the cylinder. For type CNG-2, CNG-3 and CNG-4 designs, the projectile shall impact the side wall at an approximate angle of 45°. The cylinder shall reveal no evidence of fragmentation failure. Loss of small pieces of material, each not weighing more than 45 grams, shall not constitute failure of the test. The approximate size of entrance and exit openings and their locations shall be recorded.

A.17. Composite flaw tolerance tests

For type CNG-2, CNG-3 and CNG-4 designs only, one finished cylinder, complete with protective coating, shall have flaws in the longitudinal direction cut into the composite. The flaws shall be greater than the visual inspection limits as specified by the manufacturer.

The flawed cylinder shall then be pressure cycled from not more than 2 MPa to not less than 26 MPa for 3,000 cycles, followed by an additional 12,000 cycles at ambient temperature; The cylinder shall not leak or rupture within the first 3,000 cycles, but may fail by leakage during the last 12,000 cycles. All cylinders which complete this test shall be destroyed.

A.18. High temperature creep test

This test is required for all type CNG-4 designs, and all type CNG-2 and CNG-3 designs in which the glass transition temperature of the resin matrix does not exceed the maximum design material temperature given in paragraph 4.4.2. of Annex 3A by at least 20 °C. One finished cylinder shall be tested as follows:

(a) The cylinder shall be pressurised to 26 MPa and held at a temperature of 100 °C for not less than 200 hours;

(b) Following the test, the cylinder shall meet the requirements of the hydrostatic expansion test A.11., the leak test A.10., and the burst test A.12. above.

A.19. Accelerated stress rupture test

For type CNG-2, CNG-3, and CNG-4 designs only, one cylinder free of protective coating shall be hydrostatically pressurised to 26 MPa while immersed in water at 65 °C. The cylinder shall be held at this pressure and temperature for 1,000 hours. The cylinder shall then be pressured to burst in accordance with the procedure defined in paragraph A.12. above except that the burst pressure shall exceed 85 per cent of the minimum design burst pressure.

A.20. Impact damage test

One or more finished cylinders shall be drop tested at ambient temperature without internal pressurisation or attached valves. The surface onto which the cylinders are dropped shall be a smooth, horizontal concrete pad or flooring. One cylinder shall be dropped in a horizontal position with the bottom 1.8 m above the surface onto which it is dropped. One cylinder shall be dropped vertically on each end at a sufficient height above the floor or pad so that the potential energy is 488 J, but in no case shall the height of the lower end be greater than 1.8 m. One cylinder shall be dropped at a 45° angle onto a dome from a height such that the centre of gravity is at 1.8 m; however, if the lower end is closer to the ground than 0.6 m, the drop angle shall be changed to maintain a minimum height of 0.6 m and a centre of gravity of 1.8 m.

Following the drop impact, the cylinders shall be pressure cycled from not more than 2 MPa to not less than 26 MPa for 1,000 cycles times the specified service life in years. The cylinders may leak but not rupture, during the cycling. Any cylinders completing the cycling test shall be destroyed.

A.21. Permeation test

This test is only required on type CNG-4 designs. One finished cylinder shall be filled with compressed natural gas or a 90 per cent nitrogen/10 per cent helium mixture to working pressure, placed in an enclosed sealed chamber at ambient temperature, and monitored for leakage for a time sufficient to establish a steady state permeation rate. The permeation rate shall be less than 0.25 ml of natural gas or helium per hour per litre water capacity of the cylinder.

A.22. Tensile properties of plastics

The tensile yield strength and ultimate elongation of plastic liner material shall be determined at -50 °C using ISO 3628, and meet the requirements of paragraph 6.3.6. of Annex 3A.

A.23. Melting temperature of plastics

Polymeric materials from finished liners shall be tested in accordance with the method described in ISO 306, and meet the requirements of paragraph 6.3.6. of Annex 3A.

A.24. Pressure relief device requirements

Pressure relief device specified by the manufacturer shall be shown to be compatible with the service conditions listed in paragraph 4. of Annex 3A and through the following qualification tests:

(a) One specimen shall be held at a controlled temperature of not less than 95 °C and a pressure not less than test pressure (30 MPa) for 24 hours. At the end of this test there shall be no leakage or visible sign of extrusion of any fusible metal used in the design.

(b) One specimen shall be fatigue tested at a pressure cycling rate not to exceed 4 cycles per minute as follows:

(i) Held at 82 °C while pressured for 10,000 cycles between 2 MPa and 26 MPa;

(ii) Held at -40 °C while pressure for 10,000 cycles between 2 MPa and 20 MPa.

At the end of this test there shall be no leakage, or any visible sign of extrusion of any fusible metal used in the design.

(c) Exposed brass pressure retaining components of pressure relief devices shall withstand, without stress corrosion cracking, a mercurous nitrate test as described in ASTM B154. The pressure relief device shall be immersed for 30 minutes in an aqueous mercurous nitrate solution containing 10 g of mercurous nitrate and 10 ml of nitric acid per litre of solution. Following the immersion, the pressure relief device shall be leak tested by applying an aerostatic pressure of 26 MPa for one minute during which time the component shall be checked for external leakage; Any leakage shall not exceed 200 cm^3/h;

(d) Exposed stainless steel pressure retaining components of pressure relief devices shall be made of an alloy type resistant to chloride induced stress corrosion cracking.

A.25. Boss torque test

The body of the cylinder shall be restrained against rotation and a torque of 500 Nm shall be applied to each end boss of the cylinder, first in the direction to tighten a threaded connection, then in the untightening direction, and finally again in the tightening direction.

A.26. Resin shear strength

Resin materials shall be tested on a sample coupon representative of the composite over-wrap in accordance with ASTM D2344, or an equivalent national standard. Following a 24-hour water boil the composite shall have a minimum shear strength of 13.8 MPa.

A.27. Natural gas cycling test

One finished cylinder shall be pressure cycled using compressed natural gas from less than 2 MPa to working pressure for 300 cycles. Each cycle, consisting of the filling and venting of the cylinder, shall not exceed 1 hour. The cylinder shall be leak tested in accordance with paragraph A.10. above and meet the requirements therein. Following the completion of the natural gas cycling the cylinder shall be sectioned and the liner/end boss interface inspected for evidence of any deterioration, such as fatigue cracking or electrostatic discharge.

Note - Special consideration shall be given to safety when conducting this test. Prior to conducting this test, cylinders of this design shall have successfully passed the test requirements of paragraph A.12. above (hydrostatic pressure burst test), paragraph 8.6.3. of Annex 3A (ambient temperature pressure cycling test) and paragraph A.21. above (permeation test). Prior to conducting this test, the specific cylinders to be tested shall pass the test requirements of paragraph A.10. above (leak test).

A.28. Bend test, welded stainless steel liners

Bend tests shall be carried out on material taken from the cylindrical part of a welded stainless steel liner and tested in accordance with the method described in paragraph 8.5. of EN 13322-2. The test piece shall not crack when bent inwards around a former until the inside edges are not further apart than the diameter of the former.

Annex 3A - Appendix B

(Not allocated)

Annex 3A - Appendix C

(Not allocated)

Annex 3A - Appendix D

Report forms

Note - This appendix is not a mandatory part of this annex.

The following forms should be used:

(1) Report of Manufacture and Certificate of Conformity - Required to be clear, legible and in the format of Form 1.

(2) Report[1] of Chemical Analysis of Material for Metallic Cylinders, Liners, or Bosses - Required essential elements, identification, etc.

(3) Report[1] of Mechanical Properties of Material for Metallic Cylinders and Liners - Required to report all tests required by this Regulation.

(4) Report[1] of Physical and Mechanical Properties of Materials for Non-Metallic Liners - Required to report all tests and information required in this Regulation.

(5) Report[1] of Composite Analysis - Required to report all tests and data required in this Regulation.

(6) Report of Hydrostatic Tests, Periodic Pressure Cycling and Burst Tests - Required to report test and data required in this Regulation.

Form 1: Report of Manufacturer and Certificate of Conformity

Manufactured by:

Located at:

Regulatory Registration Number:

Manufacturers Mark and Number:

Serial Number: from …… to …… inclusive ……

Cylinder description:

SIZE: Outside diameter: ……mm; Length: ……mm;

Marks stamped on shoulder or on labels of the cylinder are:

(a) "CNG only": .....

(b) "DO NOT USE AFTER":.....

(c) "Manufacturer's mark": .....

(d) Serial and part number: .....

(e) Working pressure in MPa:.....

(f) Regulation: .....

(g) Fire protection type: .....

[1] Report Forms 2 through 6 shall be developed by the manufacturer and shall fully identify cylinders and requirements. Each report shall be signed by the Type Approval Authority and the manufacturer.

(h) Date of original test (month and year):.....

(i) Tare mass of empty cylinder (in kg):.....

(j) Authorized body or inspectors mark: .....

(k) Water capacity in L: .....

(l) Test pressure in MPa: .....

(m) Any special instructions: .....

Each cylinder was made in compliance with all requirements of Regulation No. ..... in accordance with the cylinder description above. Required reports of test results are attached.

I hereby certify that all these test results proved satisfactory in every way and are in compliance with the requirements for the type listed above.

Comments:.....

Type Approval Authority: .....

Inspector's signature: .....

Manufacturer's signature:.....

Place, date:.....

Annex 3A - Appendix E

Verification of stress ratios using strain gauges

1. The stress-strain relationship for fibres is always elastic, therefore, stress ratios and strain ratios are equal.

2. High elongation strain gauges are required.

3. Strain gauges should be orientated in the direction of the fibres on which they are mounted (i.e. with hoop fibre on the outside of the cylinder, mount gauges in the hoop direction).

4. Method 1 (applies to cylinders that do not use high tension winding)

   (a) Prior to auto-frettage, apply strain gauges and calibrate;

   (b) Measure strains at auto-frettage, zero after auto-frettage, working, and minimum burst pressure have been met;

   (c) Confirm that the strain at burst pressure divided by strain at working pressure meets the stress ratio requirements. For hybrid construction, the strain at working pressure is compared with the rupture strain of cylinders reinforced with a single fibre type.

5. Method 2 (applies to all cylinders)

   (a) At zero pressure after winding and auto-frettage, apply strain gauges and calibrate;

   (b) Measure strains at zero, working, and minimum burst pressure;

   (c) At zero pressure, after strain measurements have been taken at the working and minimum burst pressures, and with strain gauges monitored, cut the cylinder section apart so that the region containing the strain gauge is approximately five inches long. Remove the liner without damaging the composite. Measure the strains after the liner is removed.

   (d) Adjust the strain readings at zero, working, and minimum burst pressures by the amount of strain measured at zero pressure with and without the liner.

   (e) Confirm that the strain at burst pressure divided by strain at working pressure meets the stress ratio requirements. For hybrid construction, the strain at working pressure is compared with the rupture strain of cylinders reinforced with a single fibre type.

Annex 3A - Appendix F

Fracture performance methods

F.1. Determination of fatigue sensitive sites

The location and orientation of fatigue failure in cylinders shall be determined by appropriate stress analysis or by full scale fatigue tests on finished cylinders as required under the design qualification tests for each type of design. If finite element stress analysis is used, the fatigue sensitive site shall be identified based on the location and orientation of the highest tensile principal stress concentration in the cylinder wall or liner at the working pressure.

F.2. Leak-Before-Break (LBB)

F.2.1. Engineering critical assessment. This analysis may be carried out to establish that the finished cylinder will leak in the event of a defect in the cylinder or liner growing into a through-wall crack. A leak-before-break assessment shall be performed at the cylinder side wall. If the fatigue sensitive location is outside the side wall, a leak-before-break assessment shall also be performed at that location using a Level II approach as outlined in BS PD6493. The assessment shall include the following steps:

(a) Measure the maximum length (i.e. major axis) of the resultant through-wall surface crack (usually elliptical in shape) from the three cylinder cycle tested under the design qualification tests (according to paragraphs A.13. and A.14. of Appendix A to this annex) for each type of design. Use the longest crack length of the three cylinders in the analysis. Model a semi-elliptical through-wall crack with a major axis equal to twice the measured longest major axis and with a minor axis equal to 0.9 of wall thickness. The semi-elliptical crack shall be modelled at the locations specified in paragraph F.1. above. The crack shall be oriented such that the highest tensile principal stress shall drive the crack;

(b) Stress levels in the wall/liner at 26 MPa obtained from the stress analysis as outlined in paragraph 6.6. of Annex 3A shall be used for the assessment. Appropriate crack driving forces shall be calculated using either Section 9.2 or 9.3. of BS PD6493;

(c) Fracture toughness of the finished cylinder or the liner from a finished cylinder, as determined at room temperature for aluminium and at -40 °C for steel, shall be established using a standardized testing technique (either ISO/DIS 12737 or ASTM 813-89 or BS 7448) in accordance with Sections 8.4 and 8.5 of BS PD6493;

(d) Plastic collapse ratio shall be calculated in accordance with Section 9.4. of BS PD6493-91;

(e) The modelled flaw shall be acceptable in accordance with Section 11.2. of BS PD6493-91.

F.2.2. LBB by flawed cylinder burst

A fracture test shall be performed by the cylinder side wall. If the fatigue sensitive locations as determined in paragraph F.1. above is outside the side wall, the fracture test shall also be performed at that location. The test procedure is as follows:

(a) Determination of leak-before-break flaw length

The length of the LBB flaw at the fatigue sensitive site shall be twice the length of the maximum length measured of the resultant through-wall surface crack from the three cylinders cycle tested to failure under the design qualification tests for each type of design;

(b) Cylinder flaws

For type CNG-1 designs having fatigue sensitive site in the cylindrical part in the axial direction, external flaws shall be machined longitudinally, approximately at mid-length of the cylindrical part of the cylinder. The flaws shall be located at minimum wall thickness of the midsection based on thickness measurements at four points around the cylinder. For type CNG-1 designs having fatigue sensitive site outside the cylindrical part, the LBB flaw shall be introduced at the internal surface of the cylinder along the fatigue sensitive orientation. For type CNG-2 and CNG-3 designs the LBB flaw shall be introduced in the metal liner;

For flaws to be tested by monotonic pressure, the flaw cutter shall be approximately 12.5 mm thick with an angle of 45 °C and a tip radius of 0.25 mm maximum. The cutter diameter shall be 50 mm for cylinder with outside diameter less than 140 mm, and 65 to 80 mm for cylinders with outside diameter greater than 140 mm (a standard CVN cutter is recommended).

Note - The cutter should be sharpened regularly to assure tip radius meets specification.

The depth of the flaw may be adjusted to obtain a leak by monotonic hydro-pressurization. The crack shall not propagate by more than 10 per cent outside of the machined flaw measured on the external surface;

(c) Test procedure

The test shall be performed by monotonic pressurisation or cyclic pressurisation as described below:

(i) Monotonic pressurisation to burst

The cylinder shall be pressurised hydrostatically until pressure is released from the cylinder at the flaw location. The pressurisation shall be performed as described in paragraph A.12. (Appendix A to this annex);

(ii) Cyclic pressure

The test procedure shall be in accordance with the requirements of paragraph A.13. of Appendix A to this annex.

(d) Acceptance criteria for the flawed cylinder test

The cylinder passes the tests if the following conditions are met:

(i) For monotonic pressurisation burst test, the failed pressure shall be equal or greater than 26 MPa.

For monotonic pressurised burst test, a total crack length measured on the external surface of 1.1 times the original machined length is allowed.

(ii) For cycle tested cylinders, fatigue crack growth beyond the original machined flaw length is allowed. However, the failure mode shall be a "leak". Propagation of the flaw by fatigue should occur over at least 90 per cent of the length of the original machined flaw.

Note - If these requirements are not fulfilled (failure occurs below 26 MPa, even and if the failure is a leak), a new test can be performed with a less deep flaw. Also, if rupture type failure occurs at a pressure greater than 26 MPa and flaw depth is shallow, a new test can be performed with a deeper flaw.

F.3. Defect size for non-destructive examination (NDE)

F.3.1. NDE Defect size by engineering critical assessment

Calculations shall be performed in accordance with British Standard (BS) PD 6493, Section 3., using the following steps:

(a) Fatigue cracks shall be modelled at the high stress location in the wall/liner as planar flaws;

(b) The applied stress range at the fatigue sensitive site, due to a pressure between 2 MPa and 20 MPa, shall be established from the stress analysis as outlined in paragraph F.1. of this appendix;

(c) The bending and membrane stress component may be used separately;

(d) The minimum number of pressure cycles is 15,000;

(e) The fatigue crack propagation data shall be determined in air in accordance with ASTM E647. The crack plane orientation shall be in the C-L direction (i.e., crack plane perpendicular to the circumferences and along the axis of the cylinder), as illustrated in ASTM E399. The rate shall be determined as an average of 3 specimen tests. Where specific fatigue crack propagation data are available for the material and service condition, they may be used in the assessment.

(f) The amount of crack growth in the thickness direction and in the length direction per pressures cycle shall be determined in accordance with the steps outlined in Section 14.2. of the BS PD 6493-91 standard by integrating the relationship between the rate of fatigue crack propagation, as established in e) above, and the range of crack driving force corresponding to the applied pressure cycle;

(g) Using the above steps, calculate the maximum allowable defect depth and length which shall not cause the failure of the cylinder during the design life due to either fatigue or rupture. The defect size for NDE shall be equal to or less than the calculated maximum allowable defect size for the design.

F.3.2. NDE Defect size by flawed cylinder cycling

For type CNG-1, CNG-2 and CNG-3 designs, three cylinders containing artificial defects that exceed the defect length and depth detection capability of the NDE inspection method required in paragraph 6.15. of Annex 3A, shall be pressure cycled to failure in accordance with the test method in paragraph A.13. (Appendix A to this annex). For type CNG-1 designs having a fatigue sensitive site in the cylindrical part, external flaws shall be introduced on the side wall. For type CNG-1 designs having the fatigue sensitive site outside the side wall, and for type CNG-2 and CNG-3 designs, internal flaws shall be introduced. Internal flaws may be machined prior to the heat treating and closing of the end of the cylinder.

The cylinders shall not leak or rupture in less than 15,000 cycles. The allowable defect size for NDE shall be equal to or less than the artificial flaw size at that location.

Annex 3A - Appendix G

Instructions by the container manufacturer on handling, use and inspection of cylinders

G.1. General

The primary function of this appendix is to provide guidance to the cylinder purchaser, distributor, installer and user for the safe use of the cylinder over its intended service life.

G.2. Distribution

The manufacturer shall advise the purchaser that the instructions shall be supplied to all parties involved in the distribution, handling, installation and use of the cylinders; The document may be reproduced to provide sufficient copies for this purpose, however it shall be marked to provide reference to the cylinders being delivered;

G.3. Reference to existing codes, standards and regulations

Specific instructions may be stated by reference to national or recognized codes, standards and regulations.

G.4. Cylinder handling

Handling procedures shall be provided to ensure that the cylinders will not suffer unacceptable damage or contamination during handling.

G.5. Installation

Installation instructions shall be provided to ensure that the cylinders will not suffer unacceptable damage during installation and during normal operation over the intended service life.

Where the mounting is specified by the manufacturer, the instructions shall contain where relevant, details such as mounting design, the use of resilient gasket materials, the correct tightening torques and avoidance of direct exposure of the cylinder to an environment of chemical and mechanical contacts.

Where the mounting is not specified by the manufacturer, the manufacturer shall draw the purchaser's attention to possible long term impacts of the vehicle mounting system, for example: vehicle body movements and cylinder expansion/contraction in the pressure and temperature conditions of service.

Where applicable, the purchaser's attention shall be drawn to the need to provide installations such that liquids or solids cannot be collected to cause cylinder material damage;

The correct pressure relieve device to be fitted shall be specified.

G.6. Use of cylinders

The manufacturer shall draw the purchaser's attention to the intended service conditions specified by this Regulation, in particular the cylinder's allowable number of pressure cycles, its life in years, the gas quality limits and the allowable maximum pressures.

G.7. In-service inspection

The manufacturer shall clearly specify the user's obligation to observe the required cylinder inspection requirements (e.g. reinspection interval, by authorized personnel). This information shall be in agreement with the design approval requirements.

Annex 3A - Appendix H

Environmental test

H.1. Scope

The environmental test is intended to demonstrate that NGV cylinders can withstand exposure to the automotive underbody environment and occasional exposure to other fluids. This test was developed by the United States of America (USA) automotive industry in response to cylinder failures initiated by stress corrosion cracking of the composite wrap.

H.2. Summary of test method

A cylinder is first preconditioned by a combination of pendulum and gravel impacts to simulate potential underbody conditions. The cylinder is then subjected to a sequence of immersion in simulated road salt/acid rain, exposure to other fluids, pressure cycles and high and low temperature exposures. At the conclusion of the test sequence the cylinder will be hydraulically pressured to destruction. The remaining residual burst strength of the cylinder shall be not less than 85 per cent of the minimum design burst strength.

H.3. Cylinder set-up and preparation

The cylinder shall be tested in a condition representative of installed geometry including coating (if applicable), brackets and gaskets, and pressure fittings using the same sealing configuration (i.e. O-rings) as that used in service. Brackets may be painted or coated prior to installation in the immersion test if they are painted or coated prior to vehicle installation.

Cylinders will be tested horizontally and nominally divided along their horizontal centreline into "upper" and "lower" sections. The lower section of the cylinder will be alternatively immersed in road salt/acid rain environment and in heated or cooled air.

The upper section will be divided into 5 distinct areas and marked for preconditioning and fluid exposure. The areas will be nominally 100 mm in diameter. The areas shall not overlap on the cylinder surface. While convenient for testing, the areas need not be oriented along a single line, but shall not overlap the immersed section of the cylinder.

Although preconditioning and fluid exposure is performed on the cylindrical section of the cylinder, all of the cylinder, including the domed sections, should be as resistant to the exposure environments as are the exposed areas.

Figure H.1
Cylinder orientation and layout of exposure areas

Other fluid

Exposure areas

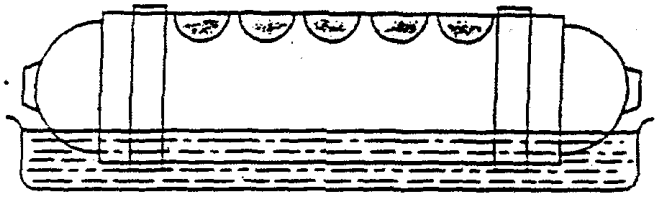

Immersion area

(Lower third)

H.4. Preconditioning apparatus

The following apparatus are needed for preconditioning the test cylinder by pendulum and gravel impact.

(a) Pendulum impact

The impact body shall be of steel and have the shape of a pyramid with equilateral triangle faces and a square base, the summit and the edges being rounded to a radius of 3 mm. The centre of percussion of the pendulum shall coincide with the centre of gravity of the pyramid; its distance from the axis of rotation of the pendulum shall be 1 m. The total mass of the pendulum referred to its centre of percussion shall be 15 kg. The energy of the pendulum at the moment of impact shall be not less than 30 Nm and as close to that value as possible.

During pendulum impact, the cylinder shall be held in position by the end bosses or by the intended mounting brackets.

(b) Gravel impact

Machine constructed according to the design specifications shown in Figure H.2. This procedure for operation of the equipment shall follow that described in ASTM D3170, Standard Test Method for Chip Resistance of Coatings with the exception that the cylinder may be at ambient temperature during gravel impact;

(c) Gravel

Alluvial road gravel passing through a 16 mm space screen but retained on a 9.5 mm space screen. Each application is to consist of 550 ml of graded gravel (approximately 250 to 300 stones).

Figure H.2
Gravel impact test

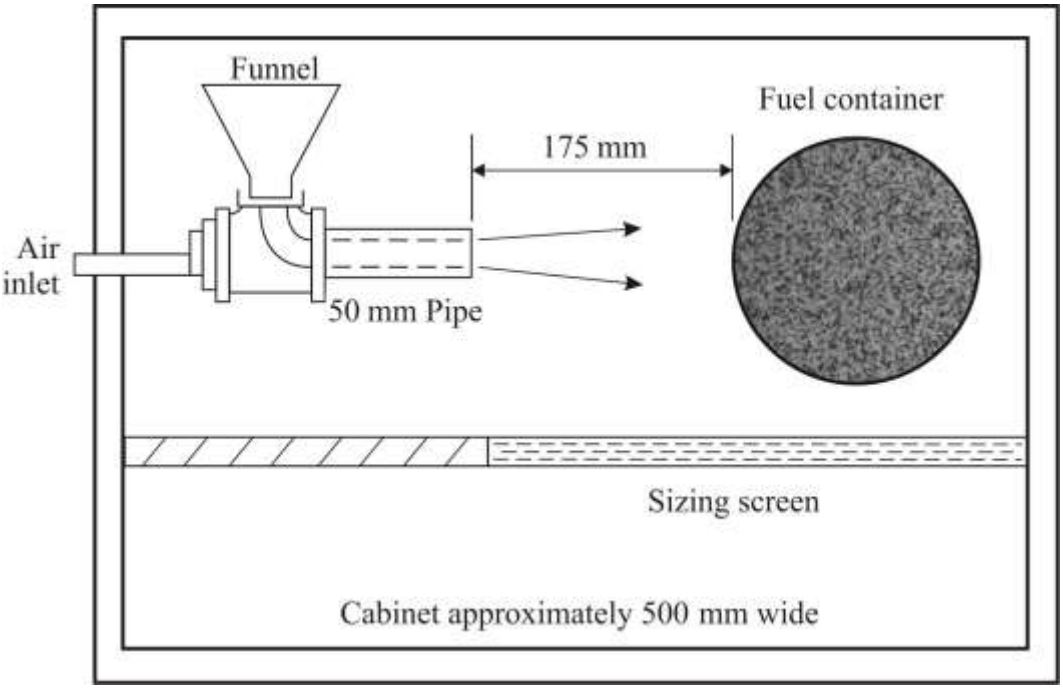

H.5. Exposure environments

(a) Immersion environment

At the specified stage in the test sequence (Table 1) the cylinder will be oriented horizontally with the lower third of the cylinder diameter immersed in a simulated acid rain/road salt water solution. The solution will consist of the following compounds:

Deionized water;

Sodium chloride: 2.5 per cent by weight ± 0.1 per cent;

Calcium chloride: 2.5 per cent by weight ± 0.1 per cent;

Sulphuric acid: Sufficient to achieve a solution pH of 4.0 ± 0.2;

Solution level and pH are to be adjusted prior to each test step which uses this liquid.

The temperature of the bath shall be 21 ± 5 °C. During immersion, the unsubmerged section of the cylinder shall be in ambient air.

(b) Other fluid exposure

At the appropriate stage in test sequence (Table 1) each marked area is to be exposed to one of five solutions for 30 minutes. The same environment shall be used for each location throughout the test. The solutions are:

Sulphuric acid: 19 per cent solution by volume in water;

Sodium hydroxide:	25 per cent solution by weight in water;
Methanol/gasoline:	30/70 per cent concentrations;
Ammonium nitrate:	28 per cent by weight in water;

Windshield washer fluid

When exposed, the test sample will be oriented with the exposure area uppermost. A pad of glass wool one layer thick (approximately 0.5 mm) and trimmed to the appropriate dimensions is to be placed on the exposure area. Using a pipet, apply 5 ml of the test fluid to the exposure area. Remove the gauze pad after pressurization of the cylinder for 30 minutes.

H.6. Test conditions

(a) Pressure cycle

As defined in the test sequence, cylinder shall be hydraulically pressure cycled between not less than 2 MPa and not more than 26 MPa. The total cycle shall be not less than 66 seconds and will include a 60 second minimum hold at 26 MPa. The nominal cycle process will be:

Ramp up from ≤ 20 MPa to ≥ 26 MPa;

Hold at ≥ 26 MPa for 60 seconds minimum;

Ramp down from ≥ 26 MPa to ≤ 2 MPa;

Total minimum cycle time to be 66 seconds.

(b) Pressure during other fluid exposure

Following application of the other fluids, the cylinder shall be pressured to not less than 26 MPa for a minimum of 30 minutes;

(c) High and low temperature exposure

As defined in the test sequence, the entire cylinder shall be exposed to high or low temperature air in contact with external surface. The low temperature air shall be -40 °C or lower and the high temperature air shall be 82 °C ± 5 °C. For the low temperature exposure, the fluid temperature of type CNG-1 cylinders shall be monitored using a thermocouple installed within the cylinder to ensure it remains at -40 °C or lower.

H.7. Test procedure

(a) Preconditioning of the cylinder

Each of the five areas marked for other fluid exposure on the upper section of the cylinder shall be preconditioned by a single impact of the pendulum body summit at their geometric centre. Following impact, the five areas shall be further conditioned by a gravel impact application.

The central section of the bottom portion of the cylinder that will be submerged shall be preconditioned by an impact of the pendulum body summit at three locations spaced approximately 150 mm apart.

Following impact, the same central section that was impacted shall be further conditioned by a gravel impact application.

The cylinder shall be unpressured during preconditioning.

(b) Test sequence and cycles

The sequence of the environment exposure, pressure cycles, and temperature to be used are defined in Table 1.

The cylinder surface is not to be washed or wiped between stages.

H.8. Acceptable results

Following the above test sequence, the cylinder shall be hydraulically tested to destruction in accordance with the procedure in paragraph A.12. of Appendix A to this annex. The burst pressure of the cylinder shall be not less than 85 per cent of the minimum design burst pressure.

Table 1
Test conditions and sequence

Test steps	*Exposure environments*	*Number of pressure cycles*	*Temperature*
1	Other fluids	-	Ambient
2	Immersion	1,875	Ambient
3	Air	1,875	High
4	Other fluids	-	Ambient
5	Immersion	1,875	Ambient
6	Air	3,750	Low
7	Other fluids	-	Ambient
8	Immersion	1,875	Ambient
9	Air	1,875	High
10	Other fluids	-	Ambient
11	Immersion	1,875	Ambient

Annex 3B

Liquid tanks - Vacuum insulated vessels for the on-board storage of natural gas as a fuel for automotive vehicles

1. Scope

This annex sets out minimum requirements for refillable liquid tanks. The tanks are intended only for the on-board storage of liquid natural gas as a fuel for automotive vehicles to which the tanks are to be fixed. Tanks shall be of any austenitic stainless steel material, design or method of manufacture suitable for the specified service conditions.

Tanks for LNG covered by this annex are classified in Class 5.

Service conditions to which the tanks will be subjected are detailed in paragraph 4. below.

This annex is based upon a working pressure less than 26 MPa. Working Pressures (WP) can be accommodated by adjusting the test pressure by the appropriate factor (ratio) using the following formula:

$P_{test} = 1.3\ (WP + 0.1)$ [MPa]

The service life of the tanks shall be defined by the manufacturer and may vary with applications.

2. Service conditions

2.1 General

2.1.1. Standard service conditions

The standard service conditions specified in this section are provided as a basis for the design, manufacture, inspection, testing, and approval of tanks that are to be mounted permanently on vehicles and used to store natural gas at cryogenic temperatures for use as a fuel on vehicles.

2.1.2. Use of tanks

The service conditions specified are also intended to provide information on how tanks made to this Regulation may safely be used to:

(a) Manufacturers of tanks;

(b) Owners of tanks;

(c) Designers or contractors responsible for the installation of tanks;

(d) Designers or owners of equipment used to refuel vehicle tanks;

(e) Suppliers of natural gas; and

(f) Regulatory authorities who have jurisdiction over tank use.

2.1.3. Periodic requalification

Recommendations for periodic requalification by visual inspection or testing during the service life shall be provided by the tank manufacturer on the basis of use under service conditions specified herein. Each tank shall be visually inspected at least every 120 months after the date of its entry into service on

the vehicle (vehicle registration), and at the time of any reinstallation, for external damage and deterioration, including under the support straps. The visual inspection shall be performed by a Technical Service designated or recognized by the Type Approval Authority, in accordance with the manufacturer's specifications: tanks without label containing mandatory information, or with labels containing mandatory information that are illegible in any way shall be removed from service. If the tank can be positively identified by manufacturer and serial number, a replacement label may be applied, allowing the tank to remain in service.

2.1.4. Tanks involved in collisions

Tanks that have been involved in a vehicle collision shall be reinspected by an agency authorized by the manufacturer, unless otherwise directed by the Competent Authority having jurisdiction. Tanks that have not experienced any impact damage from the collision may be returned to service, otherwise the tank shall be returned to the manufacturer for evaluation.

2.1.5. Tanks involved in fires

Tanks that have been subject to the action of fire shall be reinspected by an agency authorized by the manufacturer, or condemned and removed from service.

2.2. Maximum pressure

The maximum allowable working pressure (MAWP) shall be defined by the manufacturer and correspond to the nominal primary relief valve setting. The maximum allowable working pressure shall be less than 26 MPa.

2.3. Temperature range

Temperature of liquid in tanks may vary from a minimum of -195 °C to a maximum of 65 °C.

2.4. Gas composition

Hydrogen shall be limited to 2 per cent by volume when tanks are manufactured from steel with an ultimate tensile strength exceeding 950 MPa.

2.5. External surfaces

Tanks are not designed for continuous exposure to mechanical or chemical attack, e.g. leakage from cargo that may be carried on vehicles or severe abrasion damage from road conditions, and shall comply with recognized installation standards. However, tank external surfaces may be inadvertently exposed to:

(a) Solvents, acids and alkalis, fertilizers; and

(b) Automotive fluids, including gasoline, hydraulic fluids, glycol and oils.

2.6. Leakage and venting

In the case of LNG tanks are located in enclosed spaces for extended periods of time (e.g. for service), leakage and venting of natural gas (or other flammable substances) from the tank shall be dealt with properly to avoid the dangers due to releasing flammable substances in enclosed spaces.

2.7. Vehicle LNG tank(s) shall have a design hold time (build without relieving) minimum of 5 days after being filled net full and at the highest point in the design filling temperature/pressure range.

3. Design approval

3.1. General

The following information shall be submitted by the tank designer or manufacturer with a request for approval to the Type Approval Authority:

(a) Statement of service (paragraph 3.2.);

(b) Design data (paragraph 3.3.);

(c) Manufacturing data (paragraph 3.3.7.);

(d) Specification sheet (paragraph 3.3.8.);

(e) Additional supporting data (paragraph 3.3.9.1.).

3.2. Statement of service

The purpose of this statement of service is to guide users and installers of tanks as well as to inform the Type Approval Authority, or their designated representative. The statement of service shall include:

(a) A statement that the tank design is suitable for use in the service conditions defined in paragraph 4. for the service life of the tank;

(b) The service life;

(c) The minimum in-service test and/or inspection requirements;

(d) The pressure relief devices required;

(e) Support methods, etc., required but not provided;

(f) A description of the tank design;

(g) Design hold time;

(h) Any other information necessary to ensure the safe use and inspection of the tank.

3.3. Design data

3.3.1. Drawings

Drawings shall show the following as a minimum:

(a) Title, reference number, date of issue, and revision numbers with dates of issue if applicable;

(b) Reference to this Regulation and the tank type;

(c) All pressure vessel dimensions complete with tolerances, including details of end closure shapes with minimum thicknesses and of openings;

(d) Mass, complete with tolerances, of tanks;

(e) Material specifications complete with minimum mechanical and chemical properties or tolerance ranges;

(f) Other data such as minimum test pressure.

3.3.2. Stress analysis report

A stress analysis shall be provided;

Acceptable calculation methods include:

(a) Finite element;

(b) Finite difference;

(c) Boundary element;

(d) Other established method.

A table summarizing the calculated stresses in the report shall be provided.

3.3.3. Material data

A detailed description of the materials and tolerances of the materials properties used in the design shall be provided.

3.3.4. Design qualification test data

The tank material, design, manufacture and examination shall be provided to be adequate for their intended service by meeting the requirements of the tests required for the particular tank design, when tested in accordance with the relevant methods of test detailed in Appendix A to this annex.

The test data also shall document the dimensions, wall thicknesses and weights of each of the test tanks.

3.3.5. Fire protection

The arrangement of pressure relief devices that will protect the tank from sudden rupture when exposed to the fire conditions in paragraph A.1. of Appendix A to this annex shall be specified. Test data shall substantiate the effectiveness of the specified fire protection system.

3.3.6. Tank supports

Details of tank supports or support requirements shall be provided in accordance with paragraph 4.11.

3.3.7. Manufacturing data

Descriptions of fabrication processes and production tests shall be provided.

The following shall be in accordance with EN 1251-2 (2000):

(a) Quality system;

(b) Cutting;

(c) Cold forming;

(d) Hot forming;

(e) Manufacturing tolerances;

(f) Welding;

(g) Non-welded joints.

3.3.8. Specification sheet

A summary of the documents providing the information required in paragraph 5.1. shall be listed on a specification sheet for each tank design. The title, reference number, revision numbers and dates of original issue and version issues of each document shall be given. All documents shall be signed or initialled by the issuer. The specification sheet shall be given a number, and revision numbers if applicable, that can be used to designate the tank design and shall carry the signature of the engineer responsible for the design. Space shall be provided on the specification sheet for a stamp indicating registration of the design.

3.3.9.1. Additional supporting data

Additional data that would support the application, such as the service history of material proposed for use, or the use of a particular tank design in other service conditions, shall be provided where applicable.

3.4. Approval and certification

3.4.1. Inspection and testing

Evaluation of conformity is required to be performed in accordance with the provisions of paragraph 11. of this Regulation;

In order to ensure that the tanks are in compliance with this Regulation, they shall be subject to inspection in accordance with paragraph 4.10. performed by the Authority.

3.4.2. Test certificate

If the results of prototype testing according to paragraph 4.10. are satisfactory, the competent Authority shall issue a test certificate. An example of a test certificate is given in Appendix D to this annex.

4. Requirements

4.1. General

The design of tanks shall cover all relevant aspects that are necessary to ensure that every tank produced according to the design is fit for its purpose for the specified service life.

4.2. Design

This Regulation does not provide design formulas, but requires the adequacy of the design to be established by appropriate calculations and demonstrated by tanks being capable of consistently passing the materials, design qualification and production tests specified in this Regulation.

4.3. Materials

Materials used shall be suitable for the service conditions specified in paragraph 2. The design shall not have incompatible materials in contact. The design qualification tests for materials are summarized in Table 6.1.

The materials of the fuel tank and its accessories shall be compatible, as applicable, with:

(a) LNG;

(b) Other media and fluids found in a vehicle environment such as coolants, brake fluid and battery acid.

Materials used at low temperatures shall meet the toughness requirements of ISO 21028-1 (2004). For non-metallic materials, low temperature suitability shall be validated by an experimental method, taking into account the service conditions.

The materials used for the outer jacket shall ensure the integrity of the insulation system and shall be made of austenitic stainless steel and their elongation at fracture, at the temperature of liquid nitrogen, shall be at least 12 per cent.

For the inner vessel, it shall be ensured that the materials will resist all the in service fatigue loads.

A corrosion allowance does not need to be added for the inner vessel. A corrosion allowance does not need to be added on other surfaces, if they are protected against corrosion.

For welded vessels, welds shall have properties equivalent to those specified for the parent material for all temperatures that the material may encounter.

4.3.1. Composition

The chemical composition of all steels shall be declared and defined at least by carbon, manganese, silicon, nickel, chromium, and molybdenum contents, and any other alloying elements intentionally added.

4.3.2. Tensile test

The tensile properties of welded steel in the inner vessel shall be tested in accordance with EN 895:1995 and EN 6892-1:2009.

4.3.3. Impact test

The impact properties of welded steel in the inner vessel shall be tested in accordance with EN 1251-2:2000 and EN 10045-1:1990.

4.3.4. Bending test

The bending properties of welded steel in the inner vessel shall be tested in accordance with EN 910:1996.

4.3.5. Weld examination

Radiographic inspection of welded steel in the inner vessel shall be performed in accordance with EN 1251-2:2000 and EN 1435:1997.

4.4. Test pressure

The following minimum inner vessel test pressure shall be used in manufacture:

$P_{test} = 1.3\ (WP + 0.1)$ [MPa]

Where:

WP is in MPa.

4.5. Stress analysis

A stress analysis shall be performed to justify the minimum design wall thicknesses. A stress analysis shall be performed to justify the internal support element design when exposed to the accelerations described in paragraph 18.4.4. of this Regulation. The stress shall not exceed the minimum ultimate tensile strength of the material when calculated according

with a linear stress model. The allowable stress in the internal support elements may not have to be calculated, if it can be demonstrated that the fuel tank supports the accelerations given in paragraph 18.4.4. without any structure damage to the inner tank or its supports.

4.6. Inspection and testing

The manufacturing inspection shall specify programmes and procedures for:

(a) Manufacturing inspection, tests and acceptance criteria; and

(b) Periodic service inspections, tests and acceptance criteria. The interval of visual reinspection of the external tank surfaces shall be in accordance with paragraph 2.1.3. of this annex. A guide for manufacturer's instructions for handling, use and inspection is provided in Appendix B to this annex.

4.7. Fire protection

All tanks shall be protected from fire with pressure relief devices. The tank, its materials, pressure relief devices and any added insulation or protective material shall be designed to collectively ensure adequate safety during fire conditions in the test specified in paragraph A.1. (Annex 3B, Appendix A).

Pressure relief devices shall be tested in accordance with paragraph A.1. (Annex 3B, Appendix A).

4.8. (Reserved)

4.9. Tank supports

The manufacturer shall specify the means by which the tank(s) shall be supported for installation on vehicles. The manufacturer shall also supply installation instructions, including maximum clamping force and torque to not cause unacceptable stress in the tank or damage to the tank surface.

4.10. Design qualification tests

For the approval of each tank type the material, design, manufacture and examination shall be proved to be adequate for their intended service by meeting the appropriate requirements of the material qualification tests summarized in Table 6.1 of this annex and the tank qualification tests summarized in Table 6.2 of this annex, with all tests in accordance with the relevant methods of test as described in Appendix A to this annex. The test tank shall be selected and the tests witnessed by the competent Authority. If more tanks are subjected to the tests than are required by this annex, all results shall be documented.

4.11. Production examinations and tests

Descriptions of production examinations and tests shall be provided.

The following shall be in accordance with EN 1251-2 2000:

(a) Inspection stages;

(b) Production control test plans;

(c) Non-destructive testing;

(d) Rectification;

(e) Pressure testing.

4.12. Failure to meet test requirements

In the event of failure to meet test requirements retesting shall be carried out as follows:

(a) If there is evidence of a fault in carrying out a test, or an error of measurement, a further test shall be performed. If the result of this test is satisfactory, the first test shall be ignored.

(b) If the test has been carried out in a satisfactory manner, the cause of test failure shall be identified.

If the failure is found during non-destructive tests, all the identified defective tanks shall be rejected or repaired by an approved method. The non-rejected tanks are then considered as a new batch. All the relevant prototype or batch tests need to prove the acceptability of the new batch and shall be performed again. If one or more tests prove even partially unsatisfactory, then all tanks of the batch shall be rejected.

4.13. Change of design

A design change is any change in the selection of structural materials or dimensional change not attributable to normal manufacturing tolerances.

Minor design changes shall be permitted to be qualified through a reduced test programme. Changes of design specified in Table 6.4 shall require design qualification testing as specified.

Table 6.1
Material design qualification tests

Inner vessel material	*Relevant paragraph of this annex*
Tensile test	4.3.2.
Impact test	4.3.3.
Bending test	4.3.4.
Weld examination	4.3.5.

Table 6.2
Tank design qualification tests

	Test and annex reference
Bonfire test	Annex 3B, Appendix A. paragraph A.1
Drop test	Annex 3B, Appendix A. paragraph A.2
Hold-time test	Annex 3B, Appendix A. paragraph A.3

Table 6.3
Critical production inspection requirements

Quality inspection
Production control test plates
Non-destructive testing
Pressure testing

Table 6.4
Change of design

	Type of test		
Design change	A.1 Bonfire	A.2 Drop	A.3 Hold-time
Diameter > 20 per cent	X	X	X
Length > 50 per cent	X	X	X
Working pressure > 20 per cent	X	X	X
Insulation material / method	X		X

4.14. Pressure testing

Each tank shall be pressure tested in accordance with paragraph A.4. (Annex 3B, Appendix A).

4.15. Tank design qualification tests

4.15.1. General

Qualification testing shall be conducted on finished tanks that are representative of normal production and complete with identification marks. Selection, witnessing and documentation of the results shall be in accordance with paragraph 4.11. above.

4.15.2. Bonfire test

Tests shall be conducted in accordance with paragraph A.1 (Annex 3B, Appendix A) and meet the requirements therein.

5. Markings

5.1. On each tank, the manufacturer shall provide clear permanent markings not less than 6 mm high. Marking shall be made either by labels attached by adhesive or plates attached by welds. Adhesive labels and their application shall be in accordance with ISO 7225, or an equivalent standard. Multiple labels or plates are allowed and should be located such that they are not obscured by mounting brackets. Each tank complying with this annex shall be marked as follows:

(a) Mandatory information:

(i) "LNG ONLY";

(ii) Manufacturer's identification;

(iii) Tank identification (applicable part number and a serial number unique for every cylinder);

(iv) Working pressure and temperature;

(v) Regulation number, along with tank type and certification registration number;

(vi) The pressure relief devices and/or valves that are qualified for use with the tank or the means for obtaining information on qualified fire protection systems;

(vii) When labels are used, all tanks shall have a unique identification number stamped on an exposed metal surface to permit tracing in the event that the label is destroyed.

(b) Non-mandatory information:

On a separate label(s) the following non-mandatory information may be provided:

(i) Gas temperature range, e.g. -195 °C to 65 °C;

(ii) Nominal water capacity of the tank to two significant numbers. e.g. 120 litres;

(iii) Date of original pressure test (month and year).

The markings shall be placed in the listed sequence but the specific arrangement may be varied to match the space available. An acceptable example of mandatory information is:

LNG ONLY Manufacturer/Part Number/Serial Number 1.6 MPa (16 bar)/-160 °C ECE R 110 LNG (registration No. …) "Use Only Manufacturer-Approved Pressure Relief Device"

6. Preparations for dispatch

Prior to dispatch from the manufacturer's shop, every tank shall be internally clean. Tanks not immediately closed by the fitting of a valve, and safety devices if applicable, shall have plugs, which prevent entry of moisture and protect threads, fitted to all openings.

The manufacturer's statement of service and all necessary information to ensure the proper handling, use and in-service inspection of the tanks shall be supplied to the purchaser. The statement shall be in accordance with Appendix D to this annex.

Annex 3B - Appendix A

Test methods

A.1. Bonfire test

A.1.1. General

The bonfire tests are designed to demonstrate that finished tanks complete with the fire protection system (tank valve, pressure relief valves and/or integral thermal insulation) specified in the design will not burst when tested under the specified fire conditions. Extreme caution shall be exercised during fire testing in the event that tank rupture occurs.

A.1.2. Tank set-up

The inner tank shall be at the same temperature as the temperature of the LNG. This requirement shall be deemed met if, during the previous 24 hours, the fuel tank has contained a volume of liquid LNG at least equal to half of the volume of the inner tank.

The fuel tank shall be filled with LNG so that the quantity of LNG measured by the mass measurement system shall be within 10 per cent of the maximum allowed net quantity that may be contained in the inner tank.

A.1.3. Fire source

The length and the width of the fire shall exceed the plan dimensions of the fuel tank by 0.1 m. ISO 11439 contains directions to produce a suitable fire test. The average temperature shall remain above 590 °C for the duration of the test.

Any fuel may be used for the fire source provided it supplies uniform heat sufficient to maintain the specified test temperatures until the tank is vented. The selection of fuel should take into consideration air pollution concerns. The arrangement of the fire shall be recorded in sufficient detail to ensure the rate of heat input to the tank is reproducible. Any failure or inconsistency of the fire source during a test invalidates the result.

A.1.4. Temperature and pressure measurements

The average temperature of space 10 mm below the fuel tank as measured by two or more thermocouples shall be at least 590 °C.

Thermocouple temperatures and the tank pressure shall be recorded at intervals of every 30 seconds or less during the test.

A.1.5. General test requirements

The pressure of the fuel tank at the beginning of the test shall be within 0.1 MPa of the saturation pressure of LNG in the inner tank.

The lapse of time, from the moment that the average temperature first reaches 590 °C until the opening of the primary pressure relief valve, shall be measured.

Once the pressure relief valve opens, the test shall continue until the blow off of the pressure relief valve is complete.

A.1.6. Acceptable results

The holding time of the fuel tank, which is the lapse of time before the opening of the pressure relief valve, shall not be less than 5 minutes under an external fire.

The fuel tank shall not burst and the pressure inside the inner tank shall not exceed the permissible fault range of the inner tank. The secondary pressure valve shall limit the pressure inside the inner tank to the test pressure specified in paragraph 4.4. of Annex 3B.

A.2. Drop test

Each family of fuel tanks shall be drop tested to verify tank integrity. Drop tests shall include a 9 m drop test of the fuel tank on the most critical area of the tank (other than the piping end) and 3 m drop test on the piping end. Tank shall contain an equivalent full weight of liquid nitrogen saturated to one-half the working pressure. There shall be no loss of product for a period of one hour subsequent to the drop test other than relief valve operation and vapour between the filler neck and the secondary check valve in the case of a drop test involving the filler neck. Loss of vacuum, denting of the vessel, piping and piping protection, and damage to the support structure system are acceptable.

The tank shall be subject to a vertical drop test so that it falls on rigid, flat, non-resilient, smooth, and horizontal surface on areas defined below. To do so, the tank is suspended at a minimum height defined above the ground at a point diametrically opposite the impact area, so that the centre of gravity is vertically above.

Fuel pumps and other tank attachments shall also meet the drop test requirements for the tank and be attached as part of the tests.

A.3. Hold-time test

The tank shall be filled within 10 per cent of maximum allowed net quantity of LNG at manufacturer's specified highest point in the design filling temperature / pressure range. Hydrostatic pressure shall be recorded every minute for at least 120 hours at ambient temperature of 20 ºC ± 5 °C. Hydrostatic pressure shall be stable (within 10 kPa) or increasing throughout duration of test. The combined tank and contents weight shall be measured and verified to be stable (within 1 per cent) throughout duration of test; release of any fluid (bubble tight) during duration of test shall be unacceptable. Acceptable measured hydrostatic pressure at 120 or more hours shall be less than nominal primary relief valve pressure setting of the tank. If hydrostatic pressure is less than nominal primary relief valve pressure setting at 120 hours, the test may be continued until that pressure is reached and manufacturer's highest point in the design filling temperature/pressure range may be defined as the hydrostatic pressure recorded 120 hours prior to reaching the nominal primary relief valve pressure setting. The manufacturer may also specify a longer hold-time than 120 hours, or a hold-time (longer than 120 hours) versus design filling temperature / pressure relationship based on the recorded hydrostatic pressure time history.

A.4. Pressure test

Each inner vessel shall be examined under the test pressure defined in paragraph 4.4. of Annex 3B, maintained for at least 30 seconds without evidence of leakage, visible distortion or other defect.

Annex 3B – Appendix B

Report form

Note - This appendix is not a mandatory part of this annex.

The following forms should be used:

1. Description and serial number for vessel
2. Certificates of conformity, such as relief valves, manual valves, fill fitting, etc.
3. Radiographic test report - weld seams
4. Mechanical test report - joint tensile test, bending tests, impact tests
5. Material test reports - all steel inner vessel components

Annex 3B - Appendix C

Instructions by the tanks manufacturer on handling, use and inspection of tanks

C.1. General

The primary function of this appendix is to provide guidance to the tank purchaser, distributor, installer and user for the safe use of the tank over its intended service life.

C.2. Distribution

The manufacturer shall advise the purchaser that the instructions shall be supplied to all parties involved in the distribution, handling, installation and use of the tank. The document may be reproduced to provide sufficient copies for this purpose, however, it shall be marked to provide reference to the tank being delivered;

C.3. Reference to existing codes, standards and regulations

Specific instructions may be stated by reference to national or recognized codes, standards and regulations.

C.4. Tank handling

Handling procedures shall be provided to ensure that the tank will not suffer unacceptable damage or contamination during handling.

C.5. Installation

Installation instructions shall be provided to ensure that the tanks will not suffer unacceptable damage during installation and during normal operation over the intended service life.

Where the mounting is specified by the manufacturer, the instructions shall contain where relevant, details such as mounting design, the use of resilient gasket materials, the correct tightening torques and avoidance of direct exposure of the tank to an environment of chemical and mechanical contacts.

Where the mounting is not specified by the manufacturer, the manufacturer shall draw the purchaser's attention to possible long term impacts of the vehicle mounting system, for example: vehicle body movements and tank expansion/contraction in the pressure and temperature conditions of service.

Where applicable, the purchaser's attention shall be drawn to the need to provide installations such that liquids or solids cannot be collected to cause tank material damage;

The correct pressure relieve device to be fitted shall be specified.

C.6. Use of tanks

The manufacturer shall draw the purchaser's attention to the intended service conditions specified by this Regulation, in particular the tanks allowable maximum pressures.

C.7. In-service inspection

The manufacturer shall clearly specify the user's obligation to observe the required tank inspection requirements (e.g. reinspection interval, by authorized personnel). This information shall be in agreement with the design approval requirements.

Annex 3B - Appendix D

Report form 1

Note - This appendix is not a mandatory part of this annex.

The following forms should be used:

1. Form 1: Report of manufacturer and certificate of conformity
2. Manufactured by: .....
3. Located at:.....
4. Regulatory registration number: .....
5. Manufacturers mark and number: .....
6. Serial Number: from ….. to ….. inclusive .....
7. Tank description: .....
8. SIZE: Outside diameter: mm; Length: mm;
9. Marks stamped on shoulder or on labels of the tank are:
   (a) "LNG only": .....
   (b) "DO NOT USE AFTER":.....
   (c) "Manufacturer's mark":.....
   (d) Serial and part number:.....
   (e) Working pressure in MPa: .....
   (f) Regulation No.:.....
   (g) Fire protection type:.....
   (h) Date of original test (month and year): .....
   (i) Tare mass of empty tank (in kg): .....
   (j) Authorized body or inspectors mark:.....
   (k) Water capacity in L:.....
   (l) Test pressure in MPa: .....
   (m) Any special instructions:.....
10. Each tank was made in compliance with all requirements of Regulation No. ... in accordance with the tank description above. Required reports of test results are attached.
11. I hereby certify that all these test results proved satisfactory in every way and are in compliance with the requirements for the type listed above.
12. Comments: .....
13. Competent Authority: .....
14. Inspector's signature:.....
15. Manufacturer's signature:.....
16. Place, date: .....

Annex 4A

Provisions on the approval of the CNG automatic valve, non-return valve, pressure relief valve, pressure relief device (temperature triggered), excess flow valve, manual valve and the pressure relief device (pressure triggered)

1. The purpose of this annex is to determine the provisions on the approval of the automatic valve, the non-return valve, the pressure relief valve, the pressure relief device and the excess flow valve.

2. The CNG automatic valve

2.1. The materials constituting the CNG automatic valve which are in contact with the CNG when operating, shall be compatible with the test CNG. In order to verify this compatibility the procedure described in Annex 5D shall be used.

2.2. Operating specifications

2.2.1. The CNG automatic valve shall be so designed as to withstand a pressure of 1.5 times the working pressure (MPa) without leakage and deformation.

2.2.2. The CNG automatic valve shall be so designed as to be leak-proof at a pressure of 1.5 times the working pressure (MPa) (see Annex 5B).

2.2.3. The CNG automatic valve, being in the normal position of use specified by the manufacturer, is submitted to 20,000 operations; then it is deactivated. The automatic valve shall remain leak-proof at a pressure of 1.5 times the working pressure (MPa) (see Annex 5B).

2.2.4. The CNG automatic valve shall be so designed to operate at temperatures as specified in Annex 5O.

2.3. The electrical system, if existing, shall be isolated from the body of the automatic valve. Isolation resistance shall be > 10 MΩ.

2.4. The automatic valve activated by an electric current shall be in a "closed" position when the current is switched off.

2.5. The automatic valve has to comply with the test procedures for the Class component determined according to the scheme in Figure 1-1 of paragraph 3. of this Regulation.

3. The non-return valve

3.1. The materials constituting the non-return valve which are in contact with the CNG when operating, shall be compatible with the test CNG. In order to verify this compatibility the procedure described in Annex 5D shall be used.

3.2. Operating specifications

3.2.1. The non-return valve shall be so designed as to withstand a pressure of 1.5 times the working pressure (MPa) without leakage and deformation.

3.2.2. The non-return valve shall be so designed as to be leak-proof (external) at a pressure of 1.5 times the working pressure (MPa) (see Annex 5B).

3.2.3. The non-return valve, being in the normal position of use specified by the manufacturer, is submitted to 20,000 operations; then it is deactivated. The non-return valve shall remain leak-proof (external) at a pressure of 1.5 times the working pressure (MPa) (see Annex 5B).

3.2.4. The non-return valve shall be so designed to operate at temperatures as specified in Annex 5O.

3.3. The non-return valve has to comply with the test procedures for the Class component determined according to the scheme in Figure 1-1 of paragraph 3. of this Regulation.

4. The pressure relief valve and pressure relief device

4.1. The materials constituting the pressure relief valve and pressure relief device which are in contact with the CNG when operating, shall be compatible with the test CNG. In order to verify this compatibility, the procedure described in Annex 5D shall be used.

4.2. Operating specifications

4.2.1. The pressure relief valve and pressure relief device in Class 0 shall be so designed as to withstand a pressure of 1.5 times the working pressure (MPa) with the outlet closed off.

4.2.2. The pressure relief valve and pressure relief device of Class 1 shall be so designed as to be leak-proof at a pressure of 1.5 times the working pressure (MPa) with the outlet closed off (see Annex 5B).

4.2.3. The pressure relief valve of Class 1 and Class 2 shall be so designed as to be leak-proof at twice the working pressure with the outlets closed off.

4.2.4. The pressure relief device shall be so designed to open the fuse at a temperature of 110 °C ± 10 °C.

4.2.5. The pressure relief valve of Class 0 shall be so designed to operate at temperatures from -40 °C to 85 °C.

4.3. The pressure relief valve and pressure relief device have to comply with the test procedures for the Class component determined according to the scheme in Figure 1-1 of paragraph 3. of this Regulation.

5. The excess flow valve

5.1. The materials constituting the excess flow valve which are in contact with the CNG when operating, shall be compatible with the test CNG. In order to verify this compatibility, the procedure described in Annex 5D shall be used.

5.2. Operating specifications

5.2.1. The excess flow valve, if it is not integrated in the tank, shall be so designed as to withstand a pressure of 1.5 times the working pressure (MPa).

5.2.2. The excess flow valve shall be so designed as to be leak-proof at a pressure of 1.5 times the working pressure (MPa).

5.2.3. The excess flow valve shall be so designed to operate at temperatures as specified in Annex 5O.

5.3. The excess flow valve shall be mounted inside the container.

5.4. The excess flow valve shall be designed with a bypass to allow for equalization of pressures.

5.5. The excess flow valve shall cut-off at a pressure difference over the valve of 650 kPa.

5.6. When the excess flow valve is at cut-off position, the by-pass flow through the valve shall not exceed 0.05 normal m^3/minute at a differential pressure of 10,000 kPa.

5.7. The device have to comply with the test procedures for the Class components, specified in the scheme in Figure 1-1 of paragraph 3. of this Regulation, except overpressure, external leakage, resistance to dry heat test, ozone ageing.

6. The manual valve

6.1. The manual valve device in Class 0 shall be designed to withstand a pressure of 1.5 times the working pressure.

6.2. The manual valve device in Class 0 shall be designed to operate at a temperature from -40 °C to 85 °C.

6.3. Manual valve device requirements

One specimen shall be submitted to a fatigue test at a pressure cycling rate not to exceed 4 cycles per minute as follows: held at 20 °C while pressured for 2,000 cycles between 2 MPa and 26 MPa.

7. Pressure relief device (pressure triggered)

7.1. The materials constituting the PRD (pressure triggered) which are in contact with the CNG when operating, shall be compatible with the test CNG. In order to verify this compatibility, the procedure described in Annex 5D shall be used.

7.2. Operating specifications

7.2.1. The PRD (pressure triggered) of Class 0, shall be so designed to operate at temperatures as specified in Annex 5O.

7.2.2. The burst pressure shall be 34 MPa ± 10 per cent at ambient temperature and at the maximum operating temperature as indicated in Annex 5O.

7.3. The device has to comply with the test procedures for the Class components, specified in the scheme in Figure 1-1 of paragraph 3. of this Regulation, except overpressure, internal leakage and external leakage.

7.4. PRD (pressure triggered) requirements.

7.4.1. Continued operation

7.4.1.1. Test procedure

Cycle the PRD (pressure triggered) according to Table 3, with water between 10 per cent and 100 per cent of the working pressure, at a maximum cyclic rate of 10 cycles per minute and a temperature of 82 °C ± 2 °C or 57 °C ± 2 °C.

Table 3
Test temperatures and cycles

Temperature [°C]	*Cycles*
82	2,000
57	18,000

7.4.1.2. Requirements

7.4.1.2.1. At the completion of the test, the component shall not leak more than 15 cm^3/hour when submitted to a gas pressure equal to the maximum working pressure at ambient temperature and at the maximum operating temperature as indicated in Annex 5O.

7.4.1.2.2. At the completion of the test, the PRD (pressure triggered) burst pressure shall be 34 MPa ± 10 per cent at ambient temperature and at the maximum operating temperature as indicated in Annex 5O.

7.4.2. Corrosion resistance test

7.4.2.1. Test procedure

The PRD (pressure triggered) shall be subjected to the test procedure described in Annex 5E, except the leakage test.

7.4.2.2. Requirements

7.4.2.2.1. At the completion of the test, the component shall not leak more than 15 cm^3/hour when submitted to a gas pressure equal to the maximum working pressure at ambient temperature and at the maximum operating temperature as indicated in Annex 5O.

7.4.2.2.2. At the completion of the test, the PRD (pressure triggered) burst pressure shall be 34 MPa ± 10 per cent at ambient temperature and at the maximum operating temperature as indicated in Annex 5O.

Annex 4B

Provisions on the approval of flexible fuel lines or hoses for CNG and hoses for LNG

0. The purpose of this annex is to determine the provisions on the approval of flexible hoses for use with CNG or LNG.

This annex covers three types of CNG flexible hoses (a), (b), (c) and one type of LNG hose (d):

(a) High pressure hoses (Class 0);

(b) Medium pressure hoses (Class 1);

(c) Low pressure hoses (Class 2);

(d) LNG hoses (Class 5).

1. High pressure hoses, Class 0 classification

1.1. General specifications

1.1.1. The hose shall be so designed as to withstand a maximum working pressure of 1.5 times the working pressure (MPa).

1.1.2. The hose shall be so designed as to withstand temperatures as specified in Annex 5O.

1.1.3. The inside diameter shall be in compliance with Table 1 of standard ISO 1307.

1.2. Hose construction

1.2.1. The hose shall embody a smooth-bore tube and a cover of suitable synthetic material, reinforced with one or more interlayer(s).

1.2.2. The reinforcing interlayer(s) has (have) to be protected by a cover against corrosion.

If for the reinforcing interlayer(s) corrosion-resistant-material is used (i.e. stainless-steel) a cover is not required.

1.2.3. The lining and the cover shall be smooth and free from pores, holes and strange elements.

An intentionally provided puncture in the cover shall not be considered as an imperfection.

1.2.4. The cover has to be intentionally perforated to avoid the forming of bubbles.

1.2.5. When the cover is punctured and the interlayer is made of a non-corrosion-resistant material, the interlayer has to be protected against corrosion.

1.3. Specifications and tests for the lining

1.3.1. Tensile strength and elongation for rubber material and for thermoplastic elastomers (TPE)

1.3.1.1. Tensile strength and elongation at break according to ISO 37. Tensile strength not less than 20 MPa and elongation at break not less than 250 per cent.

1.3.1.2. Resistance to n-pentane according to ISO 1817 with the following conditions:

(a) Medium: n-pentane;

(b) Temperature: 23 °C (tolerance according to ISO 1817);

(c) Immersion period: 72 hours.

Requirements:

(a) Maximum change in volume 20 per cent;

(b) Maximum change in tensile strength 25 per cent;

(c) Maximum change in elongation at break 30 per cent.

After storage in air with a temperature of 40 °C for a period of 48 hours the mass compared to the original value may not decrease more than 5 per cent.

1.3.1.3. Resistance to ageing according to ISO 188 with the following conditions:

(a) Temperature: 115 °C (test temperature = maximum operating temperature minus 10 °C);

(b) Exposure period: 24 and 336 hours.

After ageing the specimens have to be conditioned at 23 °C and 50 per cent relative humidity for at least 21 days prior to carrying out the tensile test according to paragraph 1.3.1.1. above.

Requirements:

(a) Maximum change in tensile strength 35 per cent after 336 hours ageing compared to the tensile strength of the 24 hours aged material;

(b) Maximum change in elongation at break 25 per cent after 336 hours ageing compared to the elongation at break of the 24 hours aged material.

1.3.2. Tensile strength and elongation specific for thermoplastic material.

1.3.2.1. Tensile strength and elongation at break according to ISO 527-2 with the following conditions:

(a) Specimen type: type 1 BA;

(b) Tensile speed: 20 mm/minute.

The material has to be conditioned for at least 21 days at 23 °C and 50 per cent relative humidity prior to testing.

Requirements:

(a) Tensile strength not less than 20 MPa;

(b) Elongation at break not less than 100 per cent.

1.3.2.2. Resistance to n-pentane according to ISO 1817 with the following conditions:

(a) Medium: n-pentane;

(b) Temperature: 23 °C (tolerance according to ISO 1817);

(c) Immersion period: 72 hours.

Requirements:

(a) Maximum change in volume 2 per cent;

(b) Maximum change in tensile strength 10 per cent;

(c) Maximum change in elongation at break 10 per cent.

After storage in air with a temperature of 40 °C for a period of 48 hours the mass compared to the original value may not decrease more than 5 per cent.

1.3.2.3. Resistance to ageing according to ISO 188 with the following conditions:

(a) Temperature: 115 °C (test temperature = maximum operating temperature minus 10 °C);

(b) Exposure period: 24 and 336 hours.

After ageing the specimens have to be conditioned at 23 °C and 50 per cent relative humidity for at least 21 days prior to carrying out the tensile test according to paragraph 1.3.2.1. above.

Requirements:

(a) Maximum change in tensile strength 35 per cent after 336 hours ageing compared to the tensile strength of the 24 hours aged material;

(b) Maximum change in elongation at break 25 per cent after 336 hours ageing compared to the elongation at break of the 24 hours aged material.

1.4. Specifications and test-method for the cover

1.4.1. Tensile strength and elongation for rubber material and for thermoplastic elastomers (TPE)

1.4.1.1. Tensile strength and elongation at break according to ISO 37. Tensile strength not less than 10 MPa and elongation at break not less than 250 per cent.

1.4.1.2. Resistance to n-hexane according to ISO 1817 with the following conditions:

(a) Medium: n-hexane;

(b) Temperature: 23 °C (tolerance acc.to ISO 1817);

(c) Immersion period: 72 hours.

Requirements:

(a) Maximum change in volume 30 per cent;

(b) Maximum change in tensile strength 35 per cent;

(c) Maximum change in elongation at break 35 per cent.

1.4.1.3. Resistance to ageing according to ISO 188 with the following conditions:

(a) Temperature: 115 °C (test temperature = maximum operating temperature minus 10 °C);

(b) Exposure period: 24 and 336 hours.

After ageing the specimens have to be conditioned at 23 °C and 50 per cent relative humidity for at least 21 days prior to carrying out the tensile test according to paragraph 1.4.1.1. above.

Requirements:

(a) Maximum change in tensile strength 35 per cent after 336 hours ageing compared to the tensile strength of the 24 hours aged material;

(b) Maximum change in elongation at break 25 per cent after 336 hours ageing compared to the elongation at break of the 24 hours aged material.

1.4.2. Tensile strength and elongation specific for thermoplastic material.

1.4.2.1. Tensile strength and elongation at break according to ISO 527-2 with the following conditions:

(a) Specimen type: type 1 BA;

(b) Tensile speed: 20 mm/minute.

The material has to be conditioned for at least 21 days at 23 °C and 50 per cent relative humidity prior to testing.

Requirements:

(a) Tensile strength not less than 20 MPa;

(b) Elongation at break not less than 100 per cent.

1.4.2.2. Resistance to n-hexane according to ISO 1817 with the following conditions:

(a) Medium: n-hexane;

(b) Temperature: 23 °C (tolerance according to ISO 1817);

(c) Immersion period: 72 hours.

Requirements:

(a) Maximum change in volume 2 per cent;

(b) Maximum change in tensile strength 10 per cent;

(c) Maximum change in elongation at break 10 per cent.

After storage in air with a temperature of 40 °C for a period of 48 hours the mass compared to the original value may not decrease more than 5 per cent.

1.4.2.3. Resistance to ageing according to ISO 188 with the following conditions:

(a) Temperature: 115 °C (test temperature = maximum operating temperature minus 10 °C);

(b) Exposure period: 24 and 336 hours.

After ageing the specimens have to be conditioned at 23 °C and 50 per cent relative humidity for at least 21 days prior to carrying out the tensile test according to paragraph 1.4.2.1. above.

Requirements:

(a) Maximum change in tensile strength 20 per cent after 336 hours ageing compared to the tensile strength of the 24 hours aged material;

(b) Maximum change in elongation at break 50 per cent after 336 hours ageing compared to the elongation at break of the 24 hours aged material.

1.4.3. Resistance to ozone

1.4.3.1. The test has to be performed in compliance with standard ISO 1431/1.

1.4.3.2. The test-pieces, which have to be stretched to an elongation of 20 per cent shall have to be exposed to air of 40 °C with an ozone-concentration of 50 parts per hundred million during 120 hours.

1.4.3.3. No cracking of the test pieces is allowed.

1.5. Specifications for uncoupled hose

1.5.1. Gas-tightness (permeability)

1.5.1.1. A hose at a free length of 1 m has to be connected to a container filled with liquid propane, having a temperature of 23 °C ± 2 °C.

1.5.1.2. The test has to be carried out in compliance with the method described in standard ISO 4080.

1.5.1.3. The leakage through the wall of the hose shall not exceed 95 cm^3 per metre of hose per 24 hours.

1.5.2. Resistance at low temperature

1.5.2.1. The test has to be carried out in compliance with the method described in standard ISO 4672-1978, method B.

1.5.2.2. Test temperature: -40 °C ± 3 °C; or

-20 °C ± 3 °C, if applicable.

1.5.2.3. No cracking or rupture is allowed.

1.5.3. Bending test

1.5.3.1. An empty hose, at a length of approximately 3.5 m shall be able to withstand 3,000 times the hereafter prescribed alternating-bending-test without breaking. After the test the hose shall be capable of withstanding the test pressure as mentioned in paragraph 1.5.4.2. below. The test shall be performed on both new hose and after ageing according to ISO 188 as prescribed in paragraph 1.4.2.3. and subsequently to ISO 1817 as prescribed in paragraph 1.4.2.2. above.

1.5.3.2. Figure 1 (example only)

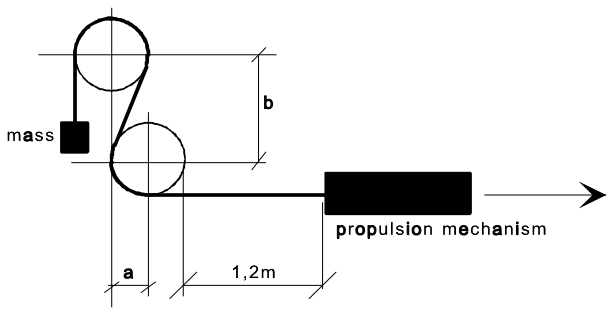

Hose inside diameter (mm)	*Bending radius (mm) (Figure 1)*	*Distance between centres (mm) (Figure 1)*	
		Vertical b	*Horizontal a*
up to 13	102	241	102
13 to 16	153	356	153
from 16 to 20	178	419	178

1.5.3.3. The testing-machine (Figure 1) shall consist of a steel frame, provided with two wooden wheels, with a rim-width of approximately 130 mm.

The circumference of the wheels shall be grooved for the guidance of the hose.

The radius of the wheels, measured to the bottom of the groove, shall be as indicated in paragraph 1.5.3.2. above.

The longitudinal median planes of both wheels shall be in the same vertical plane and the distance between the wheel-centres shall be in accordance with paragraph 1.5.3.2. above.

Each wheel shall be able to rotate freely round its pivot-centre.

A propulsion-mechanism pulls the hose over the wheels at a speed of four complete motions per minute.

1.5.3.4. The hose shall be S-shape-like installed over the wheels (see Figure 1).

The end that runs over the upper wheel shall be furnished with a sufficient mass as to achieve a complete snuggling of the hose against the wheels. The part that runs over the lower wheel is attached to the propulsion-mechanism.

The mechanism shall be so adjusted, that the hose travels a total distance of 1.2 m in both directions.

1.5.4. Hydraulic test pressure and appointment of the minimum burst-pressure

1.5.4.1. The test has to be carried out in compliance with the method described in standard ISO 1402.

1.5.4.2. The test pressure of 1.5 times the working pressure (MPa) shall be applied during 10 minutes, without any leakage.

1.5.4.3. The burst pressure shall not be less than 45 MPa.

1.6. Couplings

1.6.1. The couplings shall be made from steel or brass and the surface shall be corrosion-resistant.

1.6.2. The couplings shall be of the crimp-fitting type.

1.6.2.1. The swivel-nut shall be provided with U.N.F.-thread.

1.6.2.2. The sealing cone of swivel-nut type shall be of the type with a half vertical angle of 45°.

1.6.2.3. The couplings can be made as swivel-nut type or as quick-connector type.

1.6.2.4. It shall be impossible to disconnect the quick-connector type without specific measures or the use of dedicated tools.

1.7. Assembly of hose and couplings

1.7.1. The construction of the couplings shall be such, that it is not necessary to peel the cover unless the reinforcement of the hose consists of corrosion-resistant material.

1.7.2. The hose assembly has to be subjected to an impulse test in compliance with standard ISO 1436.

1.7.2.1. The test has to be completed with circulating oil having a temperature of 93 °C, and a minimum pressure of 26 MPa.

1.7.2.2. The hose has to be subjected to 150,000 impulses.

1.7.2.3. After the impulse-test the hose has to withstand the test pressure as mentioned in paragraph 1.5.4.2. above.

1.7.3. Gas-tightness

1.7.3.1. The hose assembly (hose with couplings) has to withstand during five minutes a gas pressure of 1.5 times the working pressure (MPa) without any leakage.

1.8. Markings

1.8.1. Every hose shall bear, at intervals of not greater than 0.5 m, the following clearly legible and indelible identification markings consisting of characters, figures or symbols.

1.8.1.1. The trade name or mark of the manufacturer.

1.8.1.2. The year and month of fabrication.

1.8.1.3. The size and type-marking.

1.8.1.4. The identification-marking "CNG Class 0".

1.8.2. Every coupling shall bear the trade name or mark of the assembling manufacturer.

2. Medium pressure hoses, Class 1 classification

2.1. General specifications

2.1.1. The hose shall be so designed as to withstand a maximum working pressure of 3 MPa.

2.1.2. The hose shall be so designed as to withstand temperatures as specified in Annex 5O.

2.1.3. The inside diameter shall be in compliance with Table 1 of standard ISO 1307.

2.2. Hose construction

2.2.1. The hose shall embody a smooth-bore tube and a cover of suitable synthetic material, reinforced with one or more interlayer(s).

2.2.2. The reinforcing interlayer(s) has (have) to be protected by a cover against corrosion.

If for the reinforcing interlayer(s) corrosion-resistant-material is used (i.e. stainless-steel) a cover is not required.

2.2.3. The lining and the cover shall be smooth and free from pores, holes and strange elements.

An intentionally provided puncture in the cover shall not be considered as an imperfection.

2.3. Specifications and tests for the lining

2.3.1. Tensile strength and elongation for rubber material and for thermoplastic elastomers (TPE)

2.3.1.1. Tensile strength and elongation at break according to standard ISO 37. Tensile strength not less than 10 MPa and elongation at break not less than 250 per cent.

2.3.1.2. Resistance to n-pentane according to ISO 1817 with the following conditions:

(a) Medium: n-pentane;

(b) Temperature: 23 °C (tolerance acc. to ISO 1817);

(c) Immersion period: 72 hours.

Requirements:

(a) Maximum change in volume 20 per cent;

(b) Maximum change in tensile strength 25 per cent;

(c) Maximum change in elongation at break 30 per cent.

After storage in air with a temperature of 40 °C for a period of 48 hours the mass compared to the original value may not decrease more than 5 per cent.

2.3.1.3. Resistance to ageing according to ISO 188 with the following conditions:

(a) Temperature: 115 °C (test temperature = maximum operating temperature minus 10 °C);

(b) Exposure period: 24 and 336 hours.

After ageing the specimens have to be conditioned at 23 °C and 50 per cent relative humidity for at least 21 days prior to carrying out the tensile test according to paragraph 2.3.1.1. above.

Requirements:

(a) Maximum change in tensile strength 35 per cent after 336 hours ageing compared to the tensile strength of the 24 hours aged material;

(b) Maximum change in elongation at break 25 per cent after 336 hours ageing compared to the elongation at break of the 24 hours aged material.

2.3.2. Tensile strength and elongation specific for thermoplastic material.

2.3.2.1. Tensile strength and elongation at break according to ISO 527-2 with the following conditions:

(a) Specimen type: type 1 BA;

(b) Tensile speed: 20 mm/minute.

The material has to be conditioned for at least 21 days at 23 °C and 50 per cent relative humidity prior to testing.

Requirements:

(a) Tensile strength not less than 20 MPa;

(b) Elongation at break not less than 100 per cent.

2.3.2.2. Resistance to n-pentane according to ISO 1817 with the following conditions:

(a) Medium: n-pentane;

(b) Temperature: 23 °C (tolerance according to ISO 1817);

(c) Immersion period: 72 hours.

Requirements:

(a) Maximum change in volume 2 per cent;

(b) Maximum change in tensile strength 10 per cent;

(c) Maximum change in elongation at break 10 per cent.

After storage in air with a temperature of 40 °C for a period of 48 hours the mass compared to the original value may not decrease more than 5 per cent.

2.3.2.3. Resistance to ageing according to ISO 188 with the following conditions:

(a) Temperature: 115 °C (test temperature = maximum operating temperature minus 10 °C);

(b) Exposure period: 24 and 336 hours.

After ageing the specimens have to be conditioned at 23 °C and 50 per cent relative humidity for at least 21 days prior to carrying out the tensile test according to paragraph 2.3.2.1. above.

Requirements:

(a) Maximum change in tensile strength 35 per cent after 336 hours ageing compared to the tensile strength of the 24 hours aged material;

(b) Maximum change in elongation at break 25 per cent after 336 hours ageing compared to the elongation at break of the 24 hours aged material.

2.4. Specifications and test-method for the cover

2.4.1. Tensile strength and elongation for rubber material and for thermoplastic elastomers (TPE)

2.4.1.1. Tensile strength and elongation at break according to ISO 37. Tensile strength not less than 10 MPa and elongation at break not less than 250 per cent.

2.4.1.2. Resistance to n-hexane according to ISO 1817 with the following conditions:

(a) Medium: n-hexane;

(b) Temperature: 23 °C (tolerance according to ISO 1817);

(c) Immersion period: 72 hours.

Requirements:

(a) Maximum change in volume 30 per cent;

(b) Maximum change in tensile strength 35 per cent;

(c) Maximum change in elongation at break 35 per cent.

2.4.1.3. Resistance to ageing according to ISO 188 with the following conditions:

(a) Temperature: 115 °C (test temperature = maximum operating temperature minus 10 °C);

(b) Exposure period: 24 and 336 hours.

After ageing the specimens have to be conditioned at 23 °C and 50 per cent relative humidity for at least 21 days prior to carrying out the tensile test according to paragraph 2.4.1.1. above.

Requirements:

(a) Maximum change in tensile strength 35 per cent after 336 hours ageing compared to the tensile strength of the 24 hours aged material;

(b) Maximum change in elongation at break 25 per cent after 336 hours ageing compared to the elongation at break of the 24 hours aged material.

2.4.2. Tensile strength and elongation specific for thermoplastic material.

2.4.2.1. Tensile strength and elongation at break according to ISO 527-2 with the following conditions:

(a) Specimen type: type 1 BA;

(b) Tensile speed: 20 mm/minute.

The material has to be conditioned for at least 21 days at 23 °C and 50 per cent relative humidity prior to testing.

Requirements:

(a) Tensile strength not less than 20 MPa;

(b) Elongation at break not less than 100 per cent.

2.4.2.2. Resistance to n-hexane according to ISO 1817 with the following conditions:

(a) Medium: n-hexane;

(b) Temperature: 23 °C (tolerance according to ISO 1817);

(c) Immersion period: 72 hours.

Requirements:

(a) Maximum change in volume 2 per cent;

(b) Maximum change in tensile strength 10 per cent;

(c) Maximum change in elongation at break 10 per cent.

After storage in air with a temperature of 40 °C for a period of 48 hours the mass compared to the original value may not decrease more than 5 per cent.

2.4.2.3. Resistance to ageing according to ISO 188 with the following conditions:

(a) Temperature: 115 °C (test temperature = maximum operating temperature minus 10 °C);

(b) Exposure period: 24 and 336 hours.

After ageing the specimens have to be conditioned at 23 °C and 50 per cent relative humidity for at least 21 days prior to carrying out the tensile test according to paragraph 2.4.2.1. above.

Requirements:

(a) Maximum change in tensile strength 20 per cent after 336 hours ageing compared to the tensile strength of the 24 hours aged material;

(b) Maximum change in elongation at break 50 per cent after 336 hours ageing compared to the elongation at break of the 24 hours aged material.

2.4.3. Resistance to ozone

2.4.3.1. The test has to be performed in compliance with standard ISO 1431/1.

2.4.3.2. The test-pieces, which have to be stretched to an elongation of 20 per cent shall have to be exposed to air of 40 °C with an ozone concentration of 50 parts per hundred million during 120 hours.

2.4.3.3. No cracking of the test pieces is allowed.

2.5. Specifications for uncoupled hose

2.5.1. Gas-tightness (permeability)

2.5.1.1. A hose at a free length of 1 m has to be connected to a container filled with liquid propane, having a temperature of 23 °C ± 2 °C.

2.5.1.2. The test has to be carried out in compliance with the method described in standard ISO 4080.

2.5.1.3. The leakage through the wall of the hose shall not exceed 95 cm^3 per metre of hose per 24 hours.

2.5.2. Resistance at low temperature

2.5.2.1. The test has to be carried out in compliance with the method described in standard ISO 4672-1978, method B.

2.5.2.2. Test temperature: -40 °C ± 3 °C; or

-20 °C ± 3 °C, if applicable.

2.5.2.3. No cracking or rupture is allowed.

2.5.3. Bending test

2.5.3.1. An empty hose, at a length of approximately 3.5 m shall be able to withstand 3,000 times the hereafter prescribed alternating-bending-test without breaking. After the test the hose shall be capable of withstanding the test pressure as mentioned in paragraph 2.5.4.2. below. The test shall be performed on both new hose and after ageing according to ISO 188 as prescribed in paragraph 2.4.2.3. and subsequently to ISO 1817 as prescribed in paragraph 2.4.2.2. above.

2.5.3.2. Figure 2 (example only)

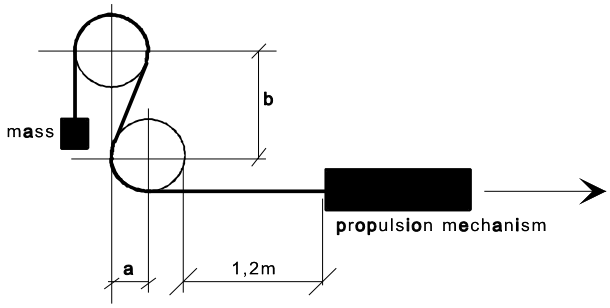

Hose inside diameter [mm]	*Bending radius [mm] (Figure 2)*	*Distance between centres [mm] (Figure 2)*	
		Vertical b	*Horizontal a*
up to 13	102	241	102
13 to 16	153	356	153
from 16 to 20	178	419	178

2.5.3.3. The testing-machine (Figure 2) shall consist of a steel frame, provided with two wooden wheels, with a rim-width of approximately 130 mm.

The circumference of the wheels shall be grooved for the guidance of the hose.

The radius of the wheels, measured to the bottom of the groove, shall be as indicated in paragraph 2.5.3.2. above.

The longitudinal median planes of both wheels shall be in the same vertical plane and the distance between the wheel-centres shall be in accordance with paragraph 2.5.3.2. above.

Each wheel shall be able to rotate freely round its pivot-centre.

A propulsion-mechanism pulls the hose over the wheels at a speed of four complete motions per minute.

2.5.3.4. The hose shall be S-shape-like installed over the wheels (see Figure 2).

The end that runs over the upper wheel shall be furnished with a sufficient mass as to achieve a complete snuggling of the hose against the wheels. The part that runs over the lower wheel is attached to the propulsion mechanism.

The mechanism shall be so adjusted, that the hose travels a total distance of 1.2 m in both directions.

2.5.4. Hydraulic test pressure

2.5.4.1. The test has to be carried out in compliance with the method described in standard ISO 1402.

2.5.4.2. The test pressure of 3 MPa shall be applied during 10 minutes, without any leakage.

2.6. Couplings

2.6.1. If a coupling is mounted on the hose the following conditions have to be met.

2.6.2. The couplings shall be made from steel or brass and the surface shall be corrosion-resistant.

2.6.3. The couplings shall be of the crimp-fitting type.

2.6.4. The couplings can be made as swivel-nut type or as quick-connector type.

2.6.5. It shall be impossible to disconnect the quick-connector type without specific measures or the use of dedicated tools.

2.7. Assembly of hose and couplings

2.7.1. The construction of the couplings shall be such, that it is not necessary to peel the cover unless the reinforcement of the hose consists of corrosion-resistant material.

2.7.2. The hose assembly has to be subjected to an impulse test in compliance with standard ISO 1436.

2.7.2.1. The test has to be completed with circulating oil having a temperature of 93 °C, and a minimum pressure of 1.5 times the maximum working pressure.

2.7.2.2. The hose has to be subjected to 150,000 impulses.

2.7.2.3. After the impulse-test the hose has to withstand the test pressure as mentioned in paragraph 2.5.4.2. above.

2.7.3. Gas-tightness

2.7.3.1. The hose assembly (hose with couplings) has to withstand during five minutes a gas pressure of 3 MPa without any leakage.

2.8. Markings

2.8.1. Every hose shall bear, at intervals of not greater than 0.5 m, the following clearly legible and indelible identification markings consisting of characters, figures or symbols.

2.8.1.1. The trade name or mark of the manufacturer.

2.8.1.2. The year and month of fabrication.

2.8.1.3. The size and type marking.

2.8.1.4. The identification-marking "CNG Class 1".

2.8.2. Every coupling shall bear the trade name or mark of the assembling manufacturer.

3. Low pressure hoses, Class 2 classification

3.1. General specifications

3.1.1. The hose shall be so designed as to withstand a maximum working pressure of 450 kPa.

3.1.2. The hose shall be so designed as to withstand temperatures as specified in Annex 5O.

3.1.3. The inside diameter shall be in compliance with Table 1 of standard ISO 1307.

3.2. (Not allocated)

3.3. Specifications and tests for the lining

3.3.1. Tensile strength and elongation for rubber material and for thermoplastic elastomers (TPE)

3.3.1.1. Tensile strength and elongation at break according to standard ISO 37

Tensile strength not less than 10 MPa and elongation at break not less than 250 per cent.

3.3.1.2. Resistance to n-pentane according to standard ISO 1817 with the following conditions:

(a) Medium: n-pentane;

(b) Temperature: 23 °C (tolerance according to ISO 1817);

(c) Immersion period: 72 hours.

Requirements:

(a) Maximum change in volume 20 per cent;

(b) Maximum change in tensile strength 25 per cent;

(c) Maximum change in elongation at break 30 per cent.

After storage in air with a temperature of 40 °C for a period of 48 hours the mass compared to the original value may not decrease more than 5 per cent.

3.3.1.3. Resistance to ageing according to ISO 188 with the following conditions:

(a) Temperature: 115 °C (test temperature = maximum operating temperature minus 10 °C);

(b) Exposure period: 24 and 336 hours.

After ageing the specimens have to be conditioned at 23 °C and 50 per cent relative humidity for at least 21 days prior to carrying out the tensile test according to paragraph 3.3.1.1. above.

Requirements:

(a) Maximum change in tensile strength 35 per cent after 336 hours ageing compared to the tensile strength of the 24 hours aged material;

(b) Maximum change in elongation at break 25 per cent after 336 hours ageing compared to the elongation at break of the 24 hours aged material.

3.3.2. Tensile strength and elongation specific for thermoplastic material.

3.3.2.1. Tensile strength and elongation at break according to ISO 527-2 with the following conditions:

(a) Specimen type: type 1 BA;

(b) Tensile speed: 20 mm/minute.

The material has to be conditioned for at least 21 days at 23 °C and 50 per cent relative humidity prior to testing.

Requirements:

(a) Tensile strength not less than 20 MPa;

(b) Elongation at break not less than 100 per cent.

3.3.2.2. Resistance to n-pentane according to ISO 1817 with the following conditions:

(a) Medium: n-pentane;

(b) Temperature: 23 °C (tolerance according to ISO 1817);

(c) Immersion period: 72 hours.

Requirements:

(a) Maximum change in volume 2 per cent;

(b) Maximum change in tensile strength 10 per cent;

(c) Maximum change in elongation at break 10 per cent.

After storage in air with a temperature of 40 °C for a period of 48 hours the mass compared to the original value may not decrease more than 5 per cent.

3.3.2.3. Resistance to ageing according to ISO 188 with the following conditions:

(a) Temperature: 115 °C (test temperature = maximum operating temperature minus 10 °C);

(b) Exposure period: 24 and 336 hours.

After ageing the specimens have to be conditioned at 23 °C and 50 per cent relative humidity for at least 21 days prior to carrying out the tensile test according to paragraph 3.3.2.1. above.

Requirements:

(a) Maximum change in tensile strength 35 per cent after 336 hours ageing compared to the tensile strength of the 24 hours aged material;

(b) Maximum change in elongation at break 25 per cent after 336 hours ageing compared to the elongation at break of the 24 hours aged material.

3.4. Specifications and test-method for the cover

3.4.1. Tensile strength and elongation for rubber material and for thermoplastic elastomers (TPE)

3.4.1.1. Tensile strength and elongation at break according to ISO 37

Tensile strength not less than 10 MPa and elongation at break not less than 250 per cent.

3.4.1.2. Resistance to n-hexane according to ISO 1817 with the following conditions:

(a) Medium: n-hexane;

(b) Temperature: 23 °C (tolerance acc. to ISO 1817);

(c) Immersion period: 72 hours.

Requirements:

(a) Maximum change in volume 30 per cent;

(b) Maximum change in tensile strength 35 per cent;

(c) Maximum change in elongation at break 35 per cent.

3.4.1.3. Resistance to ageing according to ISO 188 with the following conditions:

(a) Temperature: 115 °C (test temperature = maximum operating temperature minus 10 °C);

(b) Exposure period: 24 and 336 hours.

After ageing the specimens have to be conditioned at 23 °C and 50 per cent relative humidity for at least 21 days prior to carrying out the tensile test according to paragraph 3.4.1.1. above.

Requirements:

(a) Maximum change in tensile strength 35 per cent after 336 hours ageing compared to the tensile strength of the 24 hours aged material;

(b) Maximum change in elongation at break 25 per cent after 336 hours ageing compared to the elongation at break of the 24 hours aged material.

3.4.2. Tensile strength and elongation specific for thermoplastic material.

3.4.2.1. Tensile strength and elongation at break according to ISO 527-2 with the following conditions:

(a) Specimen type: type 1 BA;

(b) Tensile speed: 20 mm/minute.

The material has to be conditioned for at least 21 days at 23 °C and 50 per cent relative humidity prior to testing.

Requirements:

(a) Tensile strength not less than 20 MPa;

(b) Elongation at break not less than 100 per cent.

3.4.2.2. Resistance to n-hexane according to ISO 1817 with the following conditions:

(a) Medium: n-hexane;

(b) Temperature: 23 °C (tolerance according to ISO 1817);

(c) Immersion period: 72 hours.

Requirements:

(a) Maximum change in volume 2 per cent;

(b) Maximum change in tensile strength 10 per cent;

(c) Maximum change in elongation at break 10 per cent.

After storage in air with a temperature of 40 °C for a period of 48 hours the mass compared to the original value may not decrease more than 5 per cent.

3.4.2.3. Resistance to ageing according to ISO 188 with the following conditions:

(a) Temperature: 115 °C (test temperature = maximum operating temperature minus 10 °C);

(b) Exposure period: 24 and 336 hours.

After ageing the specimens have to be conditioned at 23 °C and 50 per cent relative humidity for at least 21 days prior to carrying out the tensile test according to paragraph 3.4.2.1. above.

Requirements:

(a) Maximum change in tensile strength 20 per cent after 336 hours ageing compared to the tensile strength of the 24 hours aged material;

(b) Maximum change in elongation at break 50 per cent after 336 hours ageing compared to the elongation at break of the 24 hours aged material.

3.4.3. Resistance to ozone

3.4.3.1. The test has to be performed in compliance with standard ISO 1431/1.

3.4.3.2. The test-pieces, which have to be stretched to an elongation of 20 per cent shall have to be exposed to air of 40 °C and a relative humidity of 50 per cent ± 10 per cent with an ozone concentration of 50 parts per hundred million during 120 hours.

3.4.3.3. No cracking of the test pieces is allowed.

3.5. Specifications for uncoupled hose

3.5.1. Gas-tightness (permeability)

3.5.1.1. A hose at a free length of 1 m has to be connected to a container filled with liquid propane, having a temperature of 23 °C ± 2 °C.

3.5.1.2. The test has to be carried out in compliance with the method described in standard ISO 4080.

3.5.1.3. The leakage through the wall of the hose shall not exceed 95 cm^3 per metre of hose per 24 hours.

3.5.2. Resistance at low temperature

3.5.2.1. The test has to be carried out in compliance with the method described in standard ISO 4672, method B.

3.5.2.2. Test temperature: -40 °C ± 3 °C; or

-20 °C ± 3 °C, if applicable.

3.5.2.3. No cracking or rupture is allowed.

3.5.3. Resistance at high temperature

3.5.3.1. A piece of hose, pressurized at 450 kPa, with a minimal length of 0.5 m shall be put in an oven at a temperature of 120 °C ± 2 °C during 24 hours. The test shall be performed on both new hose and after ageing according to ISO 188 as prescribed in paragraph 3.4.2.3. and subsequently to ISO 1817 as prescribed in paragraph 3.4.2.2. above.

3.5.3.2. The leakage through the wall of the hose shall not exceed 95 cm^3 per metre of hose per 24 hours.

3.5.3.3. After the test the hose shall withstand the test pressure of 50 kPa during 10 minutes. The leakage through the wall of the hose shall not exceed 95 cm^3 per metre of hose per 24 hours.

3.5.4. Bending test

3.5.4.1. An empty hose, at a length of approximately 3.5 m shall be able to withstand 3,000 times the hereafter prescribed alternating-bending-test without breaking.

3.5.4.2. Figure 3 (example only)

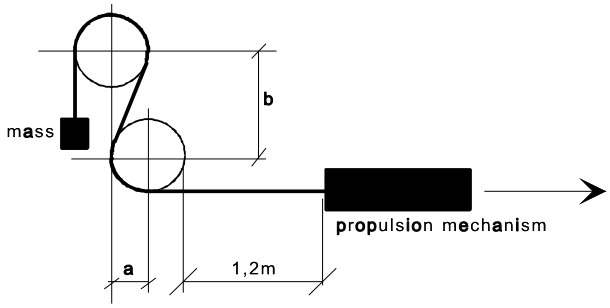

(Where: a = 102 mm; b= 241 mm)

The testing machine (Figure 3) shall consist of a steel frame, provided with two wooden wheels, with a rim width of approximately 130 mm.

The circumference of the wheels shall be grooved for the guidance of the hose.

The radius of the wheels, measured to the bottom of the groove, shall be 102 mm.

The longitudinal median planes of both wheels shall be in the same vertical plane. The distance between the wheel-centres shall be vertical 241 mm and horizontal 102 mm.

Each wheel shall be able to rotate freely round its pivot-centre.

A propulsion-mechanism pulls the hose over the wheels at a speed of four complete motions per minute.

3.5.4.3. The hose shall be S-shape-like installed over the wheels (see Figure 3).

The end that runs over the upper wheel shall be furnished with a sufficient mass as to achieve a complete snuggling of the hose against the wheels. The part that runs over the lower wheel is attached to the propulsion mechanism.

The mechanism shall be so adjusted, that the hose travels a total distance of 1.2 m in both directions.

3.6. Markings

3.6.1. Every hose shall bear, at intervals of not greater than 0.5 m, the following clearly legible and indelible identification markings consisting of characters, figures or symbols.

3.6.1.1. The trade name or mark of the manufacturer.

3.6.1.2. The year and month of fabrication.

3.6.1.3. The size and type marking.

3.6.1.4. The identification marking "CNG Class 2".

3.6.2. Every coupling shall bear the trade name or mark of the assembling manufacturer.

4. LNG hoses, Class 5 classification

4.1. General specifications

4.1.1. The hose shall be so designed as to withstand a maximum working pressure of 1.5 times the working pressure (MPa) declared by the manufacturer.

4.1.2. The hose shall be so designed as to withstand temperatures as specified in Annex 5O for Class 5.

4.1.3. The inside diameter shall be in compliance with Table 1 of standard ISO 1307.

4.2. Hose construction

4.2.1. The hose shall be able to withstand temperatures of Class 5.

4.2.2. The reinforcing interlayer(s) has (have) to be protected by a cover against corrosion.

If for the reinforcing interlayer(s) corrosion-resistant-material is used (i.e. stainless steel) a cover is not required.

4.2.3. The lining and the cover shall be smooth and free from pores, holes and strange elements.

An intentionally provided puncture in the cover shall not be considered as an imperfection.

4.2.4. The cover has to be intentionally perforated to avoid the forming of bubbles.

4.2.5. When the cover is punctured and the interlayer is made of a non-corrosion-resistant material, the interlayer has to be protected against corrosion.

4.3. Specifications and tests for the lining

4.3.1. Tensile strength and elongation for thermoplastic elastomers (TPE)

4.3.1.1. Tensile strength and elongation at break according to ISO 37. Tensile strength not less than 20 MPa and elongation at break not less than 250 per cent.

4.3.1.2. Resistance to n-pentane according to ISO 1817 with the following conditions:

(a) Medium: n-pentane;

(b) Temperature: 23 °C (tolerance according to ISO 1817);

(c) Immersion period: 72 hours.

Requirements:

(a) Maximum change in volume 20 per cent;

(b) Maximum change in tensile strength 25 per cent;

(c) Maximum change in elongation at break 30 per cent.

After storage in air with a temperature of 40 °C for a period of 48 hours the mass compared to the original value may not decrease more than 5 per cent.

4.3.1.3. Resistance to ageing according to ISO 188 with the following conditions:

(a) Temperature: 115 °C (test temperature = maximum operating temperature minus 10 °C);

(b) Exposure period: 24 and 336 hours.

After ageing the specimens have to be conditioned at 23 °C and 50 per cent relative humidity for at least 21 days prior to carrying out the tensile test according to paragraph 4.3.1.1. of this annex.

Requirements:

(a) Maximum change in tensile strength 35 per cent after 336 hours ageing compared to the tensile strength of the 24 hours aged material;

(b) Maximum change in elongation at break 25 per cent after 336 hours ageing compared to the elongation at break of the 24 hours aged material.

4.3.2. Tensile strength and elongation specific for thermoplastic material.

4.3.2.1. Tensile strength and elongation at break according to ISO 527-2 with the following conditions:

(a) Specimen type: type 1 BA;

(b) Tensile speed: 20 mm/minute.

The material has to be conditioned for at least 21 days at 23 °C and 50 per cent relative humidity prior to testing.

Requirements:

(a) Tensile strength not less than 20 MPa;

(b) Elongation at break not less than 100 per cent.

4.3.2.2. Resistance to n-pentane according to ISO 1817 with the following conditions:

(a) Medium: n-pentane;

(b) Temperature: 23 °C (tolerance according to ISO 1817);

(c) Immersion period: 72 hours.

Requirements:

(a) Maximum change in volume 2 per cent;

(b) Maximum change in tensile strength 10 per cent;

(c) Maximum change in elongation at break 10 per cent.

After storage in air with a temperature of 40 °C for a period of 48 hours the mass compared to the original value may not decrease more than 5 per cent.

4.3.2.3. Resistance to ageing according to ISO 188 with the following conditions:

(a) Temperature: 115 °C (test temperature = maximum operating temperature minus 10 °C);

(b) Exposure period: 24 and 336 hours.

After ageing the specimens have to be conditioned at 23 °C and 50 per cent relative humidity for at least 21 days prior to carrying out the tensile test according to paragraph 4.3.2.1. of this annex.

Requirements:

(a) Maximum change in tensile strength 35 per cent after 336 hours ageing compared to the tensile strength of the 24 hours aged material;

(b) Maximum change in elongation at break 25 per cent after 336 hours ageing compared to the elongation at break of the 24 hours aged material.

4.4. Specifications and test-method for the cover

4.4.1. Tensile strength and elongation for thermoplastic elastomers (TPE)

4.4.1.1. Tensile strength and elongation at break according to ISO 37. Tensile strength not less than 10 MPa and elongation at break not less than 250 per cent.

4.4.1.2. Resistance to n-hexane according to ISO 1817 with the following conditions:

(a) Medium: n-hexane;

(b) Temperature: 23 °C (tolerance acc.to ISO 1817);

(c) Immersion period: 72 hours.

Requirements:

(a) Maximum change in volume 30 per cent;

(b) Maximum change in tensile strength 35 per cent;

(c) Maximum change in elongation at break 35 per cent.

4.4.1.3. Resistance to ageing according to ISO 188 with the following conditions:

(a) Temperature: 115 °C (test temperature = maximum operating temperature minus 10 °C);

(b) Exposure period: 24 and 336 hours.

After ageing the specimens have to be conditioned at 23 °C and 50 per cent relative humidity for at least 21 days prior to carrying out the tensile test according to paragraph 4.4.1.1. of this annex.

Requirements:

(a) Maximum change in tensile strength 35 per cent after 336 hours ageing compared to the tensile strength of the 24 hours aged material;

(b) Maximum change in elongation at break 25 per cent after 336 hours ageing compared to the elongation at break of the 24 hours aged material.

4.4.2. Tensile strength and elongation specific for thermoplastic material.

4.4.2.1. Tensile strength and elongation at break according to ISO 527-2 with the following conditions:

(a) Specimen type: type 1 BA;

(b) Tensile speed: 20 mm/minute.

The material has to be conditioned for at least 21 days at 23 °C and 50 per cent relative humidity prior to testing.

Requirements:

(a) Tensile strength not less than 20 MPa;

(b) Elongation at break not less than 100 per cent.

4.4.2.2. Resistance to n-hexane according to ISO 1817 with the following conditions:

(a) Medium: n-hexane;

(b) Temperature: 23 °C (tolerance according to ISO 1817);

(c) Immersion period: 72 hours.

Requirements:

(a) Maximum change in volume 2 per cent;

(b) Maximum change in tensile strength 10 per cent;

(c) Maximum change in elongation at break 10 per cent.

After storage in air with a temperature of 40 °C for a period of 48 hours the mass compared to the original value may not decrease more than 5 per cent.

4.4.2.3. Resistance to ageing according to ISO 188 with the following conditions:

(a) Temperature: 115 °C (test temperature = maximum operating temperature minus 10 °C);

(b) Exposure period: 24 and 336 hours.

After ageing the specimens have to be conditioned at 23 °C and 50 per cent relative humidity for at least 21 days prior to carrying out the tensile test according to paragraph 4.4.2.1. of this annex.

Requirements:

(a) Maximum change in tensile strength 20 per cent after 336 hours ageing compared to the tensile strength of the 24 hours aged material;

(b) Maximum change in elongation at break 50 per cent after 336 hours ageing compared to the elongation at break of the 24 hours aged material.

4.4.3. Resistance to ozone

4.4.3.1. The test has to be performed in compliance with standard ISO 1431/1.

4.4.3.2. The test-pieces, which have to be stretched to an elongation of 20 per cent shall have to be exposed to air of 40 °C with an ozone concentration of 50 parts per hundred million during 120 hours.

4.4.3.3. No cracking of the test pieces is allowed.

4.5. Specifications for uncoupled hose

4.5.1. Gas-tightness (permeability)

4.5.1.1. A hose at a free length of 1 m has to be connected to a container filled with liquid propane, having a temperature of 23 °C ± 2 °C.

4.5.1.2. The test has to be carried out in compliance with the method described in standard ISO 4080.

4.5.1.3. The leakage through the wall of the hose shall not exceed 95 cm^3 per metre of hose per 24 hours.

4.5.2. Resistance at low temperature

4.5.2.1. The test has to be carried out in compliance with the method described in standard ISO 4672-1978, method B.

4.5.2.2. Test temperature: -163 °C (equivalent can be found in the table of Annex 5O)

4.5.2.3. No cracking or rupture is allowed.

4.5.3. Bending test

4.5.3.1. The test has to be carried out in compliance with the method described in standard ISO15500-17:2012

4.5.4. Hydraulic test pressure and appointment of the minimum burst-pressure

4.5.4.1. The test has to be carried out in compliance with the method described in standard ISO 1402.

Test temperature: -163 °C (equivalent can be found in the table of Annex 5O)

4.5.4.2. The test pressure of 1.5 times the manufacture declared working pressure (MPa) shall be applied during 10 minutes, without any leakage.

4.5.4.3. The burst pressure shall not be less than 2.25 times the manufacture declared working pressure (MPa).

4.5.5 Pull off

4.5.5.1 The test has to be carried out in compliance with the method described in standard ISO15500-17:2012.

4.5.6. Electrical conductivity

4.5.6.1. The test has to be carried out in compliance with the method described in standard ISO15500-17:2012.

4.5.7. Vibration

4.5.7.1. Mount one end of the test assembly on the static support and the other end on the vibration head, making sure that the tubing is bent at the minimum bending radius of 180° preventing the hose to kink.

Using cryogenic fluid, pressurize the test sample at the manufacture declared working pressure.

Test temperature: -163 °C (equivalent can be found in the table of Annex 5O).

Vibrate the component for 30 minutes, pressurized, and sealed at the downstream side along each of the three orthogonal axes at the most severe resonant frequency determined as follows:

(a) By an acceleration of 1.5 g;

(b) Within a sinusoidal frequency range of 10 Hz to 500 Hz;

(c) With a sweep time of 10 minutes.

If the resonance frequency is not found in this range, the test shall be conducted at 500 Hz.

On completion of the test, hose shall not show any indication of fatigue, cracks, or damage and shall be tested at a test pressure of 1.5 times the manufacture declared working pressure (MPa). This pressure shall be applied for 10 minutes, without any leakage.

4.6. Couplings

4.6.1. The couplings shall be made from austenitic stainless steel.

4.6.2. The couplings shall meet requirements in paragraph 4.7. below.

4.7. Assembly of hose and couplings

4.7.1. The construction of the couplings shall be such, that it is not necessary to peel the cover unless the reinforcement of the hose consists of corrosion-resistant material.

4.7.2. The hose assembly has to be subjected to an impulse test in compliance with standard ISO 1436.

Test temperature: -163 °C (equivalent can be found in the table of Annex 5O).

4.7.2.1. The test has to be completed with a cryogenic fluid at the temperature mentioned in Annex 5O for Class 5 and at a minimum pressure of the manufacture declared working pressure.

4.7.2.2. The hose has to be subjected to 7,000 impulses.

4.7.2.3. After the impulse-test the hose has to withstand the test pressure as mentioned in paragraph 4.5.4.2. above.

4.7.3. Gas-tightness

4.7.3.1. The hose assembly (hose with couplings) has to withstand during five minutes a gas pressure of 1.5 times the working pressure (MPa) without any leakage at cryogenic temperature.

Test temperature: -163 °C (equivalent can be found in the table of Annex 5O).

4.8. Markings

4.8.1. Every hose shall bear, at intervals of not greater than 0.5 m, the following clearly legible and indelible identification markings consisting of characters, figures or symbols.

4.8.1.1. The trade name or mark of the manufacturer.

4.8.1.2. The year and month of fabrication.

4.8.1.3. The size and type-marking.

4.8.1.4. The identification-marking "LNG Class 5".

4.8.2. Every coupling shall bear the trade name or mark of the assembling manufacturer.

Annex 4C

Provisions on the approval of the CNG filter

1. The purpose of this annex is to determine the provisions on the approval of the CNG filter.

2. Operating conditions

2.1. The CNG filter shall be so designed to operate at temperatures as specified in Annex 5O.

2.2. CNG filter shall be classified with regard to the maximum working pressure (see Figure 1-1 paragraph 3. of this Regulation):

2.2.1. Class 0: The CNG filter shall be so designed to withstand a pressure of 1.5 times the working pressure (MPa).

2.2.2. Class 1 and Class 2: The CNG filter shall be so designed to withstand a pressure twice the working pressure.

2.2.3. Class 3: the CNG filter shall be so designed to withstand a pressure twice the relief pressure of the pressure relief valve on which it is subject.

2.3. The materials used in the CNG filter which are in contact with CNG when operating, shall be compatible with this gas (see Annex 5D).

2.4. The component has to comply with the test procedures for Class components according to the scheme in Figure 1-1 of paragraph 3. of this Regulation.

Annex 4D

Provisions on the approval of the CNG pressure regulator

1. The purpose of this annex is to determine the provisions on the approval of the pressure regulator.

2. CNG Pressure regulator

2.1. The material constituting the regulator which is in contact with the compressed natural gas when operating shall be compatible with the test CNG. In order to verify this compatibility, the procedure in Annex 5D shall be used.

2.2. The materials constituting the regulator which are in contact with the heat exchange medium of the regulator when operating, shall be compatible with that fluid.

2.3. The component shall comply with the test procedures provided for in Class 0 for the parts subject to high pressure and Classes 1, 2, 3 and 4 for the parts subject to medium and low pressure.

2.4. Durability test (continued operation) of the CNG pressure regulator:

The regulator shall be able to withstand 50,000 cycles without any failure when tested according to the following procedure. Where the stages of pressure regulation are separate, the service pressure in subparagraphs (a) to (f) is considered to be the working pressure of the upstream stage.

(a) Recycle the regulator for 95 per cent of the total number of cycles at room temperature and at the service pressure. Each cycle shall consist of flow until stable outlet pressure has been obtained, after which the gas flow shall be shut off by a downstream valve within 1 s, until the downstream lock-up pressure has stabilized. Stabilized outlet pressures are defined as set pressure ±15 per cent for at least 5 s.

(b) Cycle the inlet pressure of the regulator for 1 per cent of the total number of cycles at room temperature from 100 per cent to 50 per cent of the service pressure. The duration of each cycle shall be no less than 10 s.

(c) Repeat the cycling procedure of (a) at 120 °C at the service pressure for 1 per cent of the total number of cycles.

(d) Repeat the cycling procedure of (b) at 120 °C at the service pressure for 1 per cent of the total number of cycles.

(e) Repeat the cycling procedure of (a) at -40 °C or -20 °C as applicable and 50 per cent of service pressure for 1 per cent of the total number of cycles.

(f) Repeat the cycling procedure of (b) at -40 °C or -20 °C as applicable and 50 per cent of service pressure for 1 per cent of the total number of cycles.

(g) At the completion of all tests indicated in subparagraphs (a), (b), (c), (d), (e) and (f), the regulator shall be leak proof (see Annex 5B) at the temperatures of -40 °C or -20 °C, as applicable, and at the room temperature and at the temperature of +120 °C.

3. Classification and test pressures

3.1. The part of the pressure regulator which is in contact with the pressure of the container is regarded as Class 0.

3.1.1. The Class 0 part of the pressure regulator shall be leak-proof (see Annex 5B) at a pressure up to 1.5 times the working pressure (MPa) with the outlet(s) of that part closed off.

3.1.2. The Class 0 part of the pressure regulator shall withstand a pressure up to 1.5 times the working pressure (MPa).

3.1.3. The Class 1 and Class 2 part of the CNG pressure regulator shall be leak-proof (see Annex 5B) at a pressure up to twice the working pressure.

3.1.4. The Class 1 and Class 2 part of the CNG pressure regulator shall withstand a pressure up to twice the working pressure.

3.1.5. The Class 3 part of the CNG pressure regulator shall withstand a pressure up to twice the relief pressure of the pressure relief valve, on which it is subject.

3.2. The pressure regulator shall be so designed to operate at temperatures as specified in Annex 5O.

Annex 4E

Provisions on the approval of the CNG pressure and temperature sensors

1. The purpose of this annex is to determine the provisions on the approval of the CNG pressure and temperature sensors.

2. CNG Pressure and temperature sensors

2.1. The material constituting the pressure and temperature sensors which is in contact with the CNG when operating shall be compatible with the test CNG. In order to verify this compatibility, the procedure in Annex 5D shall be used.

2.2. The CNG pressure and temperature sensors are classified in a Class according to the scheme 1-1 in paragraph 3. of this Regulation.

3. Classification and test pressures

3.1. The part of the CNG pressure and temperature sensors which is in contact with the pressure of the container is regarded as Class 0.

3.1.1. The Class 0 part of the CNG pressure and temperature sensors shall be leak-proof at a pressure up to 1.5 times the working pressure (MPa) (see Annex 5B).

3.1.2. The Class 0 part of the CNG pressure and temperature sensors shall withstand a pressure up to 1.5 times the working pressure (MPa).

3.1.3. The Class 1 and Class 2 part of the CNG pressure and temperature sensors shall be leak-proof at a pressure up to twice the working pressure (see Annex 5B).

3.1.4. The Class 1 and Class 2 part of the CNG pressure and temperature sensors shall withstand a pressure up to twice the working pressure.

3.1.5. The Class 3 part of the CNG pressure and temperature sensors shall withstand a pressure up to twice the relief pressure of the pressure relief valve, on which it is subject.

3.2. The CNG pressure and temperature sensors shall be so designed to operate at temperatures as specified in Annex 5O.

3.3. The electrical system, if existing, shall be isolated from the body of the pressure and temperature sensors. Isolation resistance shall be > 10 MΩ.

Annex 4F

Provisions on the approval of the CNG filling unit (Receptacle)

1. The purpose of this annex is to determine the provisions on the approval of the CNG filling unit.

2. The CNG filling unit

2.1. The CNG filling unit shall comply with the requirements laid down in paragraph 3. below and shall have the dimensions of paragraph 4. Below.

2.2. CNG filling units designed in accordance with ISO 14469-1 first edition 2004-11-01[1] or ISO 14469-2:2007[2] and meeting all the requirements therein are deemed to fulfill the requirements of paragraphs 3. and 4. of this annex.

3. The CNG filling unit test procedures

3.1. The CNG filling unit shall be conform to the requirements of Class 0 and follow the test procedures in Annex 5 with the following specific requirements.

3.2. The material constituting the CNG filling unit which is in contact with the CNG when the device is in service shall be compatible with the CNG. In order to verify this compatibility, the procedure of Annex 5D shall be used.

3.3. The CNG filling unit shall be free from leakage at a pressure of 1.5 times the working pressure (MPa) (see Annex 5B).

3.4. The CNG filling unit shall withstand a pressure of 33 MPa.

3.5. The CNG filling unit shall be so designed as to operate at temperatures as specified in Annex 5O.

3.6. The CNG filling unit shall withstand a number of 10,000 cycles in the durability test specified in Annex 5L.

4. CNG filling unit dimensions

4.1. Figure 1 shows the dimensions of the filling unit for vehicles of categories M_1 and N_1.[3]

4.2. Figure 2 shows the dimensions of the filling unit for vehicles of categories M_2, M_3, N_2 and N_3.[3]

[1] Road Vehicles — Compressed Natural Gas (CNG) refuelling connector - Part 1: 20 MPa (200 bar) connector.

[2] Road vehicles — Compressed natural gas (CNG) refuelling connector — Part 2: 20 MPa (200 bar) connector, size 2.

[3] As defined in the Consolidated Resolution on the Construction of Vehicles (R.E.3.), document ECE/TRANS/WP.29/78/Rev.3, para. 2. – www.unece.org/trans/main/wp29/wp29wgs/wp29gen/wp29resolutions.html

4.3. This annex refers to receptacles designed for 20 MPa (200 bar) CNG storage systems. Receptacles for 25 MPa (250 bar) are acceptable, provided all other requirements of this annex are met at increased pressures as defined in paragraph 1. of Annex 3A to this Regulation.

In this case, dimensions:

25 +0/-0.1 becomes 24 +0/-0.1 in Figure 1, and

35 +0/-0.1 becomes 34+0/-0.1 in Figure 2.

Figure 1
20 MPa filling unit (receptacle) for M_1 and N_1 vehicles

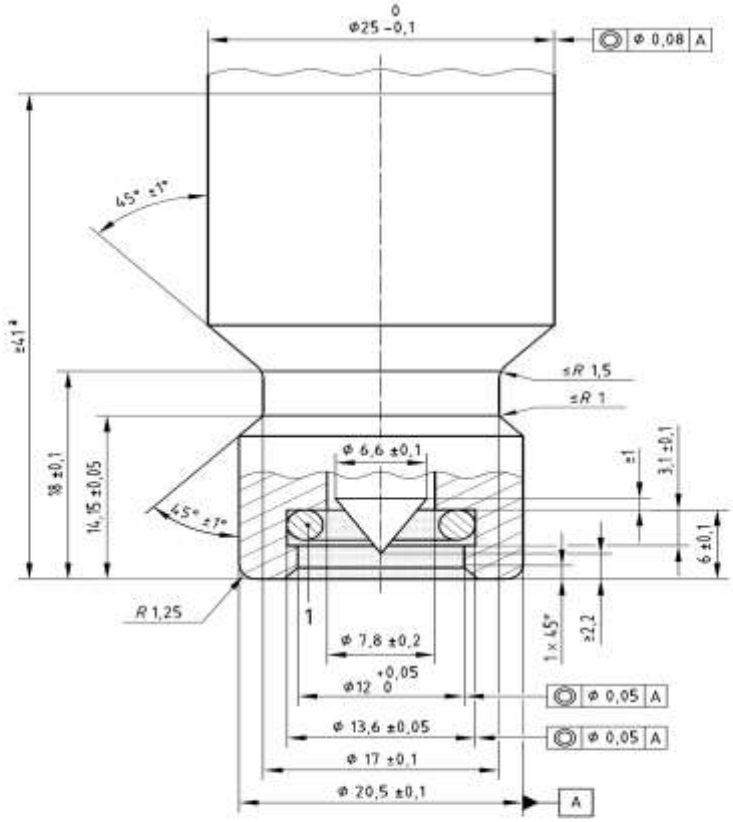

Key

This area shall be kept free of all components.

1 Sealing surface equivalent to No. 110 O-ring of dimensions:
9.19 mm ± 0.127 mm ID
2.62 mm ± 0.076 mm width

Dimensions in millimetres
Surface roughness < Ra 3.2 µm

Sealing surface finish: 0.8 µm to 0.05 µm
Material hardness: 75 Rockwell (HRB 75) minimum

a Minimum length of the receptacle which is clear of provisions for attachement of receptacle or protective caps.

Figure 2
20 MPa Filling unit Size 2 (receptacle) for M_2, M_3, N_2 and N_3 vehicles

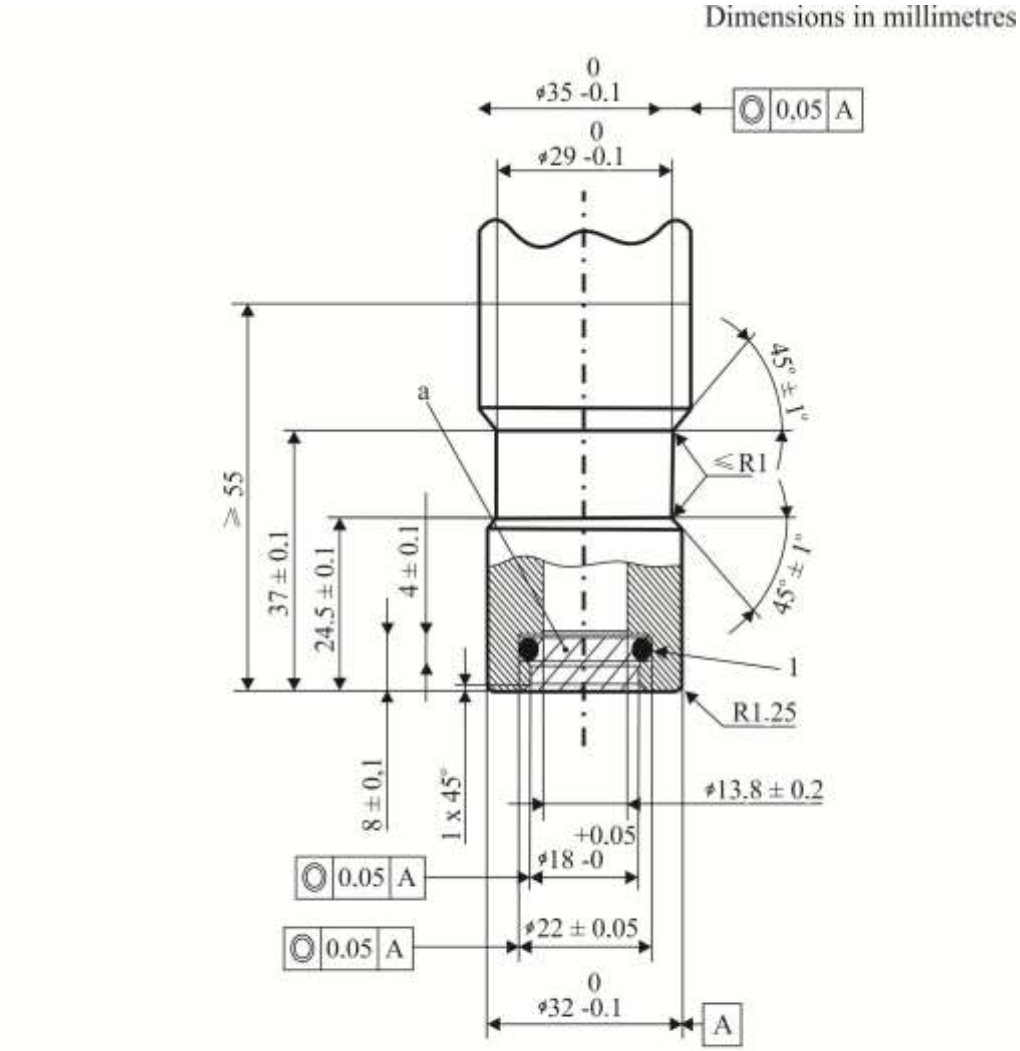

Key

1 sealingID = ø15.47 ± 0.1 width = ø3.53 ± 0.2
a This area shall be kept free of all components

Surface roughness < Ra 3.2 µm
Sealing surface finish: 0.8 µm to 0.05 µm.
Material hardness: 75 Rockwell B (HRB 75) minimum.

Annex 4G

Provisions on the approval of CNG gas flow adjuster and gas/air mixer, gas injector or fuel rail

1. The purpose of this annex is to determine the provisions on the approval of the CNG gas flow adjuster and gas/air mixer, gas injector or fuel rail.

2. CNG gas/air mixer, gas injector or fuel rail.

2.1. The material constituting the CNG gas/air mixer, gas injector or fuel rail which is in contact with CNG shall be compatible with the CNG. In order to verify this compatibility, the procedure specified in Annex 5D shall be used.

2.2. The CNG gas/air mixer, gas injector or fuel rail shall conform to the requirements of Class 1 or 2 components, according to their classification.

2.3. Test pressures

2.3.1. The CNG gas/air mixer, gas injector or fuel rail of Class 2 shall withstand a pressure twice the working pressure.

2.3.1.1. The CNG gas/air mixer, gas injector or fuel rail of Class 2 shall be free from leakage at a pressure twice the working pressure.

2.3.2. The CNG gas/air mixer, gas injector or fuel rail of Class 1 and Class 2 shall be so designed to operate at temperatures as specified in Annex 5O.

2.4. Electrical operated components containing CNG shall comply with the following:

(a) They shall have a separate ground connection;

(b) The electrical system of the component shall be isolated from the body;

(c) The gas injector shall be in closed position when the electric current is switched off.

3. CNG gas flow adjuster

3.1. The material constituting the gas flow adjuster which is in contact with the CNG shall be compatible with the CNG. In order to verify this compatibility the procedure specified in Annex 5D has to be used.

3.2. The CNG gas flow adjuster shall conform to requirements of Class 1 or 2 components, according to their classification.

3.3. Test pressures

3.3.1. The CNG gas flow adjuster of Class 2 shall withstand a pressure twice the working pressure.

3.3.1.1. The CNG gas flow adjuster of Class 2 shall be free from leakage at a pressure twice the working pressure.

3.3.2. The CNG gas flow adjuster of Class 1 and Class 2 shall be so designed to operate at temperatures as specified in Annex 5O.

3.4. Electrical operated components containing CNG shall comply with the following:

(a) They shall have a separate ground connection;

(b) The electrical system of the component shall be isolated from the body.

Annex 4H

Provisions on the approval of the electronic control unit

1. The purpose of this annex is to determine the provisions on the approval of the electronic control unit.

2. Electronic control unit

2.1. The electronic control unit can be any device which controls the CNG/LNG demand of the engine and establishes the cut-off of the automatic valve in case of a broken fuel supply pipe or in case of stalling of the engine, or during a crash.

2.2. The switching off delay of the automatic valve after stalling of the engine may not be more than 5 seconds.

2.3. The device may be equipped with an automatic ignition advance timing adjuster integrated in the electronic module or separated.

2.4. The device may be integrated with dummy injectors to permit a correct functioning of the gasoline electronic control unit during CNG/LNG operation.

2.5. The electronic control unit shall be so designed to operate at temperatures as specified in Annex 5O.

Annex 4I

Provisions on the approval of the LNG heat exchanger – vaporizer

1. The purpose of this annex is to determine the provisions on the approval of the LNG heat exchanger – vaporizer.

2. LNG Heat exchanger – vaporizer

2.1. The LNG heat exchanger – vaporizer can be any device made for vaporizing the cryogenic liquid fuel and deliver it as gas to the engine with gas temperature between -40 °C and +105 °C.

2.2. The material constituting the LNG heat exchanger - vaporizer which is in contact with the CNG when operating shall be compatible with the test CNG. In order to verify this compatibility, the procedure in Annex 5D shall be used.

2.3. The part of the LNG heat exchanger - vaporizer which is in contact with the tank is regarded as Class 5.

2.4. The LNG heat exchanger – vaporizer shall be so designed as to withstand a pressure of 1.5 times the working pressure (MPa) without leakage and deformation.

2.5. The LNG heat exchanger – vaporizer shall be so designed as to be leak-proof (external) at a pressure of 1.5 times the working pressure (MPa) (see Annex 5B).

2.6. The LNG heat exchanger – vaporizer shall be so designed to operate at temperatures as specified in Annex 5O.

2.7. The LNG heat exchanger – vaporizer has to comply with the test procedures for the Class 5.

2.8. The LNG heat exchanger – vaporizer has to comply with the water jacket freezing test. Fill the part of the heat exchanger-vaporizer which normally contains an antifreeze solution, with water to normal capacity and expose it at -40 °C for 24 hours. Attach 1 m sections of coolant hose to the coolant inlet and outlet of the heat exchanger – vaporizer. Following the freezing conditioning, conduct an external leakage test according to Annex 5B at room temperature. A separate sample may be used for this test.

Annex 4J

Provisions on the approval of the LNG filling receptacle

1. The purpose of this annex is to determine the provisions on the approval of the LNG filling receptacle.

2. LNG filling receptacle

2.1. The LNG filling receptacle shall comply with the requirements of paragraph 3.

2.2. The manufacturer of the receptacle may require a specific LNG nozzle type to be used.

3. The LNG filling receptacle test procedures

3.1. The LNG filling receptacle shall conform to the requirements of Class 5 and follow the test procedures in Annex 5 with the following specific requirements:

3.1.1. The non-metallic material constituting the LNG filling receptacle shall be compatible with LNG. The procedure of Annexes 5D, 5F and 5G shall be used to verify this compatibility.

3.1.2. The LNG filling receptacle shall be free from leakage at a pressure of 1.5 times the working pressure (MPa) (see Annex 5B).

3.1.3. The LNG filling receptacle shall be designed as to operate at temperatures as specified in Annex 5O.

3.1.4. The filling unit shall withstand 7,000 cycles in the durability in Annex 5L, as follows:

3.1.4.1. Low temperature cycling

The component shall be connected for 96 per cent of the total cycles at cryogenic temperature and at rated service pressure. The source can be liquid or gaseous nitrogen (or LNG) at or below the temperature corresponding to LNG rated service pressure (see table in Annex 5O). Flow should be established, and then shut off. During the off cycle, the downstream pressure of the test fixture should be allowed to decay to 50 per cent of the test pressure. On completion of the cycles, the components shall comply with the leakage test of Annex 5B at cryogenic temperature. It is allowed to interrupt this part of the test at 20 per cent intervals for leakage testing.

3.1.4.2. Room temperature cycling

The component shall be operated through 2 per cent of the total cycles as above at the appropriate room temperature specified at rated service pressure. The component shall comply with the leakage test of Annex 5B at the room temperature at the completion of the room temperature cycles.

3.1.4.3. High temperature cycling

The component shall be operated through 2 per cent of the total cycles as above at the appropriate maximum temperature specified at rated service pressure. The component shall comply with the leakage test of Annex 5B at the high temperature at the completion of the high temperature cycles.

Following cycling and leakage re-test the component shall be capable of remove of the filling nozzle without spilling more than 30 cm^3 LNG.

3.1.5. The LNG filling receptacle shall be made out of non-sparking material and should comply with the no igniting evaluation tests described in ISO 14469-1:2004.

3.1.6. The electrical resistance of the connected LNG filling receptacle and nozzle shall be not be greater than 10 Ω either in the pressurized and un-pressurized state. Test shall be conducted prior to and after the endurance test.

Annex 4K

Provisions on the approval of the LNG pressure control regulator

1. Scope

The purpose of this annex is to determine the provisions on the approval of the LNG pressure control regulator.

2. LNG pressure control regulator

2.1. The material constituting the regulator which is in contact with the LNG when operating shall be compatible with the test LNG. In order to verify this compatibility, the procedure in Annex 5D shall be used.

2.2. The LNG pressure control regulator shall comply with the tests mentioned for Class 5.

3. Classification and test pressures

3.1. The pressure regulator that is in contact with the pressure of the LNG is regarded as Class 5.

3.1.1. The pressure control regulator shall be leak proof (see Annex 5B) with the outlet (s) of that part closed off.

3.2. The pressure regulator shall be so designed to operate at temperatures as specified in Annex 5O.

3.3. Durability test

3.3.1. Perform the durability test mentioned in Annex 5L with the following exceptions:

(a) The number of cycles is 7,000;

(b) The component shall be connected to a source of pressurized cryogenic fluid.

Annex 4L

Provisions on the approval of LNG pressure and/or temperature sensor

1. The purpose of this annex is to determine the provisions on the approval of the LNG pressure and/or temperature sensor.

2. LNG pressure and temperature sensors.

2.1. The LNG pressure and temperature sensors are classified in Class 5 according to the scheme 1-1 in paragraph 3. of this Regulation.

3. The LNG pressure and/or temperature sensor test procedures.

3.1. The LNG pressure and/or temperature sensor test procedures shall be conform to the requirements of Class 5 and follow the test procedures in Annex 5 with the following specific requirements.

3.2. Insulation resistance test.

This test is designed to check for a potential failure of the insulation between the LNG pressure and/or temperature sensor connection pins and the housing.

Apply 1,000 V DC between one of the connector pins and the housing of the LNG pressure and/or temperature sensor for at least 2 seconds. The minimum allowable resistance shall be > 10 MΩ.

3.3. The material constituting the LNG pressure and temperature sensors witch is in contact with the LNG when operating shall be compatible with the test LNG. In order to verify this compatibility, the procedure in Annex 5D shall be used.

3.4. The LNG pressure and/or temperature sensor shall be so designed as to operate at temperatures as specified in Annex 5O.

3.5. The Class 5 part of the LNG pressure and temperature sensors shall withstand a pressure up to 1.5 times the working pressure (MPa), at the temperature corresponding to rated service pressure from the table in Annex 5O, at room temperature and at the maximum temperature from Annex 5O.

Annex 4M

Provisions on the approval of the natural gas detector

1. The purpose of this annex is to determine the provisions on the approval of the natural gas detector.

2. Natural gas detector

The material constituting the natural gas detector which is in contact with the natural gas when operating shall be compatible with the test gas. In order to verify this compatibility, the procedure in Annex 5D shall be used.

3. The natural gas detector test procedures

3.1. The natural gas detector shall be so designed as to operate at temperatures as specified in Annex 5O.

3.2. Insulation resistance test

This test is designed to check for a potential failure of the insulation between the connection pins and the housing of the natural gas detector.

Apply 1,000 V DC between one of the connector pins and the housing of the natural gas detector for at least 2 seconds. The minimum allowable resistance shall be 10 MΩ.

3.3. The natural gas detector shall comply with relevant electromagnetic compatibility (EMC) requirements according to Regulation No. 10, 03 series of amendments, or equivalent.

Annex 4N

Provisions on the approval of the automatic valve, check valve, pressure relief valve, excess flow valve, manual valve and non-return valve for LNG applications.

1. The purpose of this annex is to determine the provisions on the approval of the automatic valve, the check valve, the pressure relief valve and the excess flow valve only for LNG applications.

2. The LNG automatic valve

2.1. The materials constituting the LNG automatic valve, which are in contact with the LNG when operating, shall be compatible with the test LNG. In order to verify this compatibility the procedure described in Annex 5D shall be used.

2.2. Operating specifications

2.2.1. The LNG automatic valve shall be so designed as to withstand a pressure of 1.5 times the working pressure (MPa) without leakage or deformation (see Annex 5A).

2.2.2. The LNG automatic valve shall be so designed as to be leak-proof at a pressure of 1.5 times the working pressure (MPa) (see Annex 5B).

2.2.3. The LNG automatic valve, being in the normal position of use specified by the manufacturer, is submitted to 7,000 operations; then it is deactivated. The automatic valve shall remain leak-proof according to Annex 5B and 5C at a pressure of 1.5 times the working pressure. This test is performed for 96 per cent of its cycles at cryogenic temperatures, 2 per cent at ambient temperature and 2 per cent at high temperature according to the table in Annex 5O.

2.2.4. The LNG automatic valve shall be so designed to operate at temperatures as specified in Annex 5O.

2.2.5. The insulation resistance test.

This test is designed to check for a potential failure of the insulation between the two-pin coil assembly and the LNG automatic valve casing.

Apply 1,000 V DC between one of the connector pins and the housing of the automatic valve for at least 2 seconds. The minimum allowable resistance shall be 10 MΩ.

3. The LNG check valve

3.1. The materials constituting the LNG check valve which are in contact with the LNG when operating, shall be compatible with the test LNG. In order to verify this compatibility the procedure described in Annex 5D shall be used.

3.2. Operating specifications

3.2.1. The LNG check valve shall be so designed as to withstand a pressure of 1.5 times the working pressure (MPa) without leakage and deformation at cryogenic temperature.

3.2.2. The LNG check valve shall be so designed as to be leak-proof (external) at a pressure of 1.5 times the working pressure (MPa) (see Annex 5B) with the temperatures given in Annex 5O.

3.2.3. The LNG check valve, being in the normal position of use specified by the manufacturer, is submitted to 7,000 operations at cryogenic temperature (see Annex 5O); then it is deactivated. The check valve shall remain leak-proof (external) at a pressure of 1.5 times the working pressure (MPa) (see Annex 5B).

3.2.4. The LNG check valve shall be so designed to operate at temperatures as specified in Annex 5O.

3.3. The LNG check valve has to comply with the test procedures for the Class 5 component.

4. The LNG pressure relief valve

4.1. The materials constituting the pressure relief valve which are in contact with the LNG when operating, shall be compatible with the test LNG. In order to verify this compatibility, the procedure described in Annex 5D shall be used.

4.2. Operating specifications

4.2.1. The LNG pressure relief valve in Class 5 shall be so designed as to withstand a pressure of 1.5 times the working pressure (MPa) at cryogenic temperature with the outlet closed off.

4.2.2. The pressure relief valve and pressure relief device of Class 5 shall be so designed as to be leak-proof at a pressure of 1.5 times the working pressure (MPa) with the outlet closed off (see Annex 5B).

4.3. The LNG pressure relief valve shall be so designed to operate at temperatures as specified in Annex 5O.

4.4. The LNG pressure relief valve has to comply with the test procedures for the Class 5 component.

5. The LNG excess flow valve

5.1. The materials constituting the LNG excess flow valve, which are in contact with the LNG when operating, shall be compatible with the test LNG. In order to verify this compatibility, the procedure described in Annex 5D shall be used.

5.2. Operating specifications

5.2.1. The LNG excess flow valve, if it is not mounted inside the tank, shall be so designed as to withstand a pressure of 1.5 times the working pressure (MPa) at cryogenic temperature.

5.2.2. The LNG excess flow valve shall, if it is not mounted inside the tank, be so designed as to be external leak-proof (Annex 5B) at a pressure of 1.5 times the working pressure (MPa).

5.2.3. The LNG excess flow valve shall be so designed to operate at temperatures as specified in Annex 5O.

5.3. The LNG excess flow valve shall be designed with a bypass (internal leak) to allow for equalization of pressures.

5.4. An excess flow valve shall operate at not more than 10 per cent above, nor less than 20 per cent below the rated closing mass flow capacity specified by the manufacturer.

5.4.1. Three samples of each size and style of valve are to be subjected to these tests. The LNG valve intended for use only with liquid is to be tested with water. Except as indicated in paragraph 5.4.3. below, separate tests are to be run with each sample installed in vertical, horizontal and inverted positions.

5.4.2. The test with water is to be conducted using a liquid flow meter (or equivalent) installed in a piping system having sufficient pressure to provide the required flow.

The system is to include an inlet piezometer or pipe at least one pipe size larger than the valve to be tested, with a flow control valve connected between the flow meter and piezometer. A hose or hydrostatic relief valve, or both, may be used to reduce the effect of the pressure shock when the excess flow valve closes.

5.4.3. A valve intended for installation in one position only may be tested only in that position.

5.5. When the LNG excess flow valve is at cut-off position, the by-pass flow through the valve shall not exceed an airflow rate declared by the manufacturer in cm^3/minute at service pressure.

5.6. The device shall comply with the test procedures for the Class 5 components.

6. The LNG manual valve

6.1. The materials constituting the LNG manual valve which are in contact with the LNG when operating, shall be compatible with the test LNG. In order to verify this compatibility, the procedure described in Annex 5D shall be used.

6.2. Operating specifications

6.2.1. The LNG manual valve device in Class 5 shall be designed to withstand a pressure of 1.5 times the working pressure at cryogenic temperature.

6.2.2. The LNG manual valve device in Class 5 shall be designed to operate at a temperature from -162 °C to 85 °C.

6.3. LNG manual valve device requirements

One specimen shall be submitted to a fatigue test at a pressure-cycling rate not to exceed 4 cycles a minute as follows:

Held at -162 °C or lower while pressured for 100 cycles between 0 and working pressure WP. The maximum torque on the valve shall than comply with 2 times the force mentioned in Table 5.3 in Annex 5L. After the test the LNG manual valve shall comply with the external leak test in Annex 5B.

If during this test icing occurs, the LNG manual valve may be de-iced and dried.

6.4. The LNG manual valve has to comply with the test procedures for the Class 5 component.

Annex 4O

Provisions on the approval of the LNG fuel pump

1. The purpose of this annex is to determine the provisions on the approval of the LNG fuel pump.

2. The LNG fuel pump requirements:

2.1. The materials constituting the LNG fuel pump which are in contact with the LNG when operating, shall be compatible with the test LNG. In order to verify this compatibility, the procedure described in Annex 5D shall be used.

2.2. The LNG fuel pump, in Class 5 shall be designed to operate at a temperature from -162 °C to 85 °C.

2.3. The device shall comply with the test procedures for the Class 5 components.

2.4. The LNG fuel pump shall be constructed in such a manner as to avoid LNG trapping.

2.5. Means shall be provided for the LNG present in the pump at engine shut-off, to be safely processed without pressure increase above maximum safe working pressure.

2.6. The LNG fuel pump shall be provided with pressure control device to maintain the pressure within the operating pressure range.

2.6.1. The limitation of the power supplied by the actuating mechanism can be accepted in lieu of pressure control device.

2.6.2. An electronic control system can be accepted in lieu of pressure control device.

2.6.3. The pressure control device is not allowed to vent natural gas to atmosphere during normal function.

2.7. LNG fuel pump shall be provided with pressure relief valve to limit the pressure to the maximum safe working pressure of the pump.

2.7.1. The fuel system pressure relief valve is acceptable in place of pump pressure relief valve if by relieving system pressure it relieves the pump pressure.

2.8. The LNG fuel pump is allowed to function before the engine is started to produce required pressure in the fuel system. This function shall be achieved without delivering fuel to the engine if the engine is not running.

3. Applicable test procedures:

3.1. LNG fuel pump mounted inside the tank:

LNG compatibility test	Annex 5D
Resistance to dry heat	Annex 5F
Ozone ageing	Annex 5G
Low temperature test	Annex 5P

3.2. LNG fuel pump mounted outside the tank:

Overpressure or strength	Annex 5A
External leakage	Annex 5B
LNG compatibility	Annex 5D
Corrosion resistance	Annex 5E
Resistance to dry heat	Annex 5F
Ozone ageing	Annex 5G
Temperature cycle	Annex 5H
Vibration resistance	Annex 5N
Low temperature test	Annex 5P

Annex 5

Test procedures

1. Classification

1.1. CNG components for use in vehicles shall be classified with regard to the maximum working pressure and function, according to paragraph 2. of this Regulation. LNG components for use in vehicles shall be classified with regards to the minimum temperature, according to paragraph 3. of this Regulation.

1.2. The classification of the components determines the tests which have to be performed for type-approval of the components or parts of the components.

2. Applicable test procedures:

In Table 5.1 below, the applicable test procedures dependent on the classification are shown.

Table 5.1

Test	*Class 0*	*Class 1*	*Class 2*	*Class 3*	*Class 4*	*Class 5*	*Annex*
Overpressure or strength	X	X	X	X	O	X	5A
External leakage	X	X	X	X	O	X	5B
Internal leakage	A	A	A	A	O	A	5C
Durability tests	A	A	A	A	O	A	5L
CNG/LNG compatibility	A	A	A	A	A	A	5D
Corrosion resistance	X	X	X	X	X	A	5E
Resistance to dry heat	A	A	A	A	A	A	5F
Ozone ageing	A	A	A	A	A	A	5G
Burst/destructive tests	X	O	O	O	O	A	5M
Temperature cycle	A	A	A	A	O	A	5H
Pressure cycle	X	O	O	O	O	A	5I
Vibration resistance	A	A	A	A	O	A	5N
Operating temperatures	X	X	X	X	X	X	5O
LNG low temperature	O	O	O	O	O	X	5P

X = Applicable
O = Not applicable
A = As applicable

Remarks:

(a) Internal leakage: Applicable if the Class of the component consists of internal valve seats that are normally closed during engine "OFF" condition;

(b) Durability test: Applicable if the Class of the component consists of integral parts that will move repeatedly during engine operation;

(c) CNG compatibility, resistance to dry heat, ozone ageing: Applicable if the class of the component consists of synthetic / non-metallic parts;

(d) Temperature cyclic test: Applicable if the class of the component consists of synthetic / non-metallic parts;

(e) Vibration resistance test: Applicable if the Class of the component consists of integral parts that will move repeatedly during engine operation.

The materials used for the components shall have written specifications that fulfil at least or exceed the (test) requirements laid down in this annex with respect to:

(a) Temperature;

(b) Pressure;

(c) CNG/LNG compatibility;

(d) Durability.

3. General requirements

3.1. Leakage tests shall have to be conducted with pressurized gas like air or nitrogen for CNG. For LNG, cryogenic fluid shall be used.

3.2. Water or another fluid may be used to obtain the required pressure for the hydrostatic strength test.

3.3. The test period for the leakage test and the hydrostatic strength test shall be not less than 3 minutes.

Annex 5A

Overpressure test (strength test)

1. A CNG/LNG containing component shall withstand without any visible evidence of rupture or permanent distortion a hydraulic pressure of 1.5 to 2 times the maximum working pressure during a minimum of 3 minutes at room temperature with the outlet of the high-pressure part plugged. Water or any other suitable hydraulic fluid may be used as a test medium.

2. The samples, previously subjected to the durability test of Annex 5L are to be connected to a source of hydrostatic pressure. A positive shut-off valve and a pressure gauge, having a pressure of not less than 1.5 times nor more than 2 times the test pressure, are to be installed in the hydrostatic pressure supply piping.

3. Table 5.2 below shows the working and burst test pressures according to the classification of paragraph 2. of this Regulation.

Table 5.2

Classification of component	*Working pressure [kPa]*	*Overpressure [kPa]*
Class 0	3,000 < p < 26,000	1.5 times the working pressure
Class 1	450 < p < 3,000	1.5 times the working pressure
Class 2	20 < p < 450	2 times the working pressure
Class 3	450 < p < 3,000	2 times the relief pressure
Class 5	as specified by the manufacturer	1.5 times the working pressure

Annex 5B

External leakage test

1. A component shall be free from leakage through stem or body seals or other joints, and shall not show evidence of porosity in casting when tested as described in paragraphs 2. and 3. of this annex at any aerostatic pressure between 0 and the pressure shown in Table 5.2. of Annex 5A.

2. The test shall be performed at the following conditions:

   (a) At room temperature;

   (b) At the minimum operating temperature;

   (c) At the maximum operating temperature.

   The maximum and minimum operating temperatures are given in Annex 5O.

3. For CNG

   During this test, the equipment under test (EUT) will be connected to a source of aerostatic pressure. An automatic valve and a pressure gauge having a pressure range of not less than 1.5 times nor more than 2 times the test pressure have to be installed in the pressure supply piping. The pressure gauge is to be installed between the automatic valve and the sample under test. While under the applied test pressure, the sample shall be submerged in water to detect leakage or any other equivalent test method (flow measurement or pressure drop).

3.1. For LNG

   During this test the inlet of the component is connected to a source of cryogenic fluid according to the table in Annex 5O or lower temperature with the working pressure as declared by the manufacture. The flow is maintained for 0.5 hour.

4. The external leakage shall be lower than the requirements stated in the annexes or if no requirements are mentioned the external leakage shall be lower than 15 cm^3/hour.

5. High temperature test

   For CNG

   A CNG containing component shall not leak more than 15 cm^3/hour with the outlet plugged when submitted to a gas pressure, at maximum operating temperature as indicated in Annex 5O, equal to the maximum working pressure. The component shall be conditioned for at least 8 hours at this temperature.

5.1. For LNG

   A LNG containing component shall not leak more than 15 cm^3/hour with the flow mentioned in paragraph 3.1. in place when submitted to an outside temperature at the maximum operating temperatures mentioned in Annex 5O.

6. Low temperature test

For CNG

A CNG containing component shall not leak more than 15 cm^3/hour with the outlet plugged when submitted to a gas pressure, at the minimum operating temperature, equal to the maximum working pressure as declared by the manufacturer. The component shall be conditioned for at least 8 hours at this temperature.

6.1. For LNG

A LNG containing component shall not leak more than 15 cm^3/hour with the flow mentioned in paragraph 3.1. in place when submitted to an outside temperature at the minimum operating temperature mentioned in Annex 5O.

Annex 5C

Internal leakage test

1. The following tests are to be conducted on samples of valves or filling unit which have previously been subjected to the external leak test of Annex 5B above.

2. The seat of the valves, when in the closed position, shall be free from leakage at any aerostatic pressure between 0 to 1.5 times the working pressure (kPa). For LNG components, the temperature used is the cryogenic temperature (see Annex 5O).

3. A CNG non-return valve provided with a resilient seat (elastic), when in the closed position, shall not leak when subjected to any aerostatic pressure between 0 and 1.5 times the working pressure (kPa).

4. A CNG non-return valve provided with a metal-to-metal seat, when in the closed position, shall not leak at a rate exceeding 0.47 dm^3/s when subjected to an aerostatic pressure difference of 138 kPa effective pressure.

5. The seat of the upper CNG non-return valve used in the assembly of a filling unit, when in the closed position, shall be free from leakage at any aerostatic pressure between 0 and 1.5 times the working pressure (kPa).

6. The internal leakage tests are conducted with the inlet of the sample valve connected to a source of aerostatic pressure, the valve in the closed position, and with the outlet open. An automatic valve and a pressure gauge having a pressure range of not less than 1.5 times nor more than 2 times the test pressures are to be installed in the pressure supply piping. The pressure gauge is to be installed between the automatic valve and the sample under test. While under the applied test pressure, observations for leakage are to be made with the open outlet submerged in water unless otherwise indicated.

7. Compliance with paragraphs 2. to 5. below is to be determined by connecting a length of tubing to the valve outlet. The open end of this outlet tube is to be located within an inverted graduated cylinder which is calibrated in cubic centimetres. The inverted cylinder is to be closed by a water tight seal. The apparatus is to be adjusted so that:

   (a) The end of the outlet tube is located approximately 13 mm above the water level within the inverted graduated cylinder, and

   (b) The water within and exterior to the graduated cylinder is at the same level. With these adjustments made, the water level within the graduated cylinder is to be recorded. With the valve in the closed position assumed as the result of normal operation, air or nitrogen at the specified test pressure is to be applied to the valve inlet for a test period of not less than 2 minutes. During this time, the vertical position of the graduated cylinder is to be adjusted, if necessary, to maintain the same water level within and exterior to it.

At the end of the test period and with the water within and exterior to the graduated cylinder at the same level, the level of water within the graduated cylinder is again recorded. From the change of volume within the graduated cylinder, the leakage rate is to be calculated according to the following formula:

$$V_1 = V_t \cdot \frac{60}{t} \cdot \left(\frac{273}{T} \cdot \frac{P}{101.3} \right)$$

Where:

V_1 = leakage rate, cubic centimetres of air or nitrogen per hour.

V_t = increase in volume within graduated cylinder during test.

t = time of test, minutes.

P = barometric pressure during test, in kPa.

T = ambient temperature during test, in K.

8. Instead of the method described above, leakage may be measured by a flow meter installed on the inlet side of the valve under test. The flow meter shall be capable of indicating accurately, for the test fluid employed, the maximum leakage flow rates permitted.

Annex 5D

CNG/LNG compatibility test

1. A non-metallic part in contact with CNG/LNG shall not show excessive volume change or loss of weight.

   Resistance to n-pentane according to ISO 1817 with the following conditions:

   (a) Medium: n-pentane;

   (b) Temperature: 23 °C (tolerance according to ISO 1817);

   (c) Immersion period: 72 hours.

2. Requirements:

   Maximum change in volume 20 per cent;

   After storage in air with a temperature of 40 °C for a period of 48 hours the mass compared to the original value may not decrease more than 5 per cent.

Annex 5E

Corrosion resistance test

Corrosion resistance test procedures:

1. A metal CNG/LNG containing component shall comply with the leakage tests mentioned in Annexes 5B and 5C and after having been submitted to 144 hours salt spray test according to ISO 15500-2, with all connections closed.

2. A copper or brass CNG/LNG containing component shall comply with the leakage tests mentioned in Annexes 5B and 5C and after having been submitted to 24 hours immersion in ammonia according to ISO 15500-2 with all connections closed.

Annex 5F

Resistance to dry heat

1. The test has to be done in compliance with ISO 188. The test piece has to be exposed to air at a temperature equal to the maximum operating temperature for 168 hours.

2. The allowable change in tensile strength should not exceed +25 per cent. The allowable change in ultimate elongation shall not exceed the following values:

   (a) Maximum increase 10 per cent;

   (b) Maximum decrease 30 per cent.

Annex 5G

Ozone ageing

1. The test has to be in compliance with ISO 1431/1.

   The test piece, which has to be stressed to 20 per cent elongation, shall be exposed to air at 40 °C with an ozone concentration of 50 parts per hundred million during 72 hours.

2. No cracking of the test piece is allowed.

Annex 5H

Temperature cycle test

A non-metallic part containing CNG/LNG shall comply with the leakage tests mentioned in Annexes 5B and 5C after having been submitted to 96 hours temperature cycle from the minimum operating temperature up to the maximum operating temperature with a cycle time of 120 minutes, under maximum working pressure.

Annex 5I

Pressure cycle test applicable only to cylinders

(See Annex 3)

Annexes 5J and 5K - Not allocated

Annex 5L

Durability test (continued operation)

1. Test method for CNG components

1.1. The component shall be connected to a source of pressurized dry air or nitrogen by means of a suitable fitting and subjected to the number of cycles specified for that specific component. A cycle shall consist of one opening and one closing of the component within a period of not less than 10 ± 2 seconds.

(a) Room temperature cycling

The component shall be operated through 96 per cent of the total cycles at room temperature and at rated service pressure. During the off cycle the downstream pressure of the test fixture should be allowed to decay to 50 per cent of the test pressure. After that, the components shall comply with the leakage test of Annex 5B at room temperature. It is allowed to interrupt this part of the test at 20 per cent intervals for leakage testing.

(b) High temperature cycling

The component shall be operated through 2 per cent of the total cycles at the appropriate maximum temperature specified at rated service pressure. The component shall comply with the leakage test of Annex 5B at the appropriate maximum temperature at the completion of the high temperature cycles.

(c) Low temperature cycling

The component shall be operated through 2 per cent of the total cycles at the appropriate minimum temperature specified at rated service pressure. The component shall comply with the leakage test of Annex 5B at the appropriate minimum temperature specified at the completion of the low temperature cycles.

Following cycling and leakage re-test, the component shall be capable of completely opening and closing when a torque not greater than that specified in Table 5.3 below is applied to the component handle in a direction to open it completely and then in the reverse direction.

Table 5.3

Component inlet size [mm]	*Maximum torque [Nm]*
6	1.7
8 or 10	2.3
12	2.8

1.2. This test shall be conducted at the appropriate maximum temperature specified, and shall be repeated at a temperature of -40 °C.

1.3. Durability test for LNG products are mentioned in their specific Annex 4I up to Annex 4O, where applicable.

Annex 5M

Burst/destructive test applicable only to CNG cylinders

(See Annex 3A)

Annex 5N

Vibration resistance test

1. All components with moving parts shall remain undamaged, continue to operate, and comply with the component's leakage tests after 6 hours of vibration in accordance with the following test method.

2. Test method

2.1. The component shall be secured in an apparatus and vibrated for 2 hours at 17 Hz with an amplitude of 1.5 mm (0.06 inch) in each of three orientation axes. On completion of 6 hours of vibration the component shall comply with Annex 5C.

Annex 5O

Operating temperatures

The operating temperatures shall be:

	Engine compartment	*Assembled on the engine*	*On board*
Moderate (M)	-20 °C to 105 °C	-20 °C to 120 °C	-20 °C to 85 °C
Cold (C)	-40 °C to 105 °C	-40 °C to 120 °C	-40 °C to 85 °C
LNG (L)	-162 °C to 105 °C	-162 °C to 120 °C	-162 °C to 85 °C

Note - The LNG (L) temperature is the temperature of the fluid inside the components. For surrounding temperatures use M or C. Since, for LNG, saturation temperature and pressure have a direct relationship as shown in the table below, higher minimum temperatures shall be allowed for LNG components based on the described test pressure.

Temperature [°C]	*Pressure [barg]*
-161.6	0
-152.5	1
-146.4	2
-141.7	3
-137.8	4
-134.4	5
-131.4	6
-128.7	7
-126.3	8
-124.0	9
-121.9	10
-119.9	11
-118.1	12
-116.3	13
-114.6	14
-113.0	15
-111.5	16
-110.0	17
-108.6	18
-107.3	19
-106.0	20
-104.7	21
-103.5	22
-102.3	23
-101.2	24

Source: http://webbook.nist.gov/chemistry/fluid/Saturation

Annex 5P

LNG – Low temperature test

1. The component shall be operated through 96 per cent of the total cycles (given in the Annex 4 of the product) at less -162 °C temperature and working pressure.

2. The component shall be operated through 4 per cent of the total cycles at the appropriate maximum temperature (specified in Annex 5O) and working pressure and shall comply with Annexes 5B and 5C at the completion of the temperature cycles.

3. This test may be interrupted, if desired, at 20 per cent intervals for leakage testing.

4. Following cycling testing, perform the hydrostatic test.

Annex 5Q

Compatibility with heat exchange fluids of non-metallic parts

1. The test samples shall be submerged in heat exchange medium for 168 hours at 90 °C then they shall be dried for 48 hours at a temperature of 40 °C. The composition of the heat exchange medium used of the test is water/ethylene-glycol fluid of 50 per cent/50 per cent.

2. The test is deemed to be satisfactory if the change in volume is less than 20 per cent, the change in mass is less than 5 per cent, the change in tensile strength is less than -25 per cent and the change in elongation at break is within -30 per cent and +10 per cent.

Annex 6

Provisions on CNG identification mark for vehicles of categories M_2 and M_3, N_2 and N_3

(Paragraph 18.1.8.1. of this Regulation)

The sign consists of a sticker which shall be weather resistant.

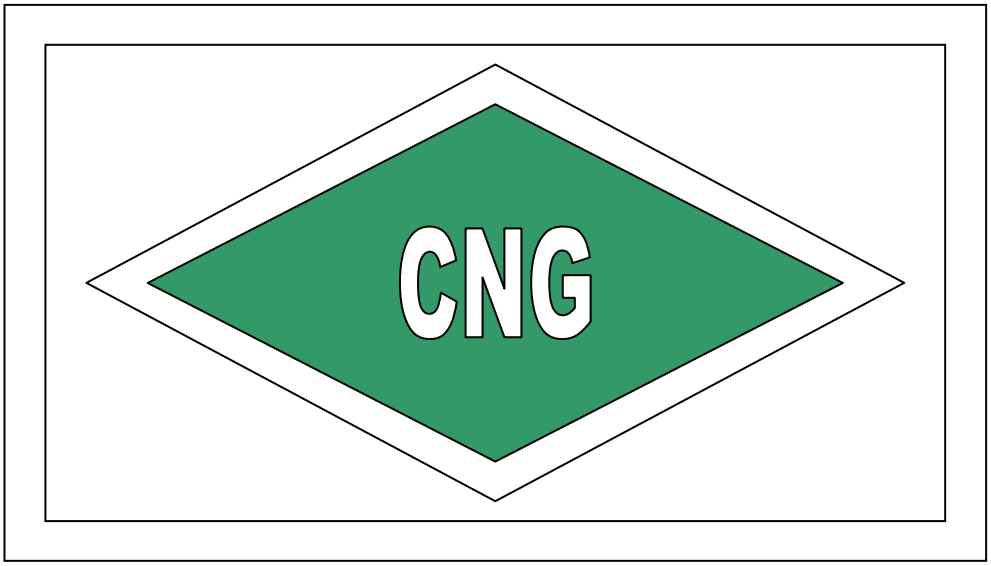

The colour and dimensions of the sticker shall fulfil the following requirements:

Colours:

Background:	green
Border:	white or white reflecting
Letters:	white or white reflecting

Dimensions:

Border width:	4 - 6 mm
Character height:	≥ 25 mm
Character thickness:	≥ 4 mm
Sticker width:	110 - 150 mm
Sticker height:	80 - 110 mm

The word "CNG" shall be centred in the middle of the sticker.

Annex 7

Provisions on LNG identification mark for vehicles of categories M_2 and M_3, N_2 and N_3

(Paragraph 18.1.8.2. of this Regulation)

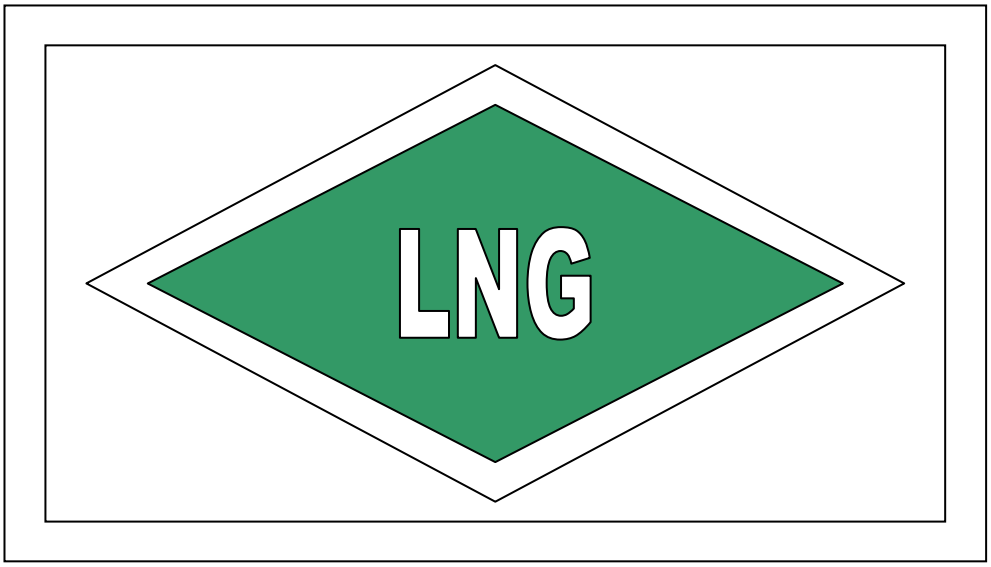

The sign consists of a sticker which shall be weather resistant.

The colour and dimensions of the sticker shall fulfil the following requirements:

Colours:

Background:	green
Border:	white or white reflecting
Letters:	white or white reflecting

Dimensions:

Border width:	4 - 6 mm
Character height:	≥ 25 mm
Character thickness:	≥ 4 mm
Sticker width:	110 - 150 mm
Sticker height:	80 - 110 mm

The word "LNG" shall be centred in the middle of the sticker.