Transmitted by the expert from Germany
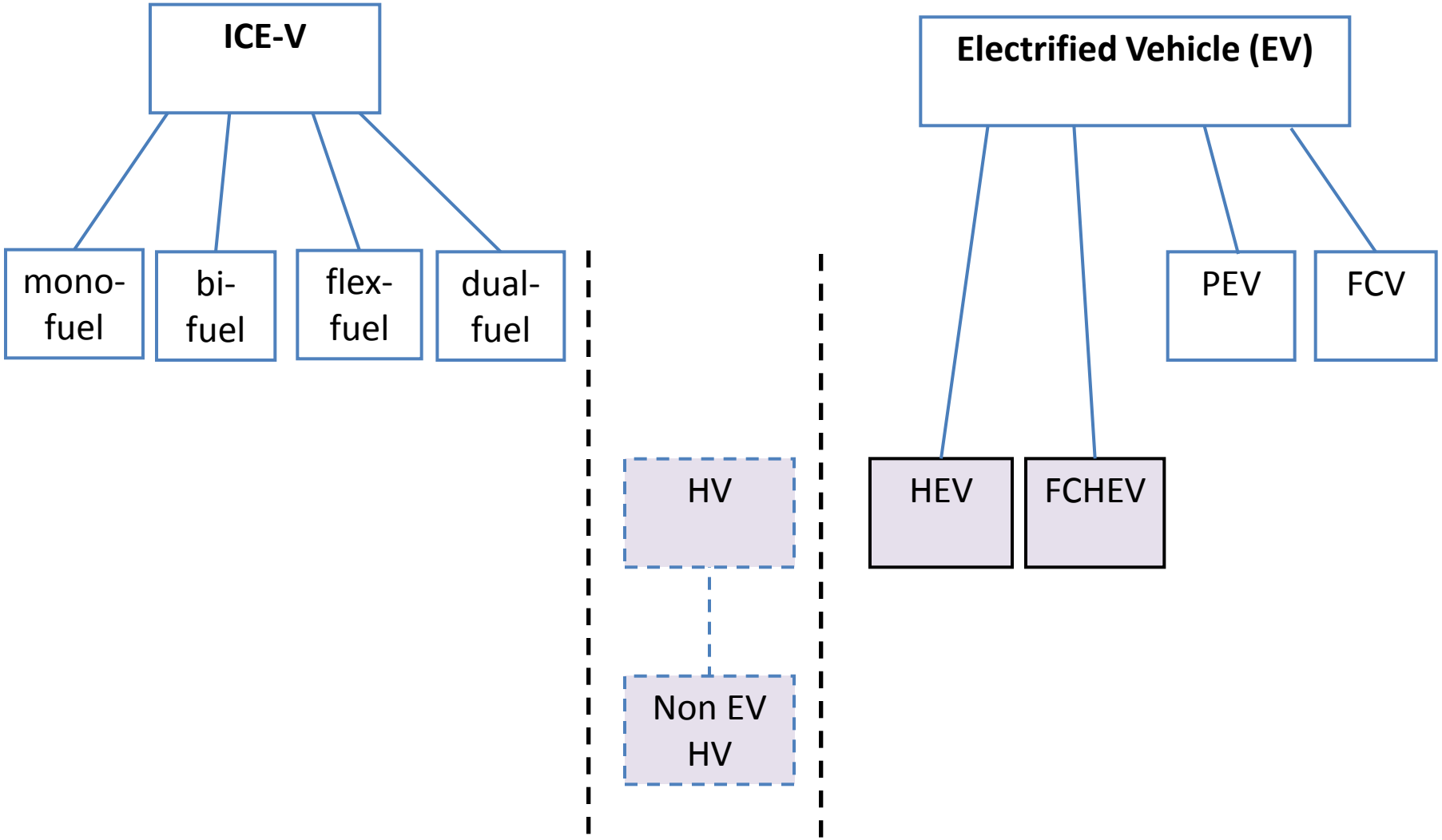
Informal document No. **GRPE-65-13**
(65th GRPE, 15 - 18 January 2012, agenda item 12)