GOBIERNO DE ESPAÑA

MINISTERIO DE AGRICULTURA, ALIMENTACIÓN Y MEDIO AMBIENTE

Albufeira Convention on Cooperation for the Protection and Sustainable Use of Waters in Portuguese-Spanish River Basins: Infrastructure Management in a Transboundary Context

Second workshop."River Basin Commissions and Other Joint Bodies for Transboundary Water Cooperation"

Geneva, the 9th-10th of April 2014

GOBIERNO DE ESPAÑA
MINISTERIO DE AGRICULTURA, ALIMENTACIÓN Y MEDIO AMBIENTE

GUIDING PRINCIPLES

OBJECTIVE:
Searching for a balance between environmental protection and use of the necessary water resources for a sustainable development of both countries.
Need to coordinate their respective efforts for a better knowledge and water management of the shared river basins.

SCOPE OF APPLICABILITY: transboundary water basins of Minho, Limia, Douro, Tagus and Guadiana rivers.
INSTITUTIONAL REGIME: 2 joint bodies: *Commission for the Implementation and Development of the Albufeira Convention (CADC)* and *Conference of the Parties*.
BROADENING OF THE FRAMEWORK.- Respect for the integrity of shared river basins (including both surface and ground water) and their related ecosystems.
WIDENING THE MATERIAL RANGE.- It concerns every activity related to the use of resources including water quality protection.
COOPERATION BETWEEN PARTIES.- It is structured around **four** key elements:
•Exchange of information, regularly and systematically
•Consultations to be developed through specific bodies.
•Measures that enable the approval of the administrative and legal systems of both countries
•Flow regime
RECONCILING THE COMMITMENTS of the previous Conventions (1964 and 1968) with the current regulations of the Albufeira Convention.

ESSENTIAL CONTENT

- EXCHANGE OF INFORMATION
- TRANSBOUNDARY IMPACTS
- QUALITY AND POLLUTION
- USES OF WATER
- FLOODS AND DROUGHTS.
- EMERGENCIES. INFRASTRUCTURES SECURITY
- FLOW REGIME
- INSTITUTIONAL REGIME
- GUARANTEES REGIME

- Working group of Information Exchange and Emergency Situations
- Working group of Hydrological Planning

FLOW REGIME (I)

Guaranteed flow rates are set **at certain points**, enabling the maintenance of the hydrological and environmental functions of rivers.

The determination of the flow regime is based on the following criteria:

a)Geographical, hydrological, climatic and other natural characteristics of each river basin.

b)Needs of water to guarantee the quality of the waters, according to their ecological characteristics.

c)Needs of water to guarantee current and expected uses, appropriate for a sustainable use of the hydrological resources in each river basin.

d)Existing infrastructures, especially those with ability to usefully regulate the current flow regime.

e)The 1964 and 1968 Conventions will be amended in every aspect contradicting the implementation of the conditions agreed on the protocol of the Convention revision.

FLOW REGIME(II)

The hydrological regime of Portuguese-Spanish rivers is utterly irregular

CONDITIONS FOR DEROGATION TO THE COMPLIANCE OF THE FLOW REGIME
based on the precipitation taken as a reference in every basin (applicable to all the control stations) and on the volume stored in the reservoirs taken as reference (only for the Guadiana basin control station). There is no obligation to fulfill the flow regime.

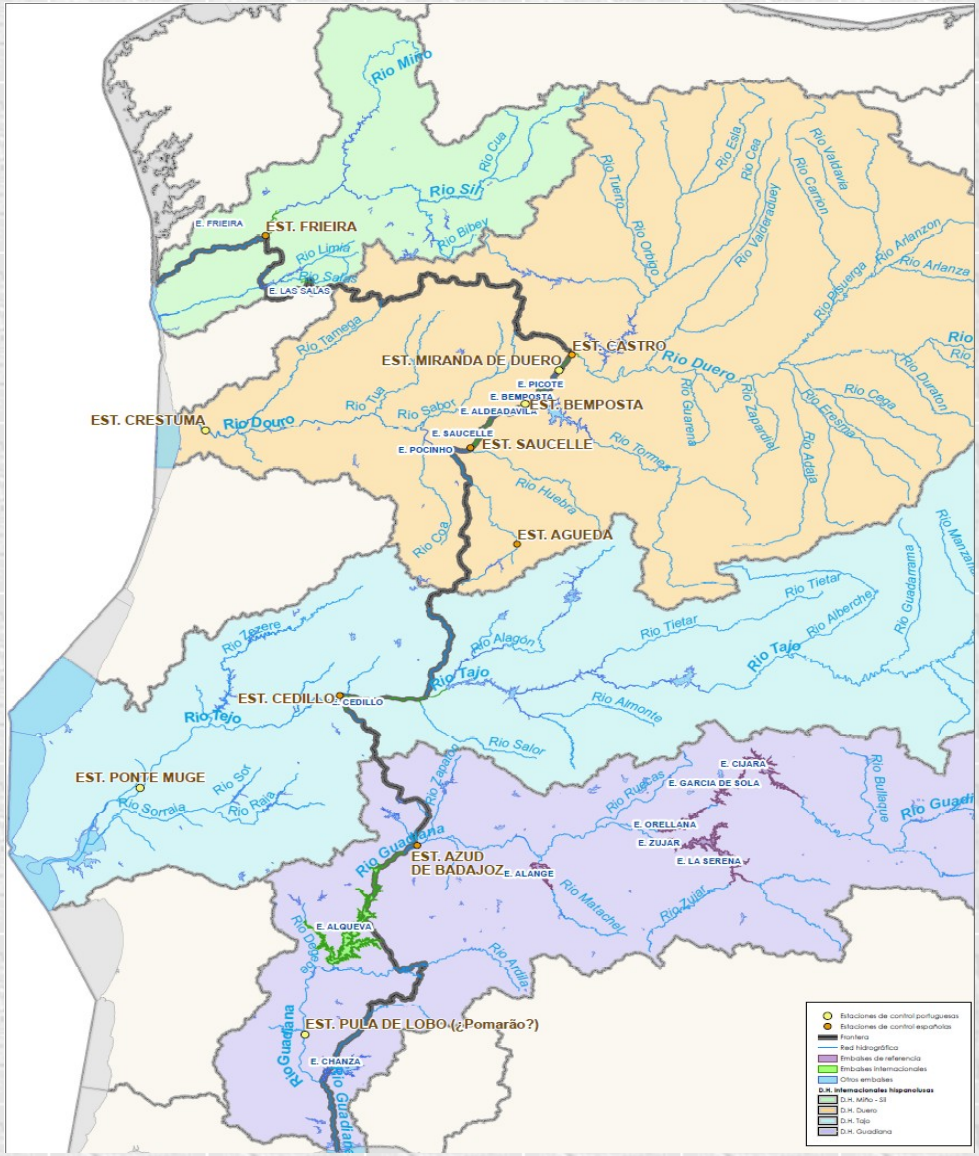

GOBIERNO DE ESPAÑA
MINISTERIO DE AGRICULTURA, ALIMENTACIÓN Y MEDIO AMBIENTE

FLOW REGIME (III)

RIVER FLOW REGIME AT THE STATIONS OF THE CONVENTION								
WATER LEVEL MONITORING STATION		MIÑO		DUERO	TAJO		GUADIANA	
	FRIEIRA	MIRANDA AND BEMPOSTA	SAUCELLE -ÁGUEDA RIVER	CRESTUMA	CEDILLO	PONTE MUGE	AZUD DE BADAJOZ	POMARÃO
ANNUAL FLOW REGIME (hm^3/year) 3.800								
	3.700	3..500		5.000	2.700	4.000	300-600	Not defined
QUARTERLY FLOW REGIME								
October the 1st to December the 31st	440 hm^3	510 hm^3 580 hm^3 hm^3		770 hm^3	295	150 hm^3	32-63 hm^3	Not defined
January the 1st to March the 31st	530 hm^3	630 hm^3	720 hm^3	950 hm^3	350 hm^3	180 hm^3	37-74 hm^3	
April the 1st to June the 30th	330 hm^3	480 hm^3	520 hm^3	690 hm^3	220 hm^3	110 hm^3	21-42 hm^3	
July the 1st to September the 30th	180 hm^3	270 hm^3	300 hm^3	400 hm^3	130 hm^3	60 hm^3	16-32 hm^3	
WEEKLY FLOW REGIME								
		10 hm^3	15 hm^3	20 hm^3	7 hm^3	3 hm^3		
DAILY FLOW REGIME								
							2m^3/s	2m^3/s

GOBIERNO DE ESPAÑA | MINISTERIO DE AGRICULTURA, ALIMENTACIÓN Y MEDIO AMBIENTE

DISCHARGE REGIME (IV)

COMMITMENT TO MINIMUM VALUES	EXCEPTIONS
Total contribution of the hydrological year	- Precipitation (P) from the beginning of the year until a given month is some % less than the P average - In the case of the Guadiana river, the volume stored in reservoirs influences too.
Quarterly contribution	- P during 6 months until the 1st day of the last month of the trimester is some % less than the P average for the same period - In the case of the Guadiana, the volume stored in reservoirs influences too.
Weekly contribution (1)	
Average daily flow (2)	- No exceptions

(1) Only for Duero and Tagus river basins

(2) Only for the Guadiana river basin

NEW FLOW REGIME

Represents an extension of the current flow regimes (annual and daily -only in the Guadiana river) to quarterly, weekly and daily flow regimes.

COORDINATION OF WATER USES: INTERNATIONAL SECTION OF THE DUERO (I)

The Albufeira Convention has confirmed the hydroelectric division established in the 1964 Convention, so that the hydroelectric development of the international section between the source and the mouth of the Tormes river, corresponds to Portugal (Central de Miranda, and Bemposta Picote) along with the section between the mouth of the Huebra river and the international section. Moreover, the hydroelectric development of the stretch between the mouth of the Tormes river and the Huebra (Aldeadávila and Saucelle stations) belongs to Spain.

Great importance of water resource use in the international section for both countries:

- Spain (21% national hydroelectric production)
- Portugal (53% national hydroelectric production)

Other less significant demands: navigation, communications,supply.

Harmonization of legal and environmental criteria for different uses: responsible statement, invasive species, etc.

Restrictions of use:
respect for annual, quarterly and weekly flow rule of the Protocol of the Albufeira Convention Revision.

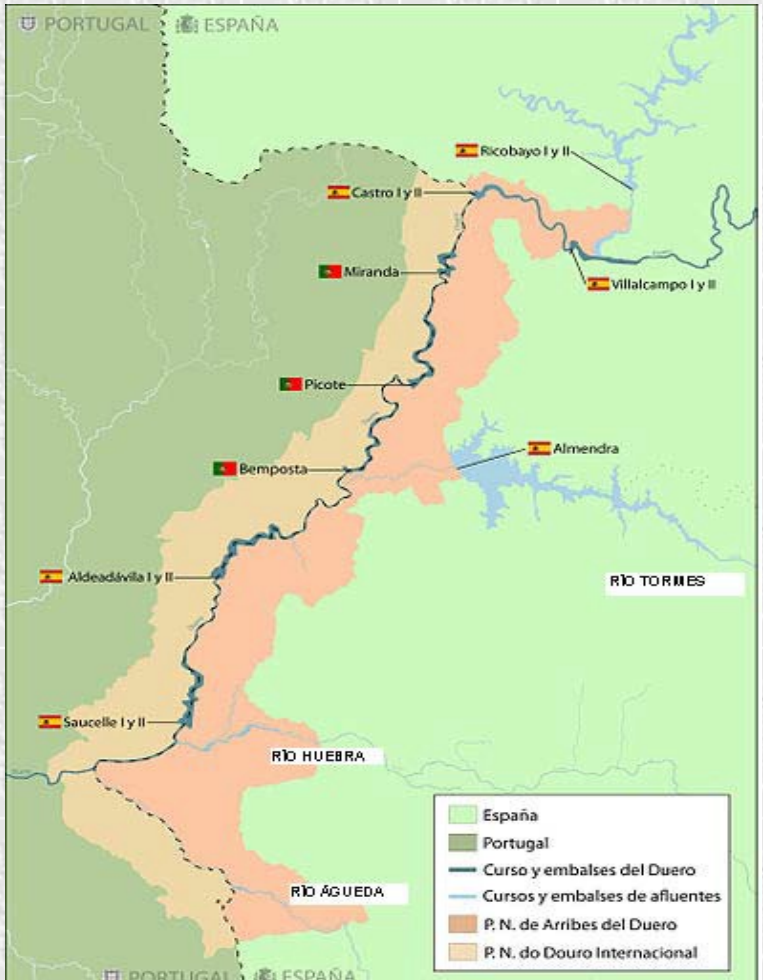

COORDINATION OF USES OF THE WATER: INTERNATIONAL SECTION OF THE DUERO(II)

Sistema	Producción media por horizonte en la serie corta (GWh/año)						
	2009	2015	2021	2027	Variación (%) 2015-2009	Variación (%) 2021-2009	Variación (%) 2027-2009
Támega-Manzanas	13,2	13,2	13,2	12,6	0,0	0,0	-4,0
Tera	253,5	253,3	253,4	232,9	-0,1	-0,1	-8,2
Órbigo	125,4	122,5	122,7	115,2	-2,3	-2,2	-8,2
Esla[23]	1010,3	1021,8	1003,6	873,2	1,1	-0,7	-13,6
Carrión	162,8	177,4	176,5	164,0	9,0	8,4	0,7
Pisuerga	119,7	126,6	123,3	114,7	5,7	3,0	-4,2
Arlanza	15,9	35,8	35,7	34,9	125,8	125,1	120,0
Alto Duero	83,7	87,5	87,4	80,2	4,6	4,5	-4,2
Riaza-Duratón	69,8	76,8	76,5	69,1	9,9	9,5	-1,1
Cega-Eresma-Adaja	26,9	26,7	26,9	23,5	-0,8	0,0	-12,4
Bajo Duero[24]	125,7	136,3	133,8	121,1	8,5	6,5	-3,6
Tormes[25]	124,6	128,4	124,5	109,5	3,0	-0,1	-12,2
Águeda	20,0	42,1	42,0	34,2	110,7	110,1	71,3
Tramo internacional[26]	5518,6	5476,2	5354,4	4671,7	-0,8	-3,0	-15,4
Total	7670,0	7724,5	7573,7	6657,4	0,7	-1,3	-13,2

Tabla 385. Resumen de producciones hidroeléctricas por sistema de explotación

During the scenarios of 2015, 2021 and 2027, the tendency shows a decrease of the overall production in the basin as a result of the impact of the increased consumptive uses.

- It has been confirmed that the attention of the demands on the scenarios of 2009, 2015 and 2021 does not breach the Albufeira Convention as for the Miranda-Bemposta control station and the Saucelle-Agueda river station.
- It's important to consider the impact of climate change on availability of water resources and on the compliance of Albufeira flow regime.

GOBIERNO DE ESPAÑA
MINISTERIO DE AGRICULTURA, ALIMENTACIÓN Y MEDIO AMBIENTE

FLOOD MANAGEMENT IN THE TRANSBOUNDARY CONTEXT (I)

APA- CHTAJO COOPERATION IUNDERTHE TAGUS RIVER BASIN FLOOD MANAGEMENT BETWEEN MARCH-APRIL 2013

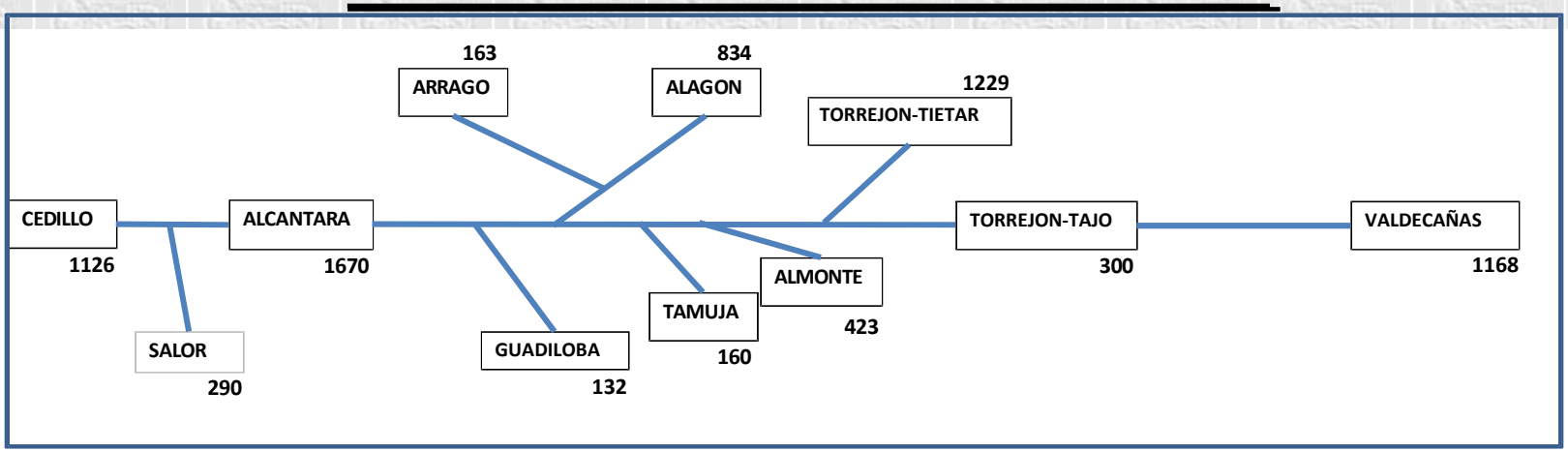

Valdecañas Reservoir. Its water level situation allowed, during the process, the storage of the contribution flows without emptying the reservoir, allowing to avoid an increase of the peak flows in the border with Portugal, which was in turn being heavily contributed by the precipitations that had occurred. This operation was able to reduce the severity of Alcantara's rain flood and, at the same time, Cedillo's and Portugal's.

Alcántara Reservoir : the time lag values of the flows in and out of the Alcantara reservoir are very important to reduce the peak flows in Portugal.

Cedillo Reservoir : very high values were recorded during this episode. The peak flow recorded 4416.6 m^3/s and the maximum flow drained from Portugal did not exceed 4,000 m^3/s.

Conclusion: It has been estimated that the recorded rain flood was of 7.205 m^3/s and that its course was altered to a maximum outflow to the Cedillo reservoir in Portugal in a quantity not over 4,000 m^3/s. Orange alert was activated by Portugal's Civil Protection as a result of the flows circulating along the Tajo. At the same time, the Zezere river, in Portugal, carried discharges of 1,000 m^3/s, which, together with the approximately 4,500 more that the Tajo was carrying, produced a rate of about 5,500 m^3/s in the Portuguese town of Almourol.

The active information exchange between both countries and a precise management of infrastructures avoid significant damages in Portugal.

GOBIERNO DE ESPAÑA
MINISTERIO DE AGRICULTURA, ALIMENTACIÓN Y MEDIO AMBIENTE

FLOOD MANAGEMENT IN THE TRANSBOUNDARY CONTEXT (II)

	BASIN STATE (hm3)		FLOOD VOLUME (hm3)		MAXIMUM FLOW (m3/s)		RETURN PERIOD
RESERVOIR	Initial V	Final V	In V	Out V	In Q	Out Q	
VALDECAÑAS	1.089,91	1.341,89	262,00	10,02	1.168,30	229,47	~5
TORREJÓN-TAJO	156,16	155,93	84,85	79,71	528,76	339,21	~2
ALCÁNTARA	2.873,44	2.955,04	807,52	727,23	4.314,33	2.963,72	~25
SALOR	14,408	14,052	19,16	19,484	198,949	185,64	>25
CEDILLO	247,793	226,902	1.131,28	1.156,16	4.416,60	4.000,00	~25

Information exchange tools:

•Automatic Hydrological Information System (SAIH): http://saihtajo.chtajo.es/

•Cartography National System of rain flood (SNCZI): http://sig.magrama.es/snczi/visor.html?herramienta=DPHZI

•Hydrological information common system of the transboundary section of the Tajo (SICOINFRONJO): http://sicoinfronjo.chtajo.es/sicoinfronjo/list.html

GOBIERNO DE ESPAÑA
MINISTERIO DE AGRICULTURA, ALIMENTACIÓN Y MEDIO AMBIENTE

CURRENT DROUGHT MANAGEMENT: DROUGHT MANAGEMENT PLANS (I)

1. Creation of a **Global Indicator System:**

- Definition of demanded units.
- Selection of the indicator that represents the best the evolution of the available resources for each demanded unit: most appropiate hydrometerological variable/s: reservoir storage capacity, fluvial discharges, etc.

2. **Classification of the hydrological drought status and potential restrictions associated to them:** for the purpose of arranging any progressive implementation of measures and actions depending on the evolution of drought.

3. **Development of Special Plans of Action in Situations of Warning and Eventual Droughts**, for the purpose of managing anything concerning the control, monitoring, evaluation of risks,decision making and implementation of measures.

4. **Emergency Plans** for urban water supplies for 20,000 inhabitants.

TIPOS	DESCRIPCIÓN
GENERAL	- Minimizar los impactos ambientales, económicos y sociales de las situaciones de sequía
ESPECÍFICOS	- Garantizar la disponibilidad de agua requerida para asegurar la salud y la vida de la población
	- Evitar o minimizar los efectos negativos de las sequías sobre el estado ecológico de las masas de agua, en especial sobre el régimen de caudales ecológicos, evitando, en todo caso, efectos negativos permanentes sobre dicho estado.
	- Minimizar los efectos negativos sobre el abastecimiento urbano.
	- Minimizar los efectos negativos sobre las actividades económicas, según la priorización de usos establecidos en la legislación de aguas y en los planes hidrológicos.
INSTRUMENTALES	- Definir mecanismos para la previsión y detección de situaciones de sequía
	- Fijar umbrales de fases de gravedad progresiva de las sequías
	- Definir medidas para conseguir los objetivos específicos en cada escenario de sequía
	- Asegurar la transparencia y participación pública en la elaboración y aplicación de los Planes

GOBIERNO DE ESPAÑA
MINISTERIO DE AGRICULTURA, ALIMENTACIÓN Y MEDIO AMBIENTE

CURRENT DROUGHT MANAGEMENT: DROUGHT MANAGEMENT PLANS (II)

TYPOLOGY OF MEASURES GATHERED IN THE PES

Strategic: long or middle term actions of institutional or infrastructural nature within the hydrological planning. State of normality. Examples: Storage structures, gathering of new resources, desalination, current tariff changes, regulatory changes;

Tactical: short-term actions planned and ratified in advanced within Drought Management Plans. State of warning and early warning. Examples: Changes in operating rules, rearrangement of extractions, increasing exploitation of groundwaters…

Emergency: actions once the drought has advanced quite a long way, that vary depending on the severity and extension. State of emergency. Examples: restriction of usage, activation of IDC procedures, temporary overexploitation of aquifer resources, etc.

TYPOLOGY OF MITIGATION MEASURES				
Indicator	0,5 - 1	0,3 – 0,5	0,15- 0,3	0- 0,15
State	Normality	Early warning	Warning	Emergency
Aim	Planning	Control	Conservation	Restrictions
Type	Strategic		Tactical	Emergency

DROUGHT PHASES	ASSOCIATED MEASURES
STATE OF NORMALITY Early Warning threshold	
STATE OF EARLY WARNING Warning threshold	Prevention Increase in control and surveillance Management of demands
STATE OF WARNING Emergency threshold	Increase of additional resources Conservation and surveillance of resources Management of demands
STATE OF EMERGENCY	Increase of additional resources Restrictions Managment of demands

GOBIERNO DE ESPAÑA

MINISTERIO DE AGRICULTURA, ALIMENTACIÓN Y MEDIO AMBIENTE

CURRENT DROUGHT MANAGEMENT: IMPACTS ON OPERATIONAL MODELS

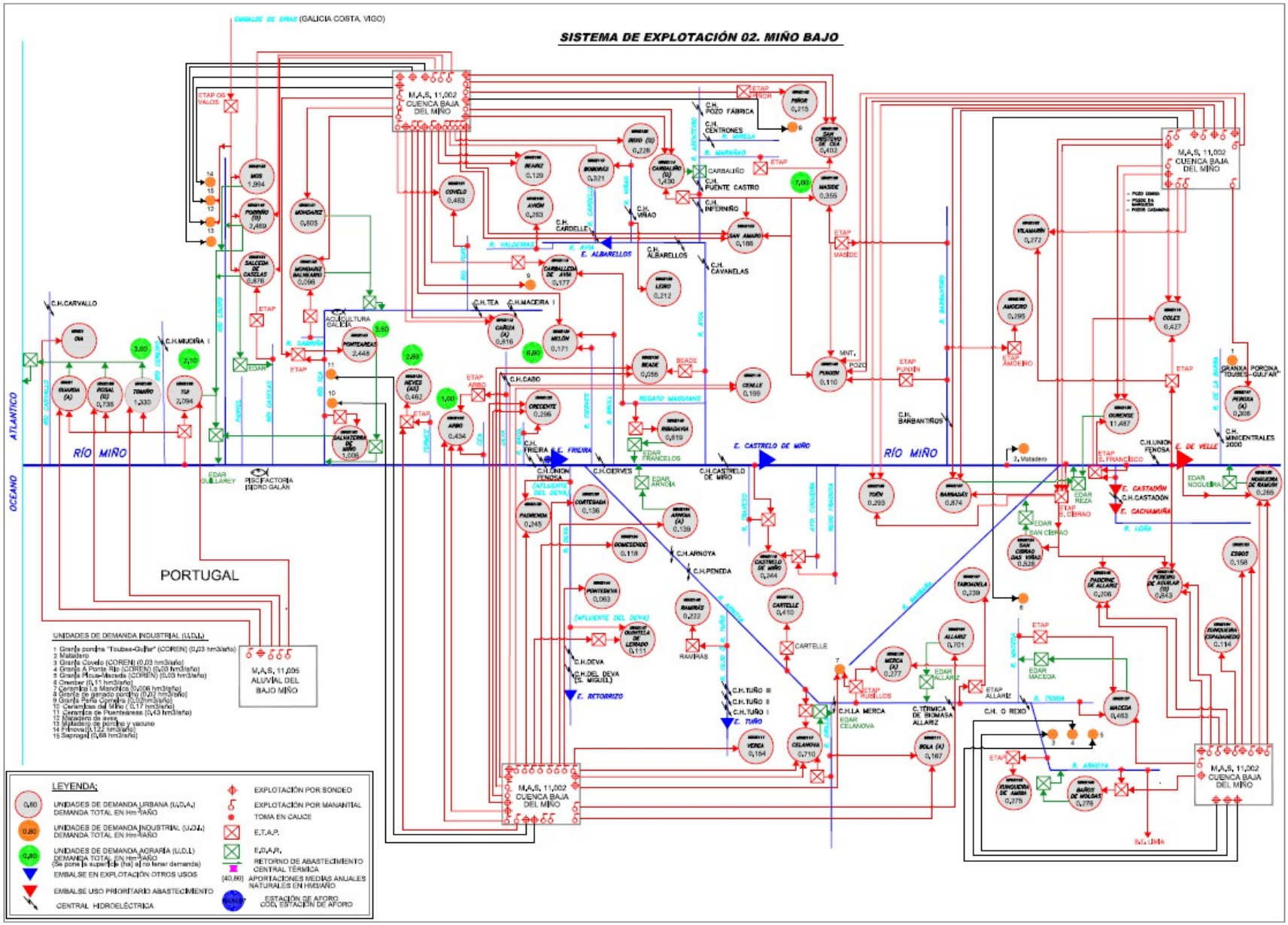

GOBIERNO DE ESPAÑA

MINISTERIO DE AGRICULTURA, ALIMENTACIÓN Y MEDIO AMBIENTE

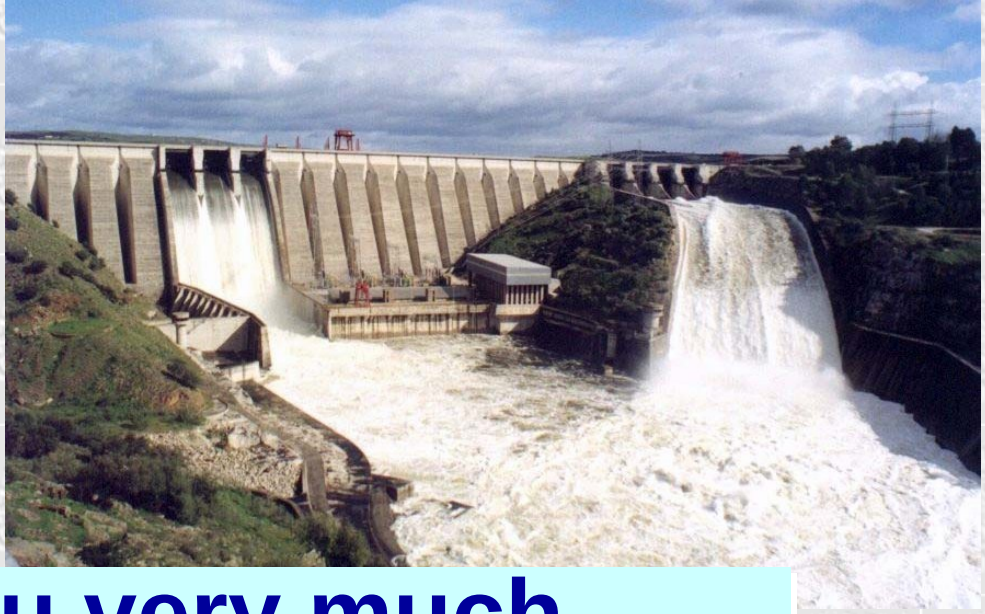

Thank you very much

stcadc@magrama.es