PROVEN VAM RTO TECHNOLOGY

JUNE 2019

1. Successful VAM processing
2. VAM RTO pilot projects
3. Official commercial VAM projects
4. How RTO processing works
5. Guide Lines for VAM RTO projects

PROCESSING VAM EMISSIONS

JUNE 2019

VAM processing technologies

- Several VAM processing technologies are <u>under development</u>. These include;
  - new methane catalyst processes
  - lean gas turbines
  - concentrators

These are all <u>yet to be deployed</u> on a commercial basis.

PROCESSING VAM EMISSIONS

JUNE 2019

VAM processing technologies

- Several VAM processing technologies are under development. These include;
  - new methane catalyst processes
  - lean gas turbines
  - concentrators

  These are all yet to be deployed on a commercial basis.

- Traditional RTO (Regenerative Thermal Oxidation) technology is well proven in the commercial VAM installations already executed. These have been -

- provided by RTO suppliers with extensive experience from thousands of RTO installations, whereof many in industries with very high demands on safety.

VAM RTO Pilot Projects

JUNE 2019

- **First successful VAM pilots**
  - **in 1994, processing VAM several months at British Coal, UK**
  - **In 1997 - 98, generating steam from processing VAM during 12 months at BHP, Australia**
  - **In 2007-08, processing abandoned mine methane, injected into fresh air to simulate various VAM concentrations at CONSOL Energy, USA.**

- VAM abatement China - several projects by domestic new RTO manufacturers.
  No info found on status or on performance.

- VAM abatement Australia - recent pilot tests by domestic new RTO manufacturer.

- RTO producers established in other industrial applications are seeking VAM pilot installations.

Principle of RTO reaction

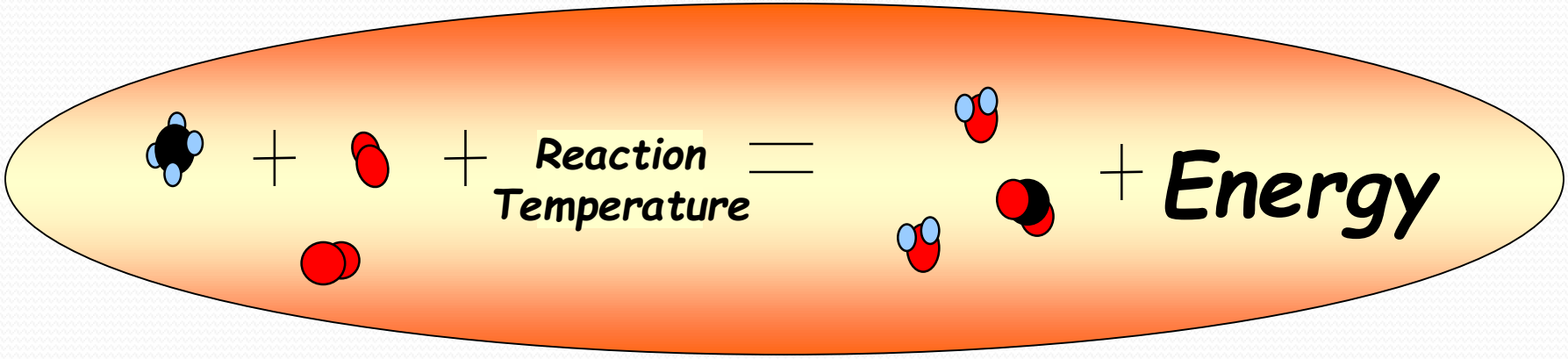

Like all VOC gases,
methane oxidize at 850-900°C
to form water and CO_2.

And release Energy!

VOC Oxidation Rate

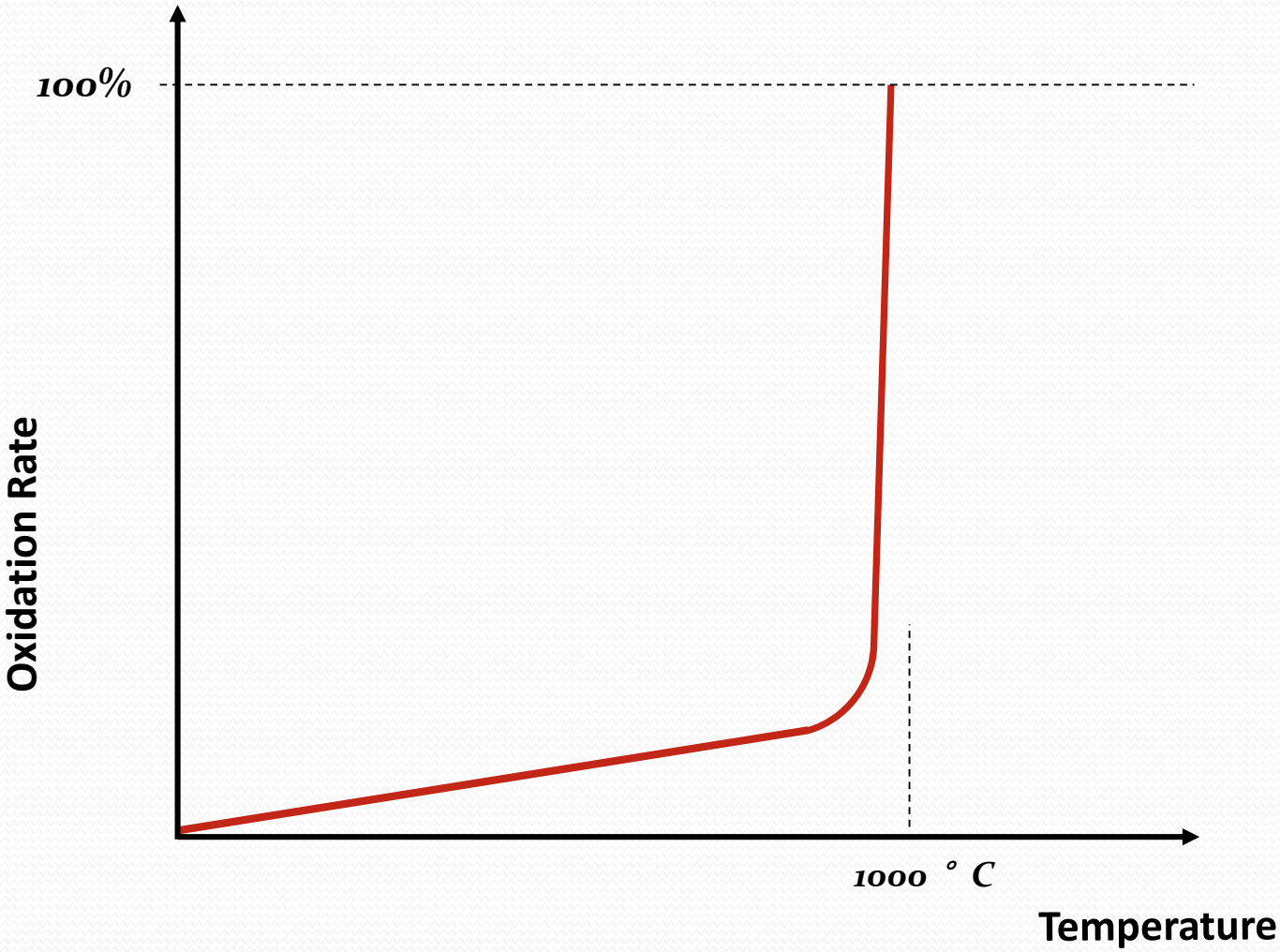

Single can RTO

RTO FUNCTION:

1. Heat center cross section of ceramic bed to 1000°C.
2. Pass ventilation air through, heating media, oxidizing all VAM in air passing the hot zone.
3. Change direction of flow, making hot zone remain in center bed section.

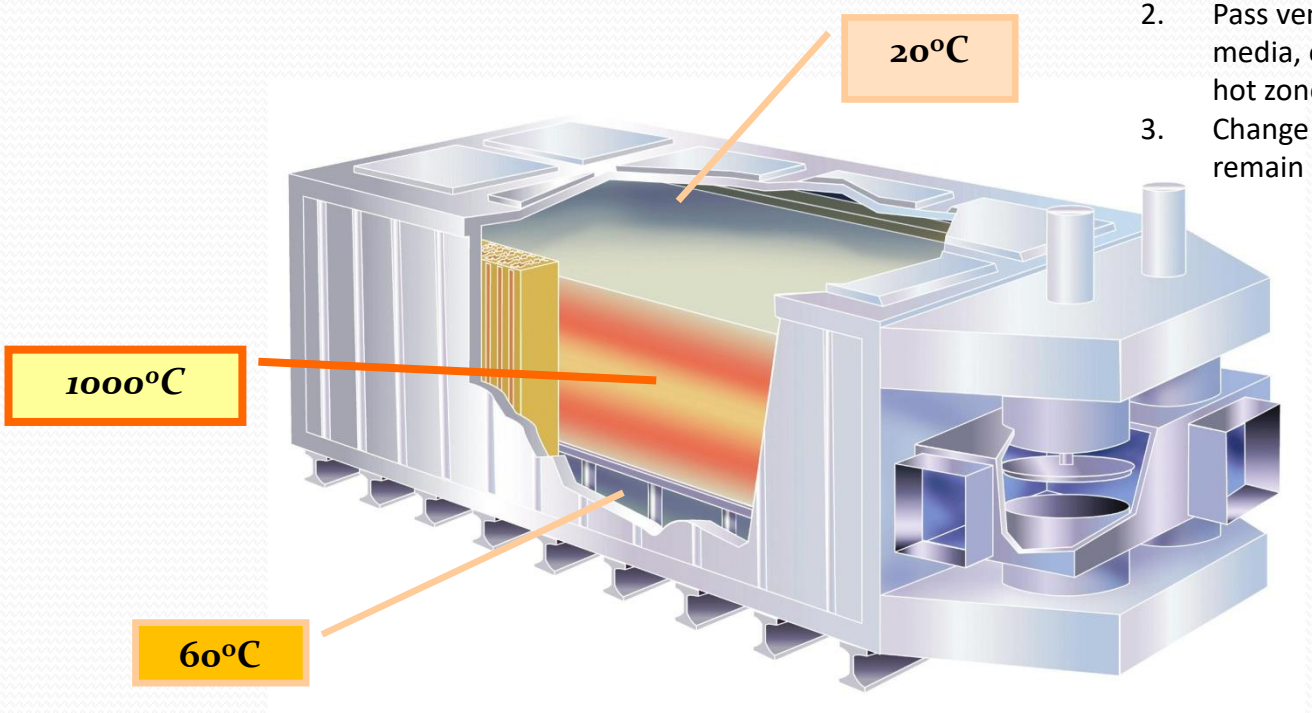

No catalyst

operate at natural oxidizing temperature

Single can RTO

Flow down

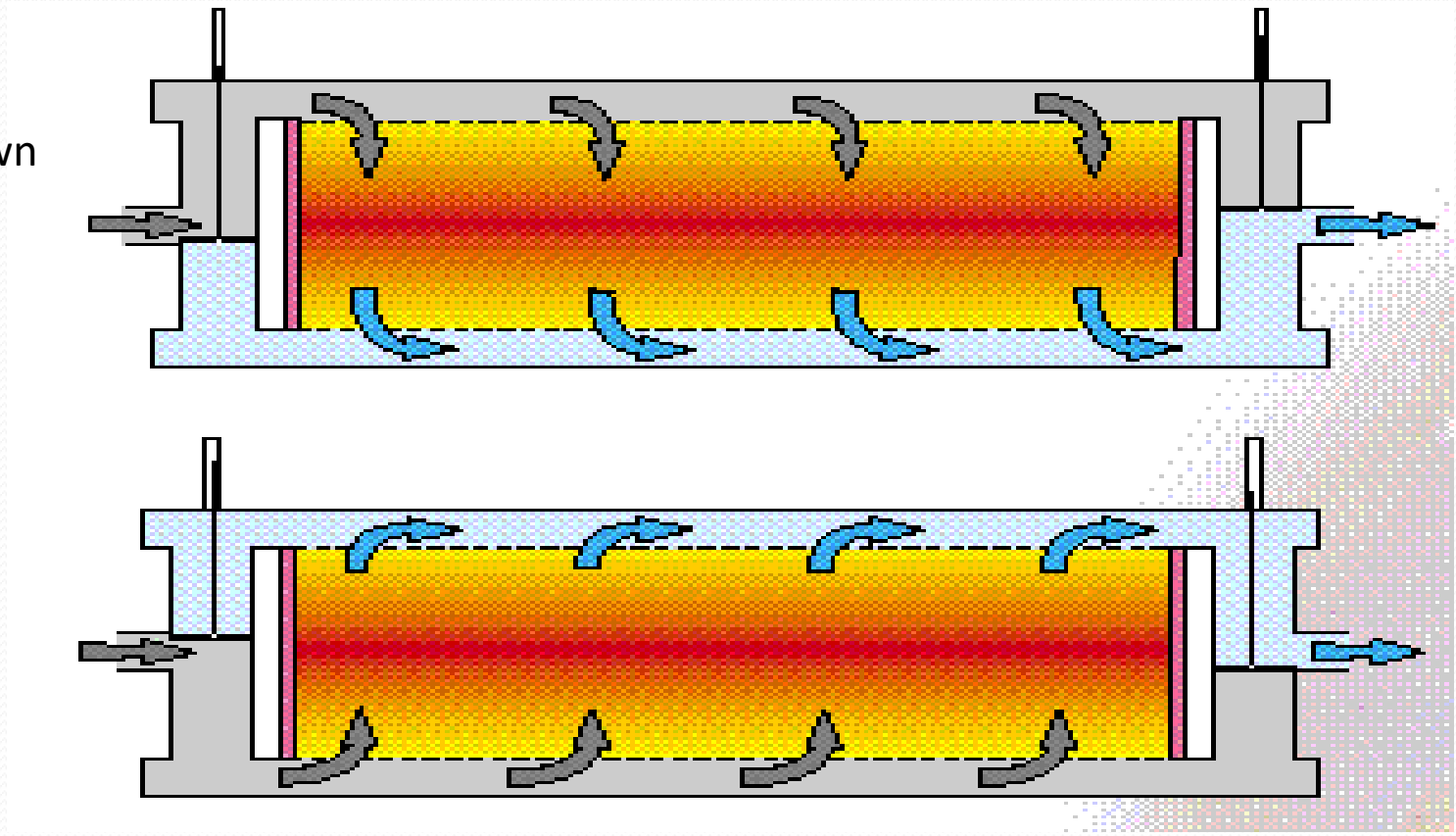

Flow up

2 Can (or more) RTO

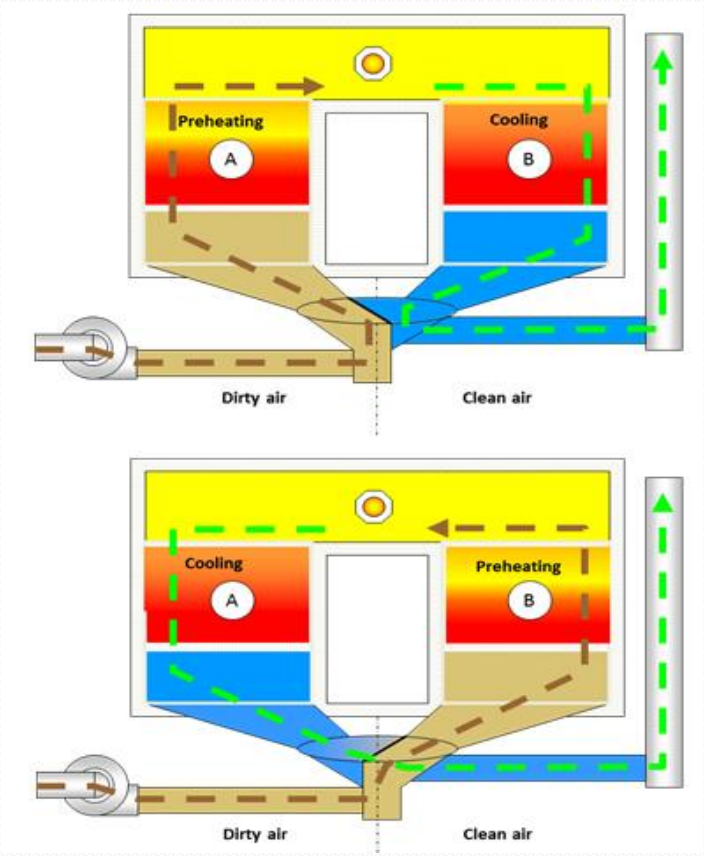

Main difference between the single can RTO and 2 can or multiple can RTO's: Oxidation in a combustion chamber instead of in the ceramic bed.

RTO installations typically consists of multiple modular RTO units.

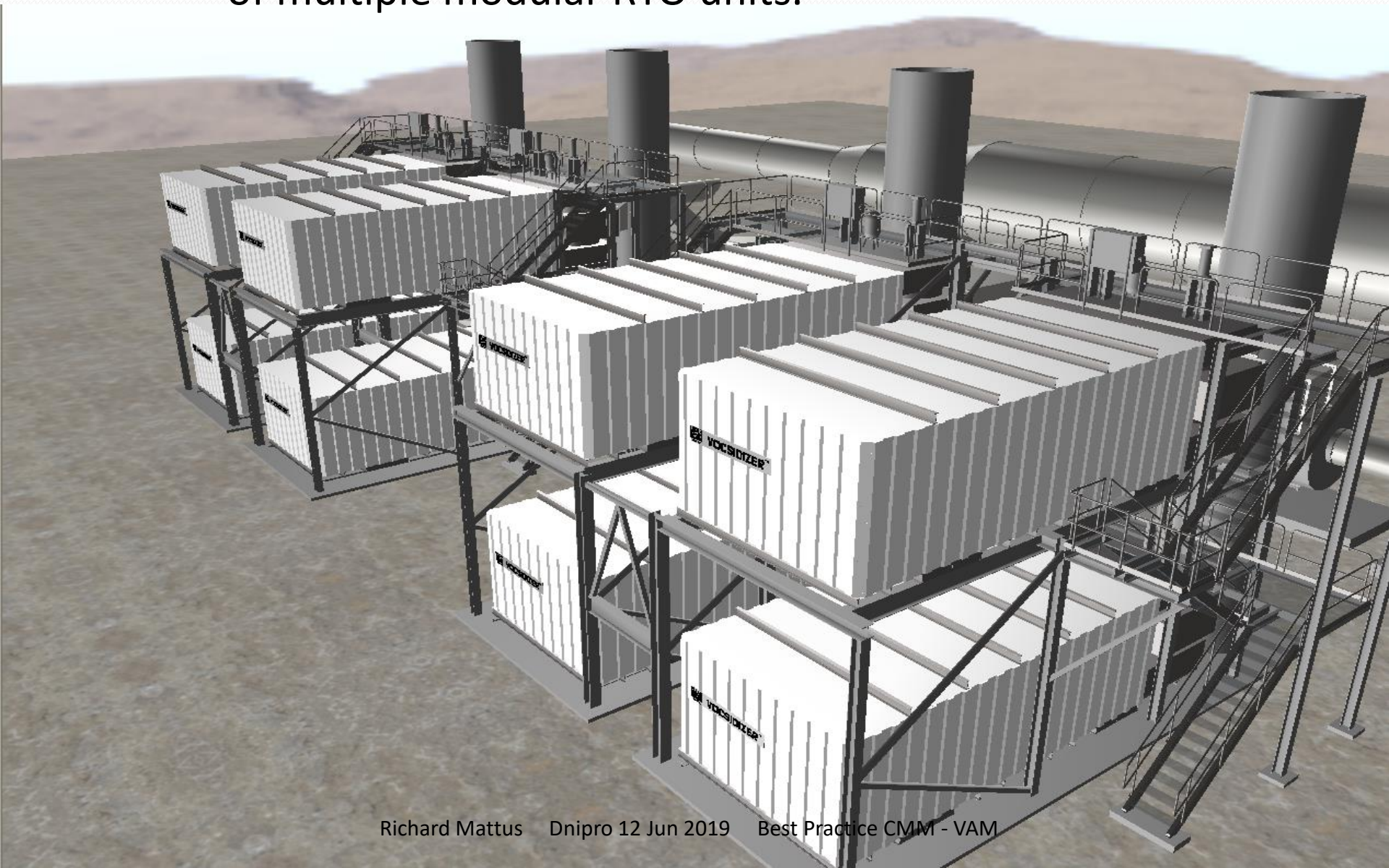

GUIDE LINES

VAM Energy Recovery with RTO's as boiler units

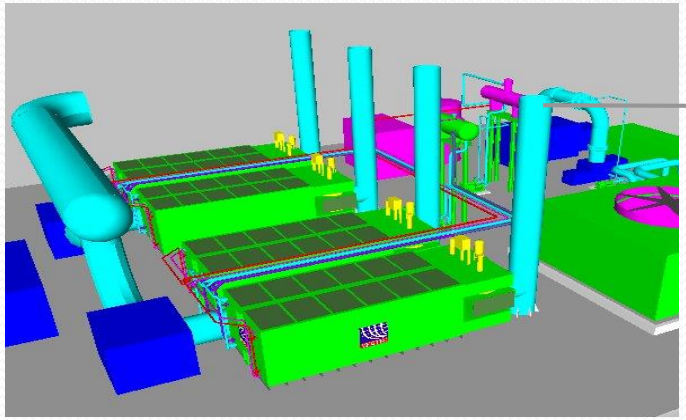

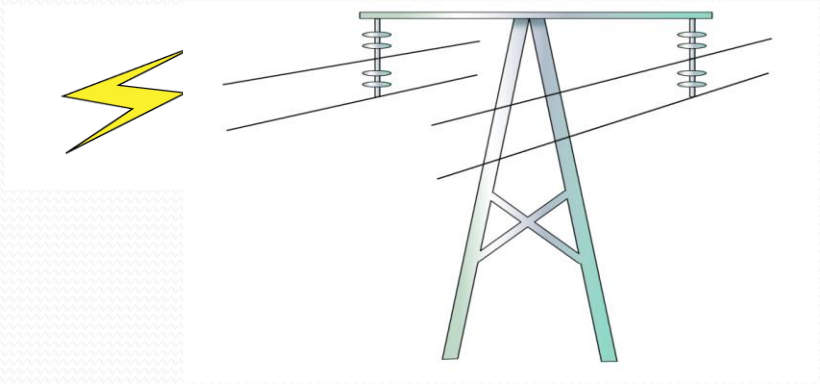

0.2 % methane needed to maintain oxidation.
Energy of concentrations above 0.2 % can be recovered.

Example: *800 000 m³/h*, *1 % CH_4* → *72 MW(th)* → *21 MW(el)* *(at 30% efficiency)*

Example: *800 000 m³/h*, *0.6 % CH_4* → *36 MW(th)* → *10 MW(el)* *(at 30% efficiency)*

GUIDE LINES

Cogeneration of electricity and heating – plus cooling

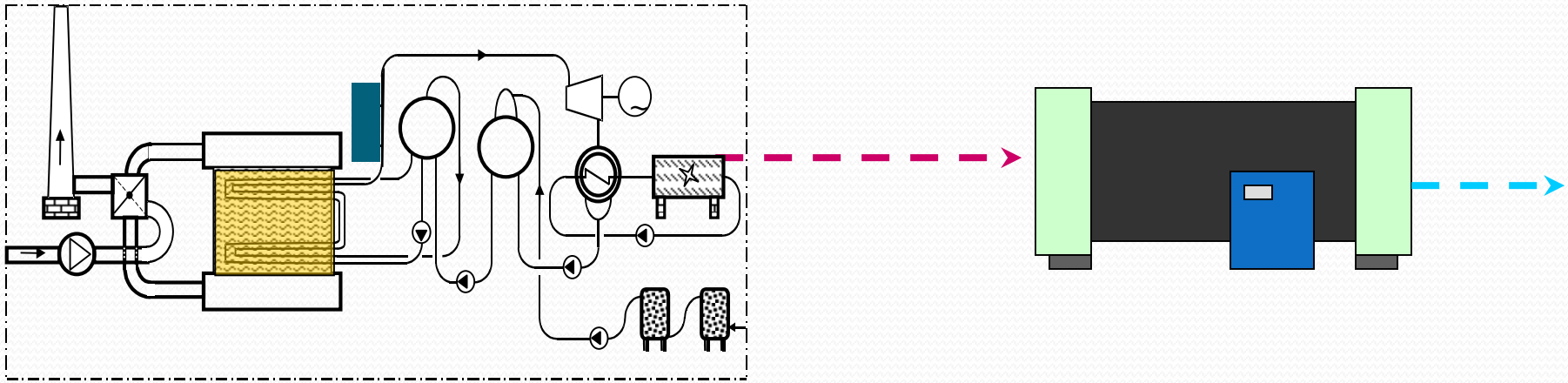

Cooling water from electricity generation drives absorption chiller

Example:

800 000 m3/h
1% methane → *72 MW(th)* → *21 MW(el)* → *19 MW(el) + 38 MW(cool)*

GUIDE LINES

Hot water from VAM (thermal energy)

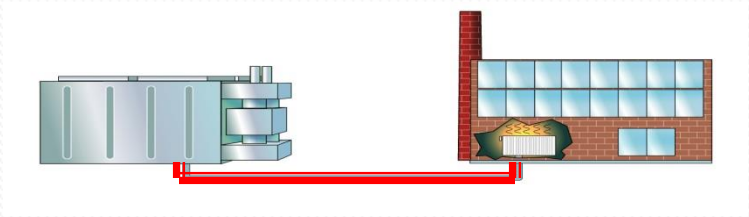

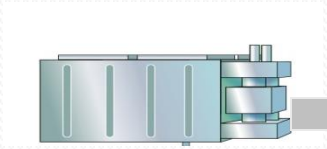

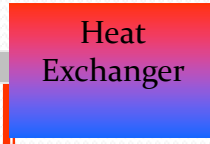

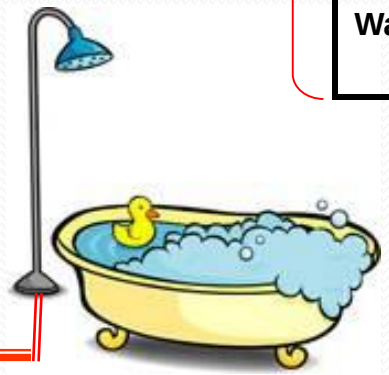

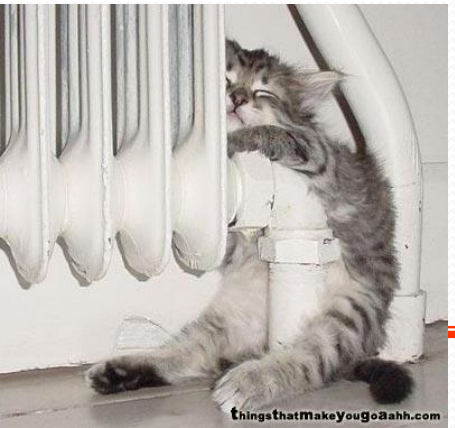

	0.3%	0.6%	0.9%
Heat straight from bed. **Water at 70 - 150^{oC}**	3 MW	11 MW	18 MW
-- - *For each 250 000 Nm3/h of ventilation air* - - -			
Secondary heat-exchanger. **Water at 70oC**	1 MW	8 MW	15 MW
Secondary heat-exchanger. **Water at 150oC**	-	2 MW	10 MW

GUIDE LINES

Electricity from VAM (electrical energy)

	0.3%	0.6%	0.9%
Heat straight from bed. **Water at 70 - 150^{oC}**	3 MW_{th} = ½ -1 MW_e	11 MW_{th} = 3 -4 MW_e	18 MW_{th} = 5 - 6 MW_e
-- - *For each 250 000 Nm3/h of ventilation air* - - -			

For large size plants, conversion from thermal to electrical energy can be expected to be around 30%, and lower for smaller plants.

GUIDE LINES

Calculations of CO2e from VAM processing

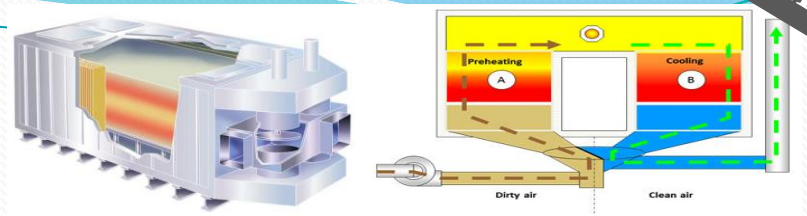

Examples:

250 000 Nm3/h @ 0.9 % VAM comes to 240 000 tonnes of CO2e

125 000 Nm3/h @ 0,9 % VAM comes to 120 000 t CO2e

125 000 Nm3/h @ 0,3 % VAM comes to 40 000 t CO2e

VAM conc'n / Nm3/h vent air	0.3 %	0.6 %	0.9 %
125 000	***40***	***80***	***120***
250 000	***80***	***160***	***240***
500 000	***160***	***320***	***480***
1 000 000	***320***	***640***	***960***

Annual emission reductions in thousand tons of CO2e

GUIDE LINES

VAM project economics indications

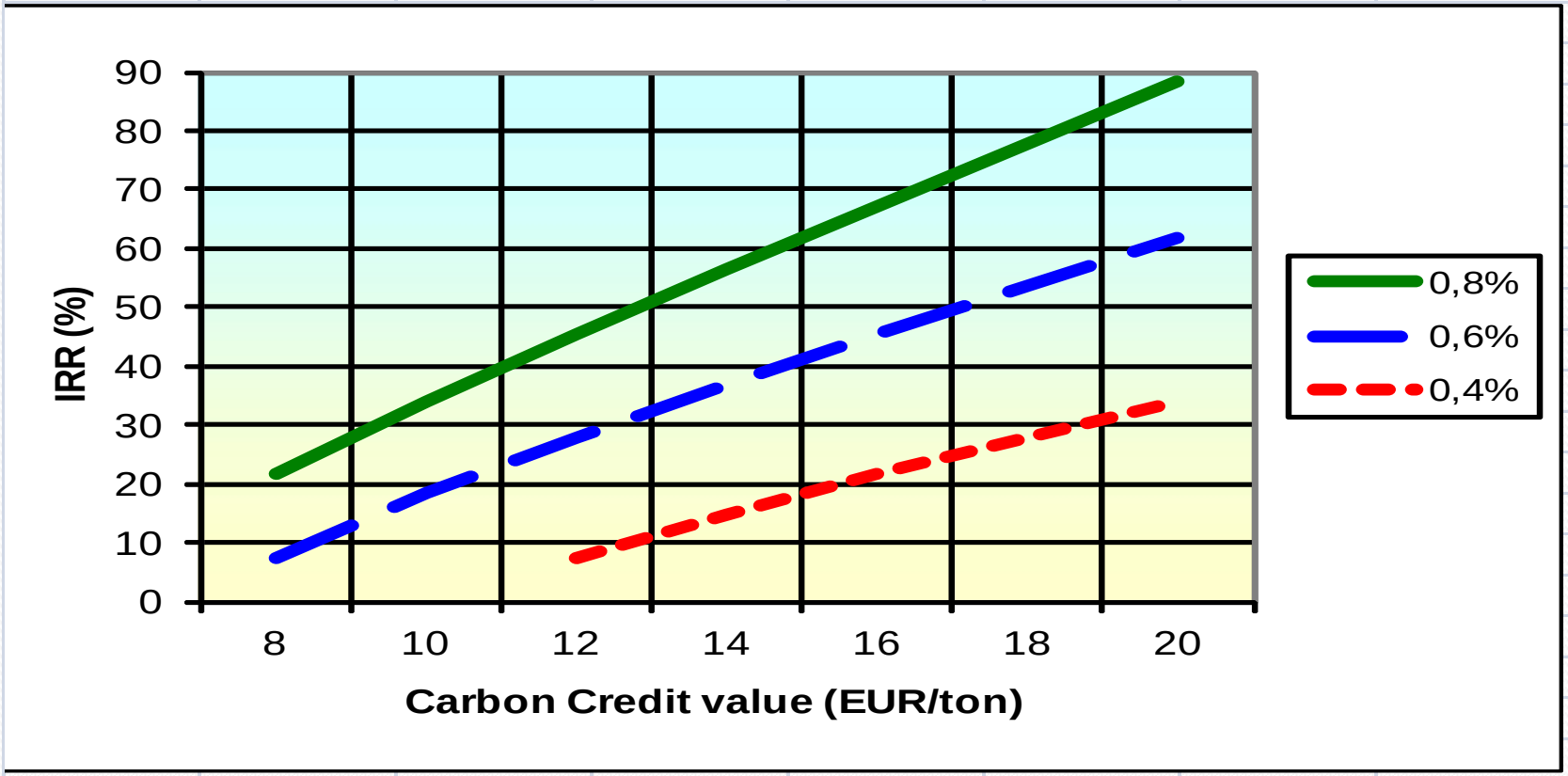

CONCLUSIONS for reasonable/good pay back:

- VAM concentrations should be min ½ percent
- Carbon Credits should be minimum EUR 10/t CO_{2e}

RTO for PROCESSING VAM

JUNE 2019

1. RTO is so far the only proven VAM technology.
2. Besides VAM installations,
   there are thousands of industrial RTO installations.

3. With a value on reducing methane emissions,
   VAM projects can be very profitable.
4. With a steady VAM concentration above 0.5 %,
   VAM processing can provide heating, cooling and electrical power.