Federal Research Center of Coal and Coal Chemistry
Siberian Branch of Russian Academy of Sciences

Applying Hydrodynamic Stimulation for Controlled Roof Caving and Increasing Degasification Efficiency of Coal Seams in Underground Coal Mining

The research was carried out due to the grant of Russian Science Foundation (project #17-17-01143)

Oleg V. Tailakov

Workshop
on Best Practices in Coal Mine Methane Capture and Utilization
Ankara, Turkey

10 June 2019

Content

Introduction

- Coal production in Russian Federation reached 439.1 mln tonne in 2018
  - 108 mln tonne – underground mining
  - Main technology - longwall mining
- In major coal basins of Russian Federation coal is very tie and has high gas content (up to 25 m3/tonne)
- Hard roof issues
- Coal and methane outburst can lead to a sharp increase in the concentration of methane in the mine atmosphere and to the formation of conditions for explosions of methane and coal dust
- Modern geophysical methods could be used for forecasting of hazardous areas applying directly in the coal mines
- These studies may include:
  - defining of the filtration properties of coal seams by conducting injection tests in the mines
  - collecting coal samples in the mines and determination of gas content of coal seams
  - seismoacoustic survey of coal seams from mine workings

Directional Fracturing of the Roof

Technological operations

Drilling of Boreholes

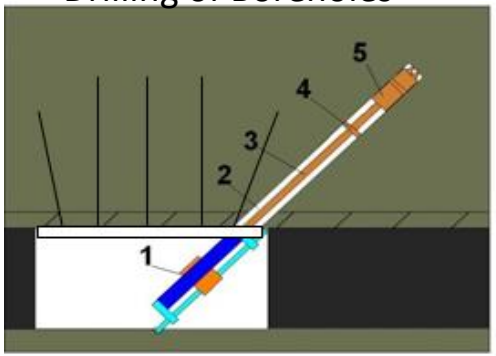

Cutting the Initiating Crack

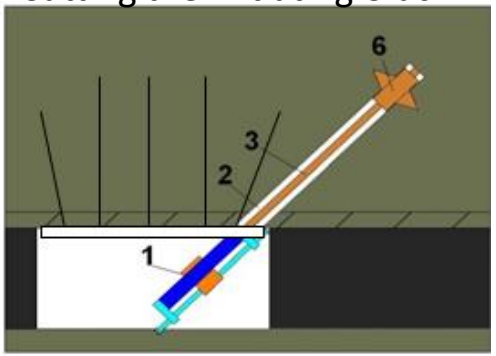

Fracturing

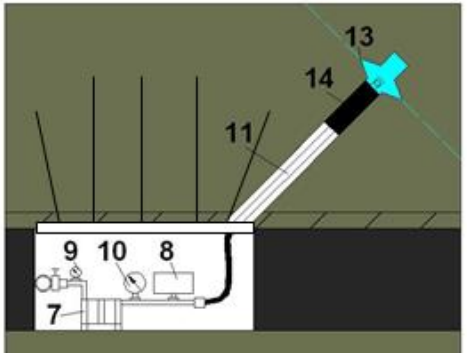

1- Drilling Rig; 2 – Borehole; 3 – Drilling Rod; 4 - Guide head; 5 – Drilling Bit; 6 – Injector; 7 – Water Pump; 8 – Recorder; 9 – Flowmeter; 10 – Manometer; 11 – Pipeline; 13 – Injector; 14 – Packer

Discharge of longwall face

Artificial Fracture Borehole with Initiating Crack

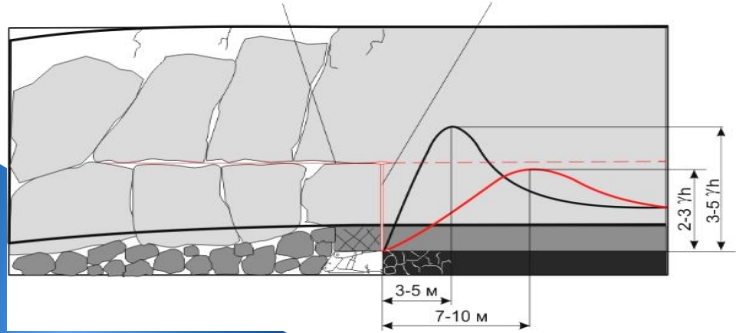

Equipment

Injector

Water Pump

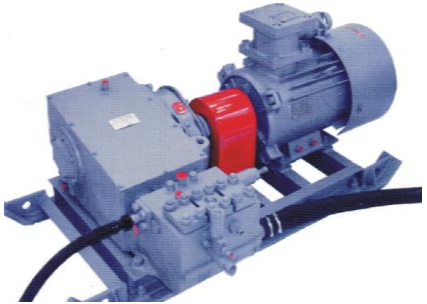

Packer

Hydrofracturing of the Coal Seam

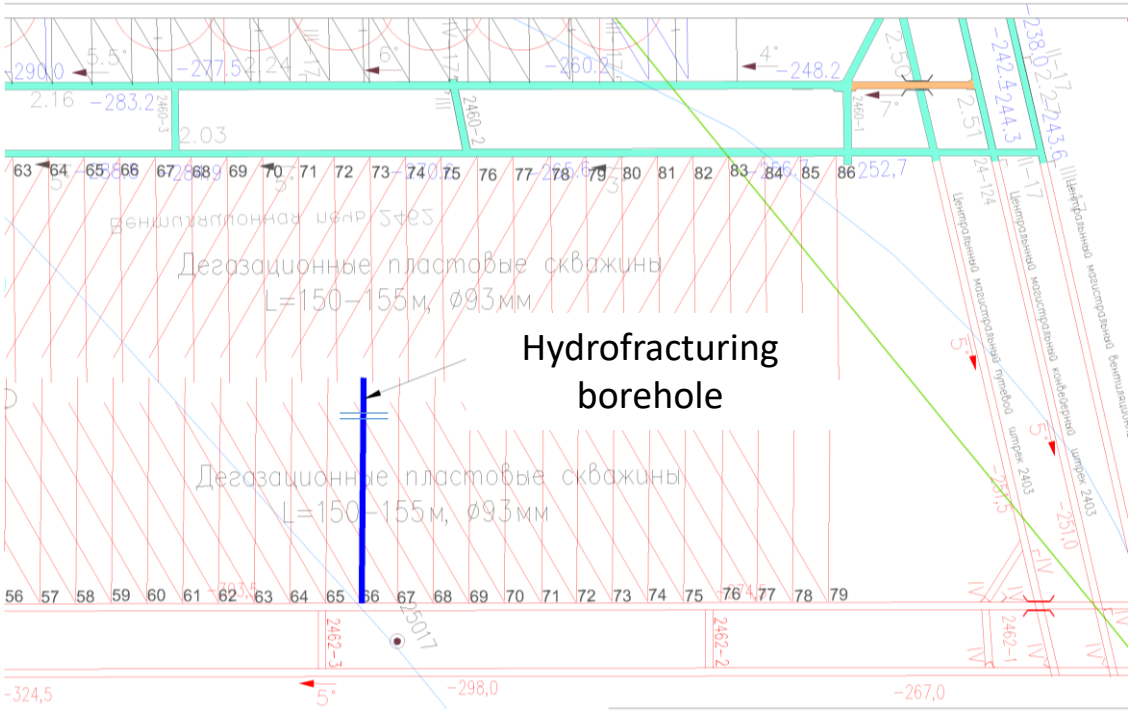

- A horizontal borehole for hydrofracturing is drilled directly from the mine workings into the coal seam
- Diameter of the borehole is 93 millimeters; length is 140 meters
- A packer is used to seal the borehole sections
- Hydraulic fracturing is performed at two intervals with a step of 4.5 m

Coal Seams Permeability Measurement

Peculiarities

- A chamber was designed and manufactured in a form of reinforced rubberized hydraulic hose with a sealed threaded connection on the other side
- A pre-programmed electronic self-contained manometer is placed in the chamber and is connected to a borehole water supply system for recording pressure changes caused by hydrodynamic impacts

3-D View of Coal Seam Permeability

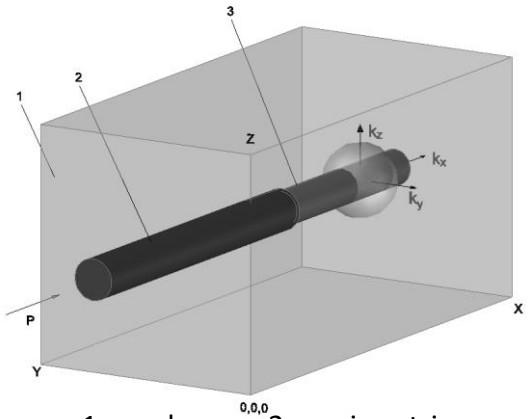

1 - coal seam; 2 - casing string;
3 - borehole uncased part

Scheme of the Measurement

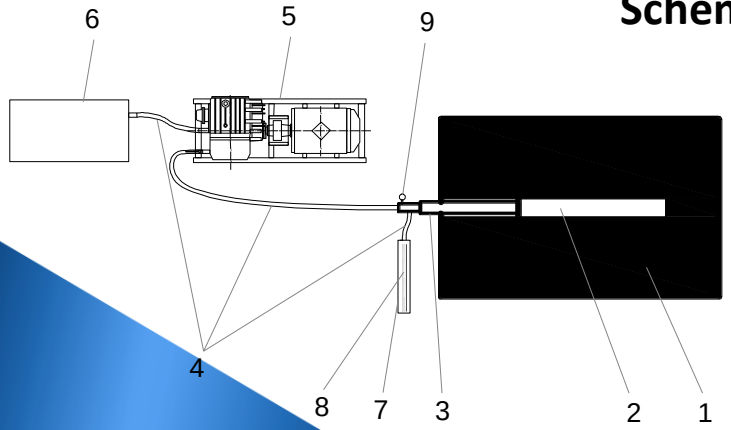

1 - coal seam;
2 - test borehole;
3 - casing;
4 - high pressure hose;
5 - pumping station;
6 - water tank;
7 - metal flask;
8 - autonomous pressure gauge;
9 - mechanical pressure gauge

Parameters	Value
Flow rate (l/min.)	300
Pressure (MPa)	30
Volume of Water Tank (l)	2000
Engine Power (kWt)	90

Parameters of the Hydrofracturing

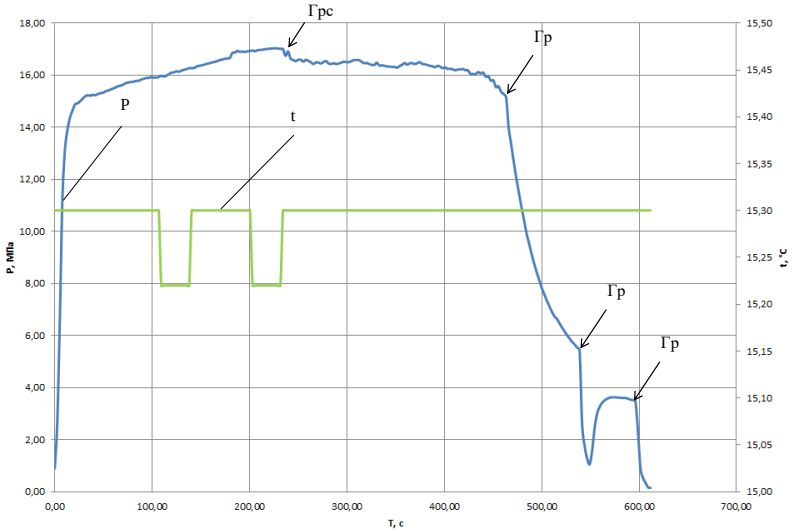

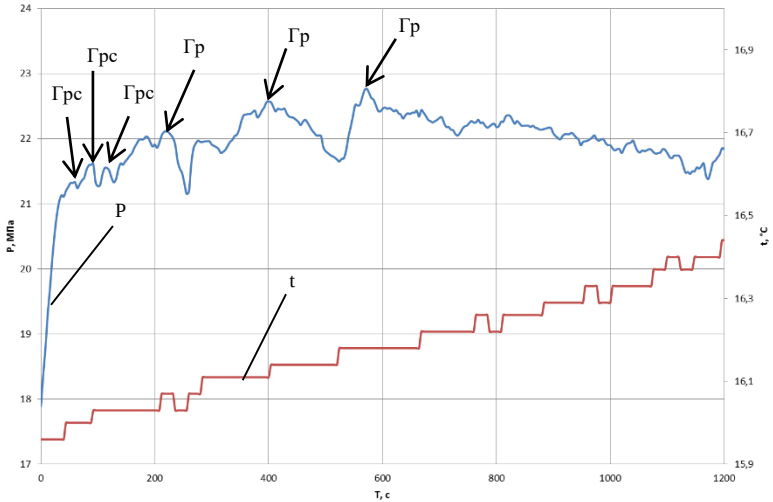

Water Pressure

Грс: 17.0 MPa
Гр: 15.6 MPa; 5.44 Mpa; 3.50 MPa
Water leakage through the wall of the working

Грс: 21.33 MPa; 21.6 MPa; 21.55 MPa
Гр: 22.12 MPa; 22.57 MPa; 22.77 MPa

Results of the Permeability Measurement

Monitoring injection fall-off test in a borehole drilled from a mine entry

Before Stimulation

k_x = 19.17 mD
k_y = 11.48 mD
k_z = 23.51 mD

After Stimulation

k_x = 73.91 mD
k_y = 30.20 mD
k_z = 4.16 mD

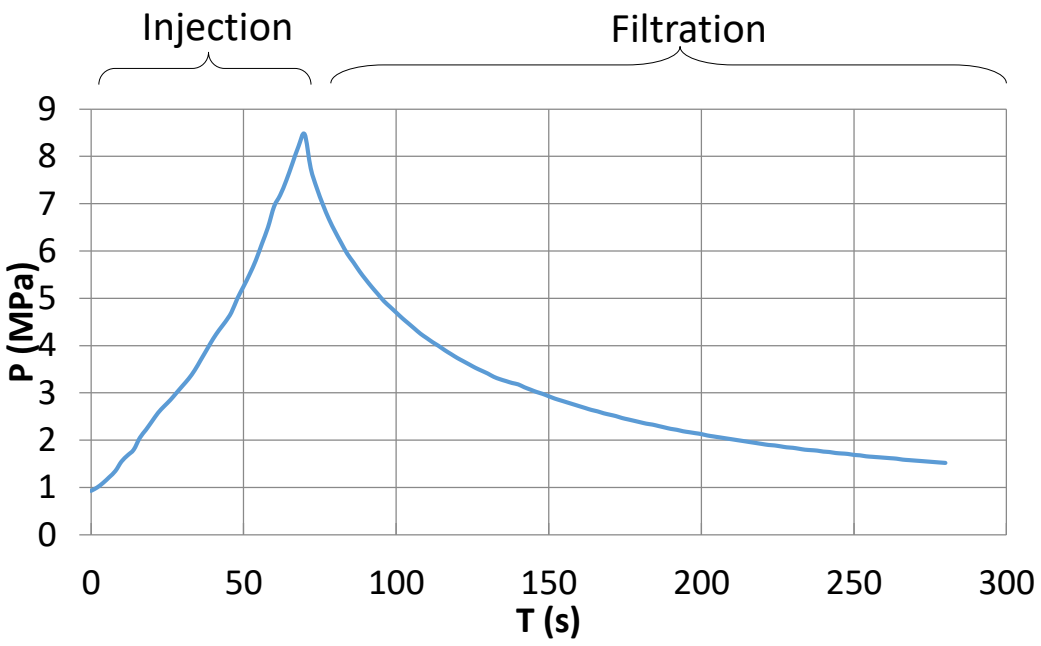

Desorption Tests

Open-type Core Samplers

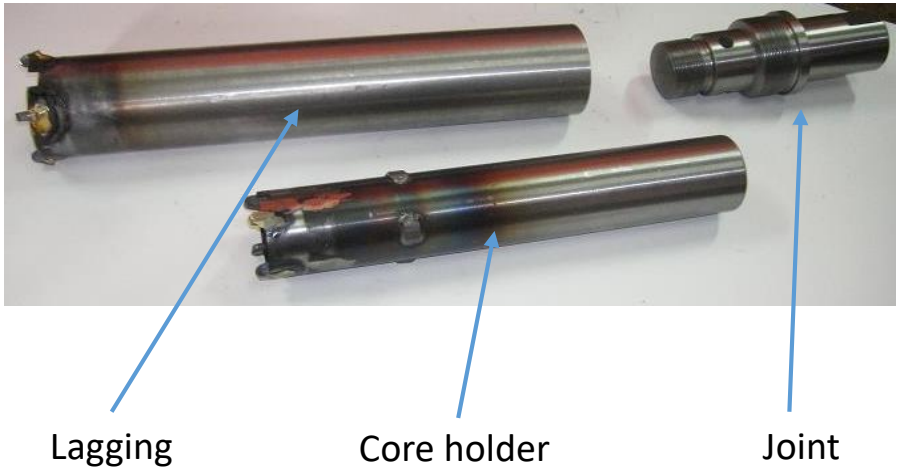

Dependence of a coal sample drilling time (T_d) on a coefficient of coal strength (*f)* for the coal sample obtained in mining conditions from *LFG* grade coal using core samplers of types I-III

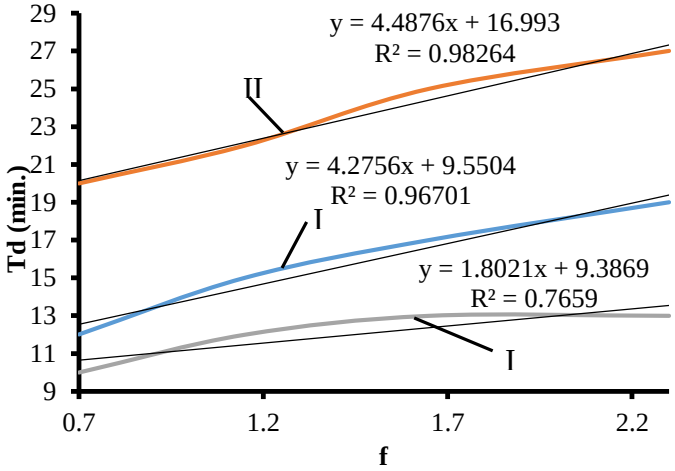

Results of the Tests

Estimate of coal seams degasification efficiency on the basis of direct method

Mine	Coefficient of degasification efficiency	In-situ gas content (m^3/t dry ash free mass)	Residual gas content (m^3/t dry ash free mass)
A	0.9-0.85	9-14	1.2-2.1
B	0.01-0.1	9-11	8.7-8.9
C	0.9-0.6	17-20	2.0-7.6
D	0.9-8.4	18-20	1.0-3.2

Desorption of methane from coal samples of *LFG* grade, selected in mine entries of Kuzbass mines

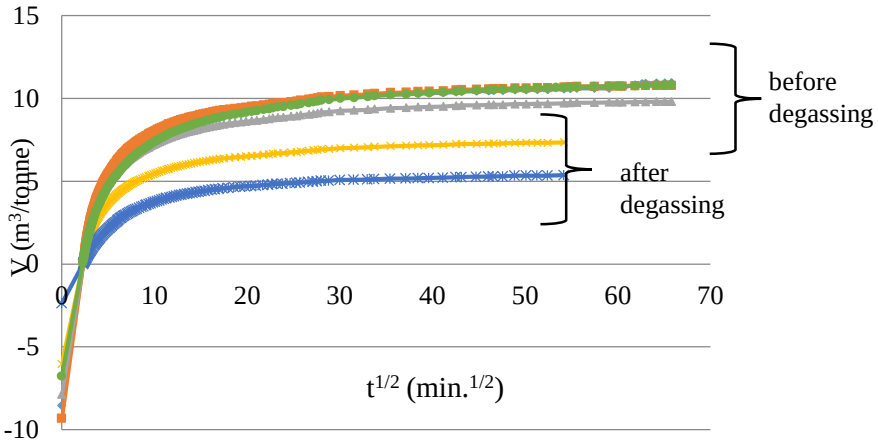

Effectiveness of coal seams degasification

$$K_d = \frac{c - c'}{c}$$

$\chi_п$ – in-situ gas content of a coal seam, (m^3/t) ; $\chi'_п$ – gas content after coal seam degasification (m^3/t)

Seismological Survey in Mines Entries

Set of the Seismological Stations

- Allowed to use in underground conditions
- Connected via radio channel
- Time is synchronized on the surface before the measurements in the mine's entries

Direct and Transmitted Waves

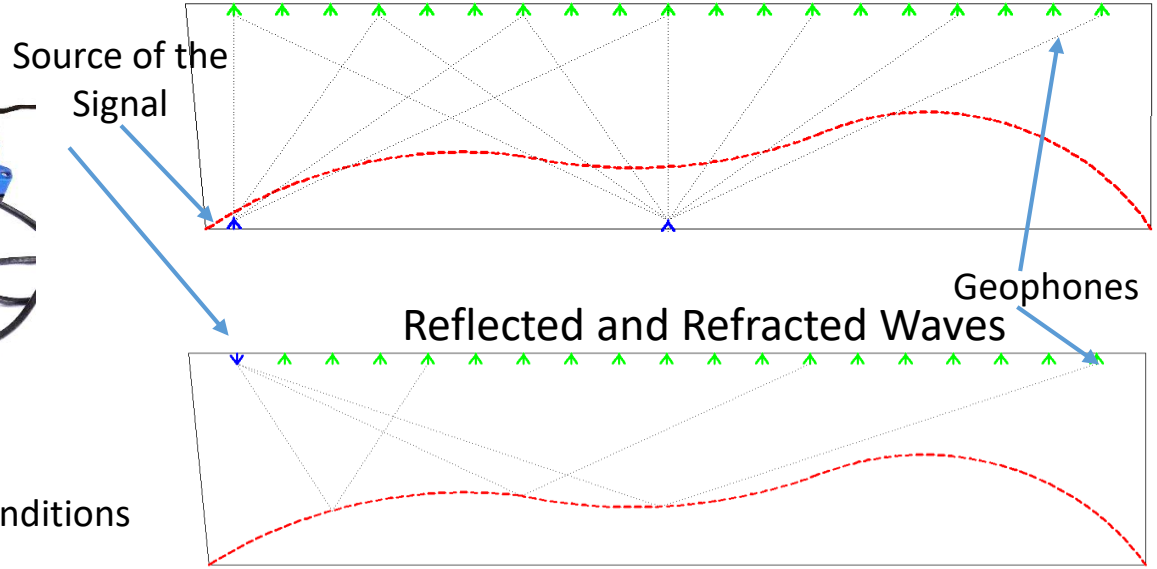

Distribution of Wave Velocity

Before Hydrofracturing

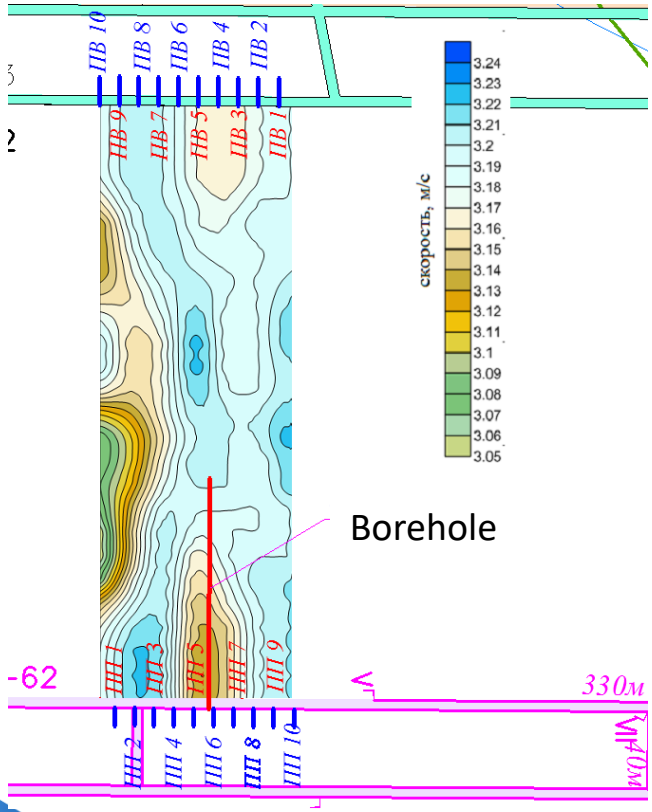

After Hydrofracturing

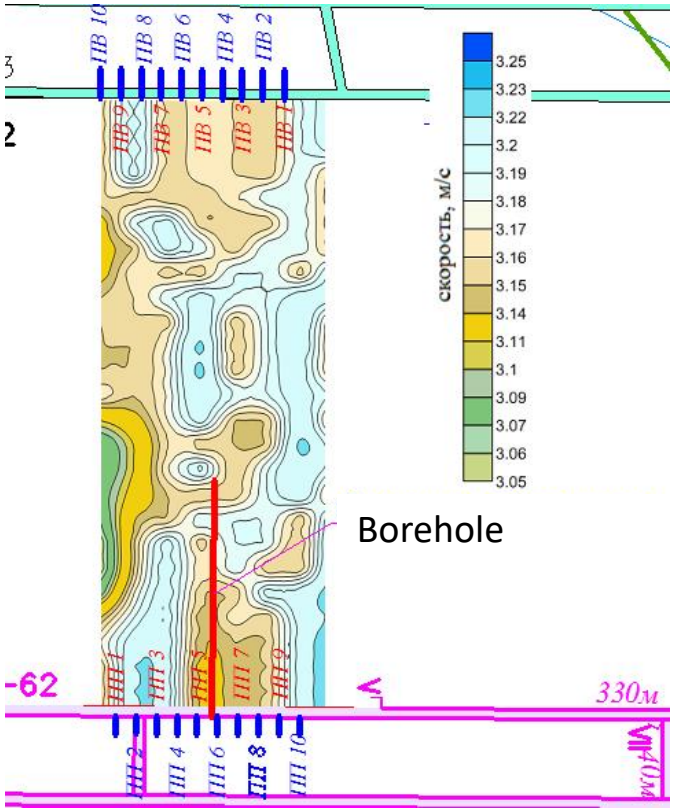

Interpretation of the Seismological Survey Results

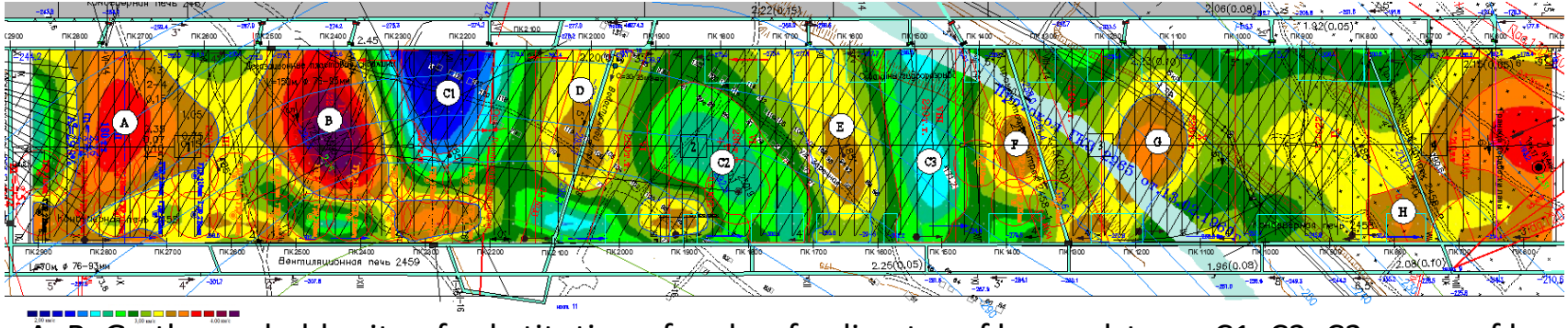

A, B, G - the probable site of substitution of rocks of a direct roof by sandstone; C1, C2, C3 - zone of low speeds, characterized by increased moisture content; D, E, F, G - influence of the entries

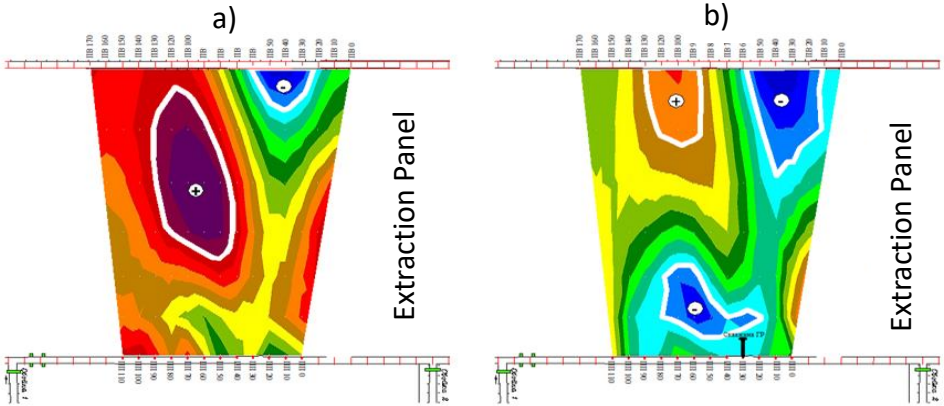

Changes in the seismic waves propagation rates in the coal-bearing strata:

a) before fracturing

b) after fracturing

Suggestion for the Cooperation

TÜBİTAK

FASIE
Foundation for Assistance to Small Innovative Enterprises

13 Mart - 31 Mayıs 2019 tarihlerini kapsayacak şekilde başvuruya açılan 2590 - FASIE İkili İşbirliği Destek Programı başvuru süresi 01.07.2019 saat 17:30'a kadar uzatılmıştır.

The application period for the 2590 - FASIE Bilateral Cooperation Support Program was extended until 01.07.2019

Potential Turkish-Russian Scientific Project

Geomechanical Justification of the Hydrodynamic Impact on the Coal Seam in Underground Conditions for Unloading the Rock Massif and Increasing Gas Recovery

Partners:

- Russia - Federal Research Center of Coal and Coal Chemistry of SB RAS
- Turkey – University/Scientific Foundation. Interested parities welcomed

Conclusions

- Direct measurements of the gas content and permeability of coal seams along with their seismological survey in underground mines are feasible and could be efficiently applied to control the hydrodynamic stimulation of coal seams and above lying strata
- The results of the geophysical measurements could be used for the following:
  - Control of the hydrofracturing
  - Prediction of the coal and methane outburst
  - Improving degasification systems
  - Increasing efficiency of the ventilations systems
  - Monitoring process of the hydrofracturing of the coal seams

Oleg V. Tailakov
Deputy Director of Institute of Coal
Federal Research Center of Coal and Coal Chemistry
Siberian Branch of Russian Academy of Sciences
Doctor of Technical Sciences, Professor
10, Leningradsky Ave.,
Kemerovo, 650065
Russian Federation
e-mail: tailakov@uglemetan.ru
Phone: +79039070611